BRUSHLESS
POWERED
READY-TO-RUN

DC10
DRIFT CAR

1:10 SCALE 2WD ELECTRIC
READY-TO-RUN DRIFT CAR



TEAM ASSOCIATED

33 TIME ASSOCIATED

60th Anniversary ASSOCIATED Since 1964

1:10 Scale Ready-To-Run RWD Electric Drift Car Manual

WeAreAE

CHAMPIONS by DESIGN

AssociatedElectrics.com

TEAM ASSOCIATED

:: Introduction

Thank you for purchasing this Team Associated product. This assembly manual contains instructions and tips for building and maintaining your new vehicle. Please take a moment to read through the manual and familiarize yourself with the steps. We are continually changing and improving our designs; therefore, actual parts may appear slightly different than the illustrations. New parts will be noted on supplementary sheets located in the appropriate parts bags.
Check each bag for these sheets before you start to build.
Check www.rc10.com for the latest versions of our instruction manauls.

:: DC10 RTR Features

- 2.4GHz 4-channel radio with digital frequency hopping system
- High Quality fully adjustable Gyro included
- High-speed metal gear servo
- Smooth and reliable Reedy 3300kV brushless motor
- Water-resistant high-power Reedy brushless speed control with T-plug connector and LiPo low voltage cutoff
- Exclusive Team Associated Grey Material throughout
- Threaded oil filled fully adjustable shocks
- Adjustable wheel hexes allow the track width to accommodate a wide variety of body and wheel combination.
- A convenient quick-release battery box gets you back into the door-to-door tandem action.
- With camber, caster, toe-in, KPI, and more, there are near infinite suspension tuning options.
- Low motor Configuration
- Adjustable servo mounting locations on upper deck for the perfect weight balance.
- Maximum / adjustable Steering throw provides superior control through drifting turns

:: Additional

Your new DC10 RTR requires the following items for completion (refer to AssociatedElectrics.com for suggestions):

- AA-size batteries for transmitter
- Battery charger (a peak detection charger, or LiPo compatible charger)
- 2-cell LiPo battery pack

:: Other Helpful Items

- Silicone Shock Fluid (Refer to AssociatedElectrics.com for complete listings)
- FT Body Scissors (#1737)
- FT Hex/Nut Wrenches (#1519)
- FT Universal Tire Balancer (#1498)
- FT Dual Turnbuckle Wrench (#1114)
- FT Body Reamer (#1499)
- Needle Nose Pliers
- Calipers or a Precision Ruler
- Green Slime shock lube (#1105)
- Shock Pliers (#1681)
- FT Ballcup Wrench (#1579)
- Soldering Iron
- Wire Cutters
- Hobby Knife

:: Hardware - 1:1 Scale View

Button Head (bhcs)

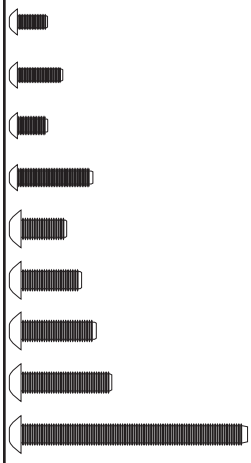

2x4mm (31510)
2x6mm (4672)
2.5x4mm (4673)
2.5x10mm (31522)
3x6mm (31531)
3x8mm (31532)
3x10mm (25211)
3x12mm (89202)
3x30mm (91478)

Cap Head (shcs)



3x45mm (89279)

LP Socket Head (lp shcs)

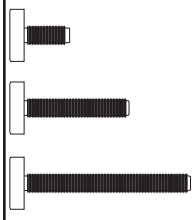

3x6mm (41089)
3x10mm (41090)
3x22mm (41095)

Flat Head (fhcs)

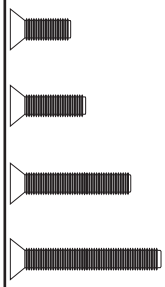

3x8mm (25201)
3x10mm (25202)
3x16mm (25204)
3x20mm (89210)

Set Screws



3x8mm (4670)
4x5mm (25226)

Shims and Washers



5.5x0.5mm (31381)
5.5x1.0mm (31382)
5.5x2.0mm (31383)
3x8mm Washer (89218)

Ball Bearings

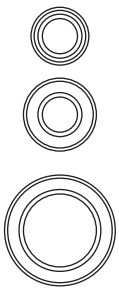

5x8x2.5mm (8680)
5x10x4mm (91560)
10x15x4 (91563)

Ballstuds

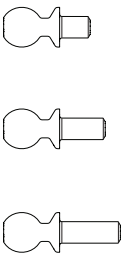

HD 4mm (91451)
Ti HD 4mm (91750)
HD 6mm (91047)
Ti HD 6mm (91751)
HD 8mm (91048)
Ti HD 8mm (91752)

Nuts (lock/plain)



M3 Nut (91477)
M3 Alum. Locknut, Blue (31550)
M3 Locknut, Black (25215)

M4 Locknuts:
Serrated Steel LP (91150)
Serrated Steel (Silver) (91826)
FT Aluminum (Blue) (31551)
Serrated Aluminum (Black) (91738)

Notes:

:: Table of Contents

1..... Cover

2..... Introduction

3.....1:1 Hardware “Fold Out”

4..... Table of Contents

5.....Chassis / Suspension / Bumper Build

7.....Steering Build

10.....Gear Differential Build

11.....Gearbox Build

12.....Battery Tray Build

14.....Front and Rear Hubs Build

16.....Turnbuckles Build

17.....Shocks Build

19.....Misc. Build

20.....Optional High Motor Build

23.....Optional Spool Build

23.....Tuning Tips

24.....Setup Sheet for Polished Tile Track

25.....Blank Setup Sheet

26..... Back Cover

:: Notes



This symbol indicates a special note or instruction in the manual.



This symbol indicates the number of the same part that is required.



This symbol indicates the order within a step to assemble parts.



This symbol indicates there are optional FT parts available



This symbol indicates a Racers Tip.

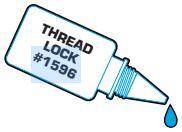

This symbol indicates where Thread Lock Adhesive should be applied. *not included

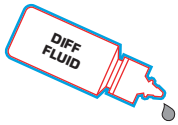

This symbol indicates where Diff Fluid should be applied.

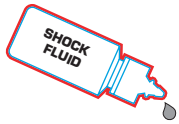

This symbol indicates where Shock Fluid should be applied.



There is a 1:1 hardware foldout page in the front of the manual. To check the size of a part, line up your hardware with the correct drawing until you find the exact size. Each part in the foldout has a number assigned to it for ordering replacement parts.



This symbol indicates where FT Silicone Grease should be applied. *not included

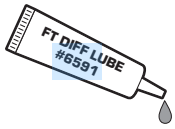

This symbol indicates where FT Diff Lube should be applied. *not included



This symbol indicates where Black Grease should be applied.



This symbol indicates where Green Slime can be applied. *not included

:: Chassis / Suspension / Bumper - Step 1

LEFT SIDE

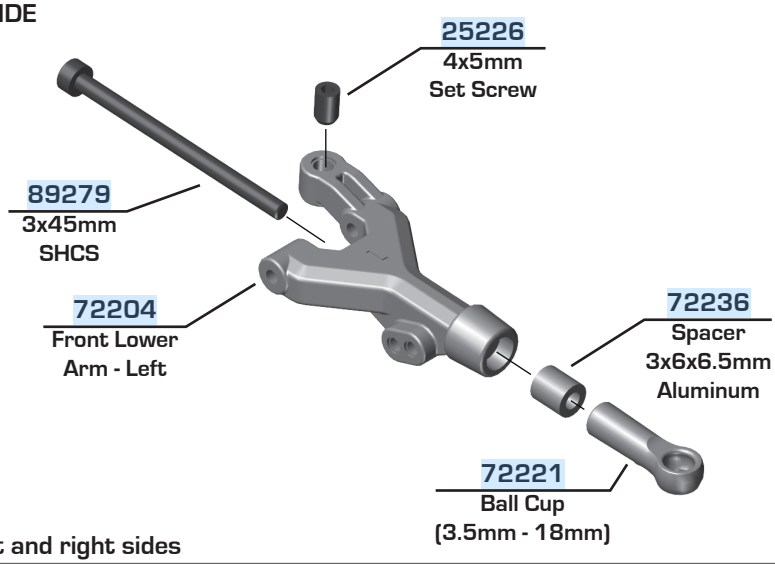

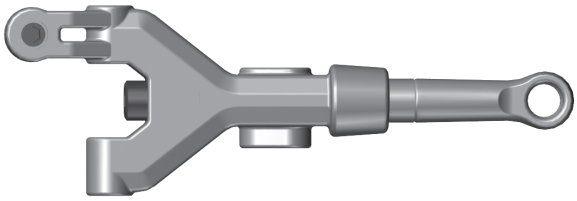

Build left and right sides

:: Chassis / Suspension / Bumper - Step 2

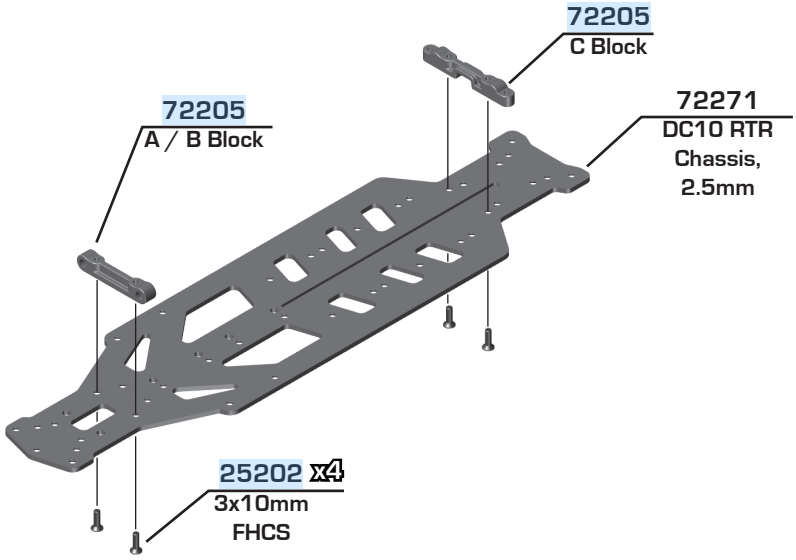

You have the option of using standard 2mm washers or 2mm clips for the inner hinge pins and front / rear arm adjustments

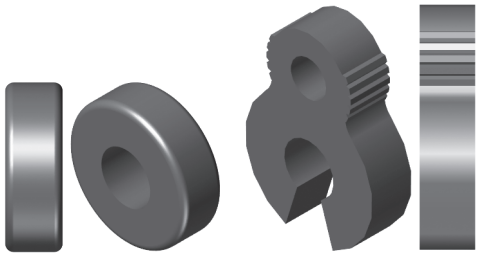

::: Chassis / Suspension / Bumper - Step 3

Factory recommended settings for wheelbase:

Front Arms: Middle
(2mm spacersfront and 2mm spacers rear)

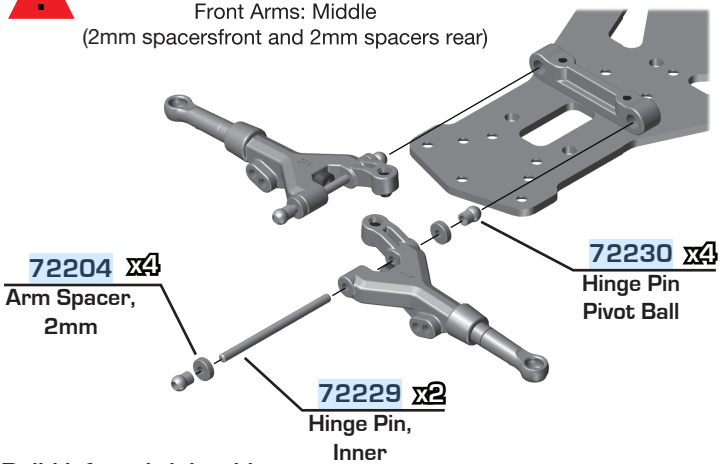

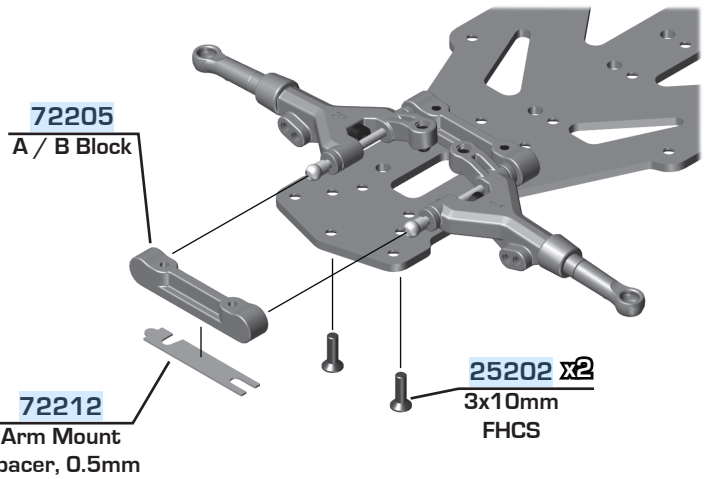

Build left and right sides

Chassis / Suspension / Bumper - Step 4

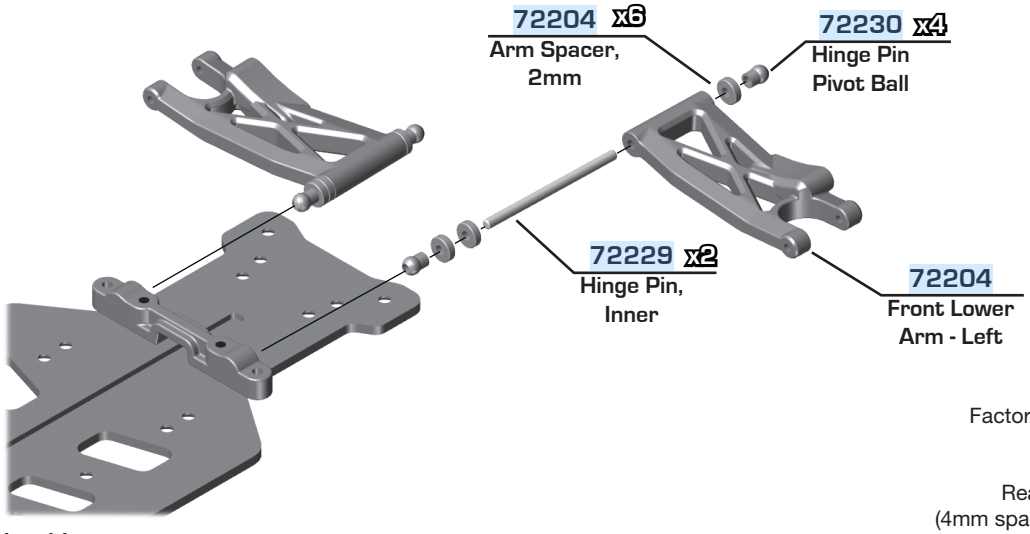

Build left and right sides

Factory recommended settings for wheelbase:

Rear Arms: 2/3 Forward
(4mm spacers towards back and 2mm spacers towards front)

Chassis / Suspension / Bumper - Step 5

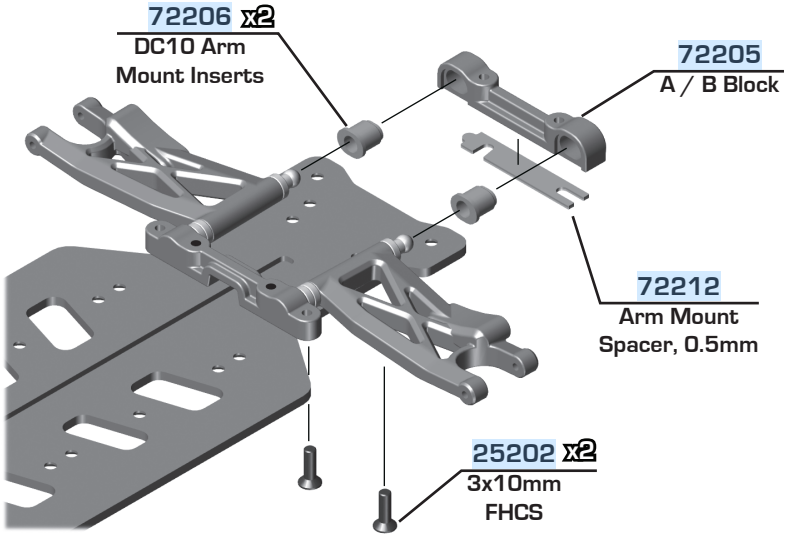

Factory Rear Toe Setting:
1.0 degree - arrow inward.

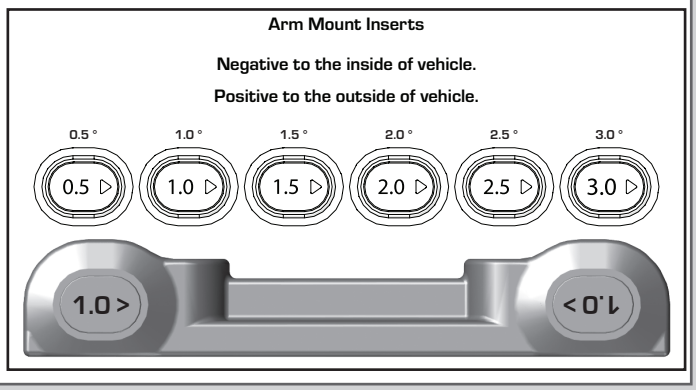

Chassis / Suspension / Bumper - Step 6

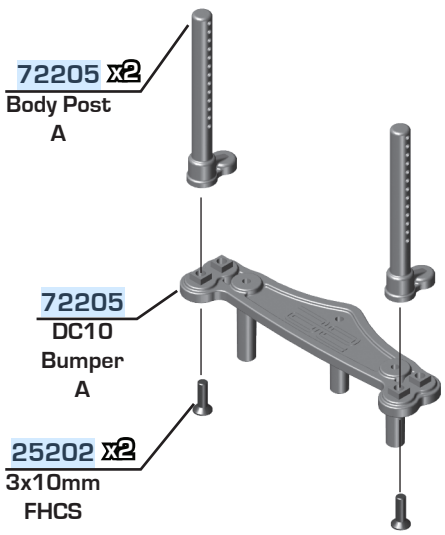

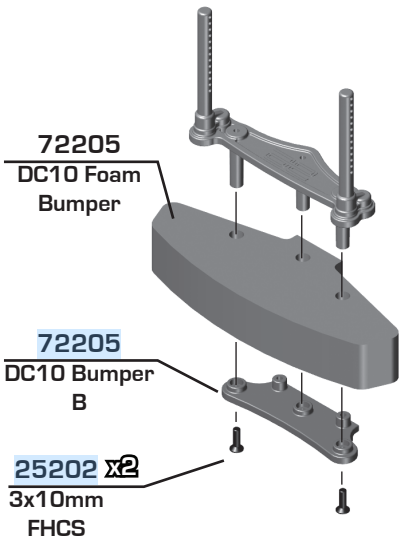

There are two front body post mounting options!

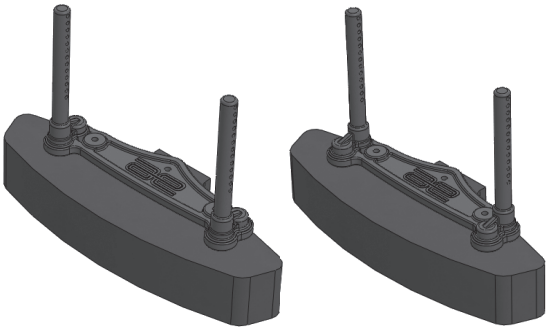

:: Chassis / Suspension / Bumper - Step 7

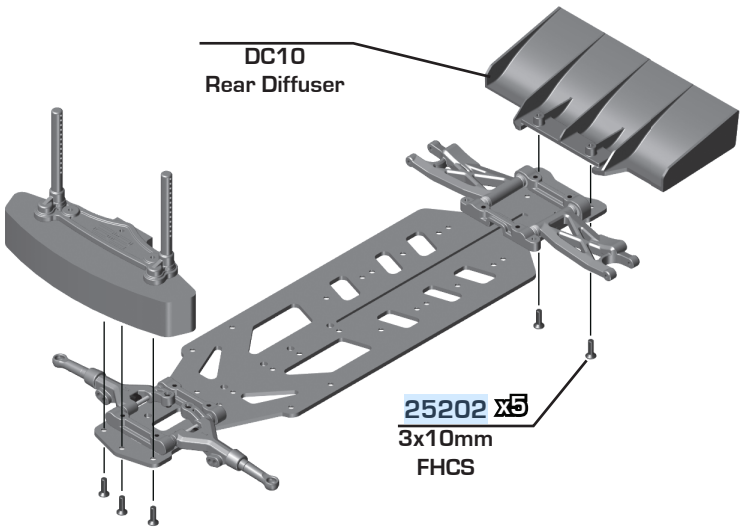

:: Steering Build - Step 1

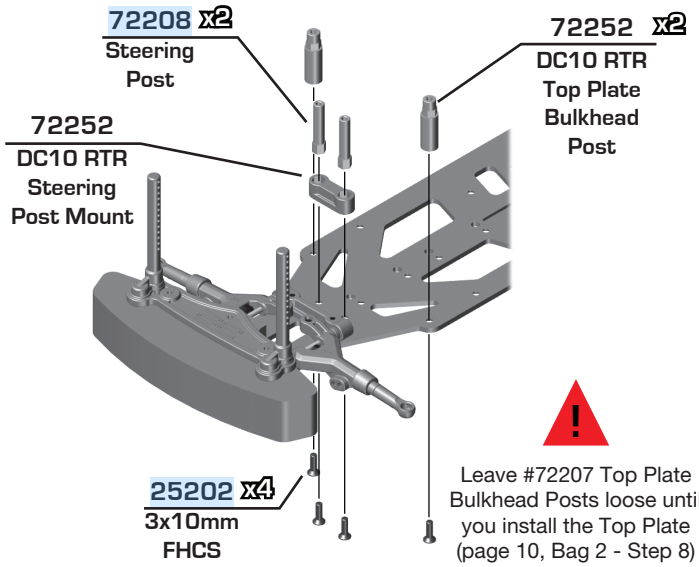

Leave #72207 Top Plate Bulkhead Posts loose until you install the Top Plate (page 10, Bag 2 - Step 8)

:: Steering Build - Step 2

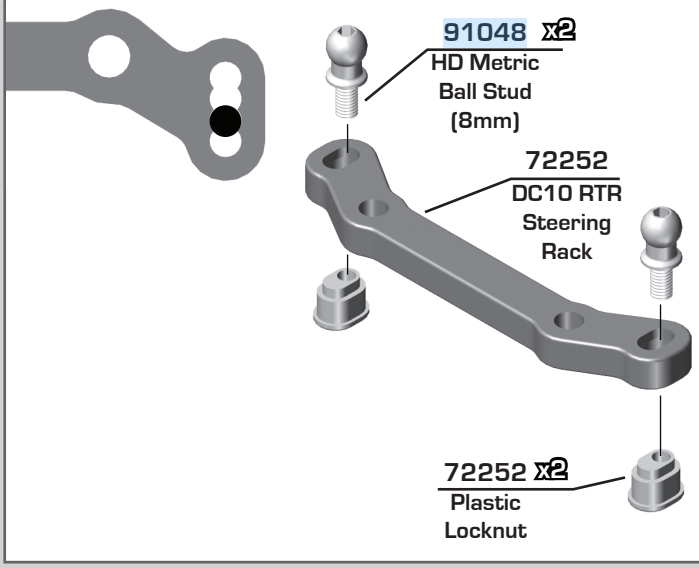

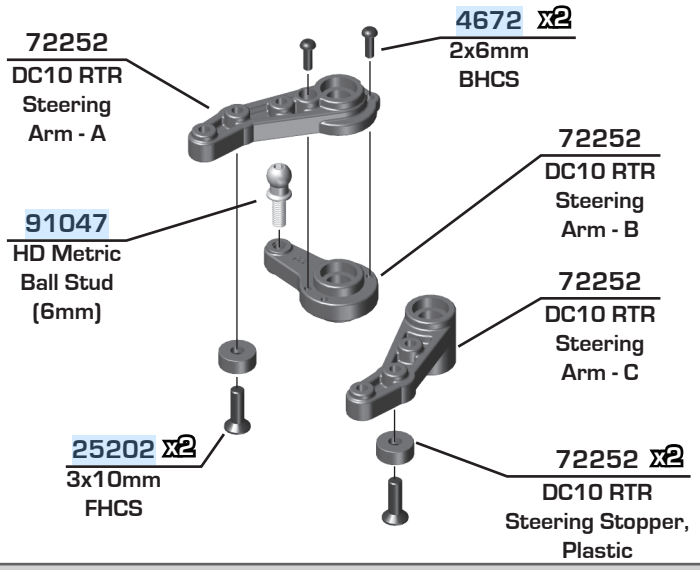

:: Steering Build - Step 3

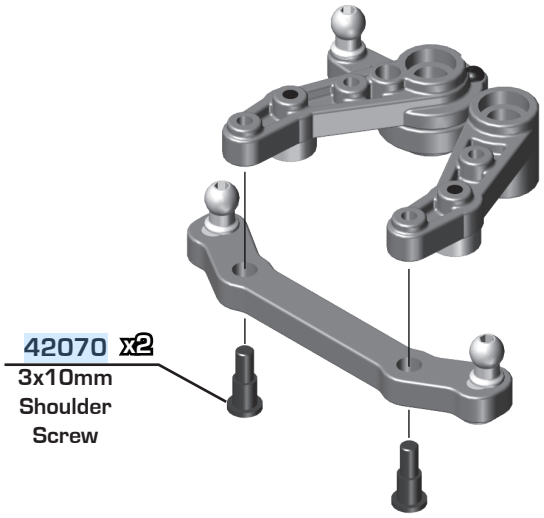

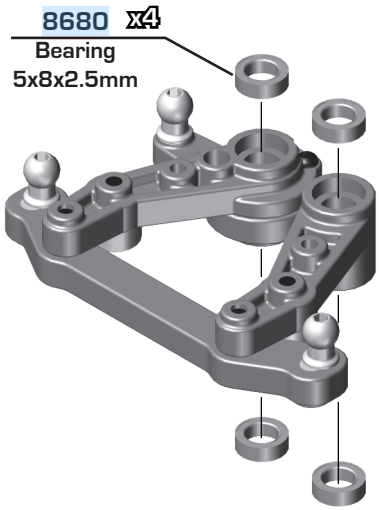

:: Steering Build - Step 4

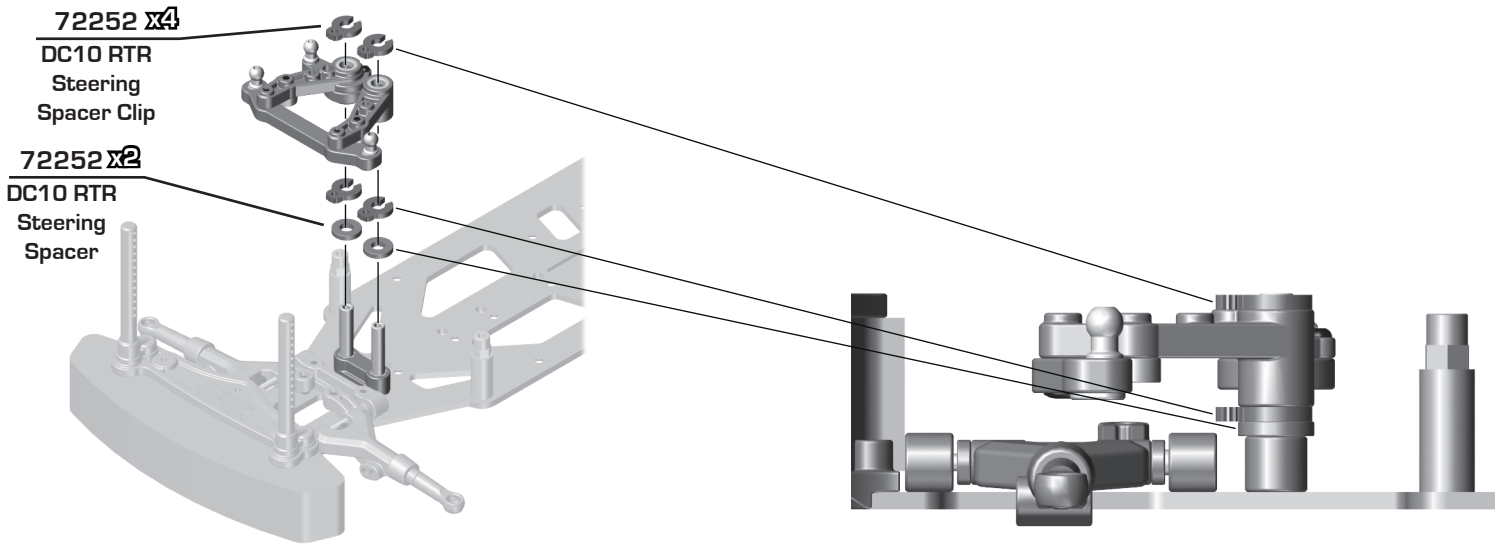

:: Steering Build - Step 5

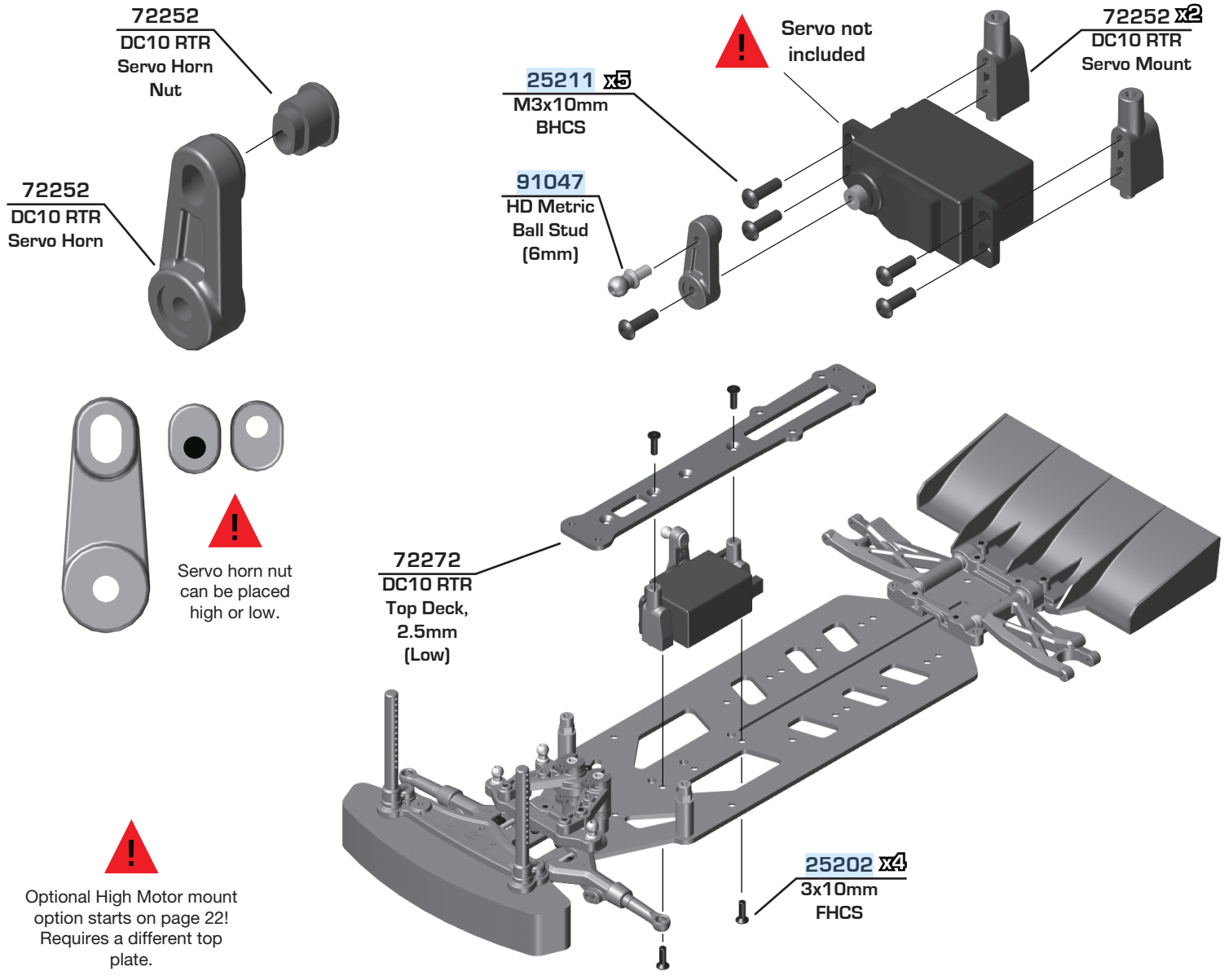

:: Steering Build - Step 6

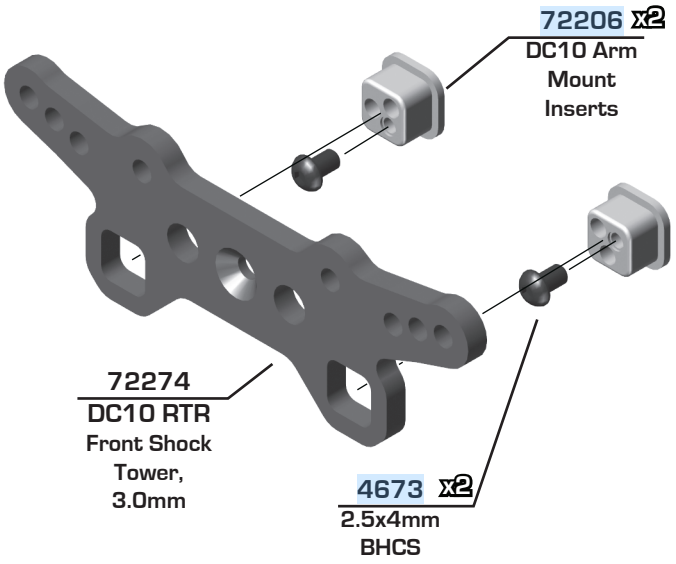

Front Upper Arm Roll Center Adjustment:

This is for roll center and track width. The lower the roll center the more stable the car is. The higher the roll center the more reactive the car is. There are no degree settings here, just roll center adjustment.

"Blue dot designates upper hinge pin location".

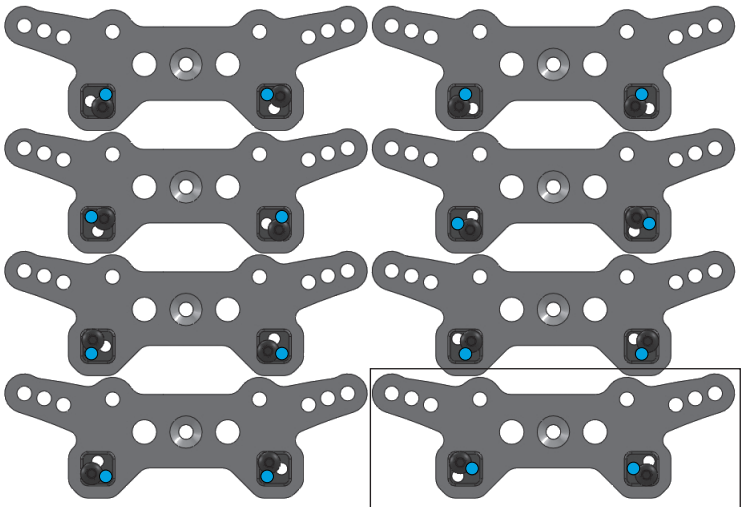

Factory Setting:

:: Steering Build - Step 7

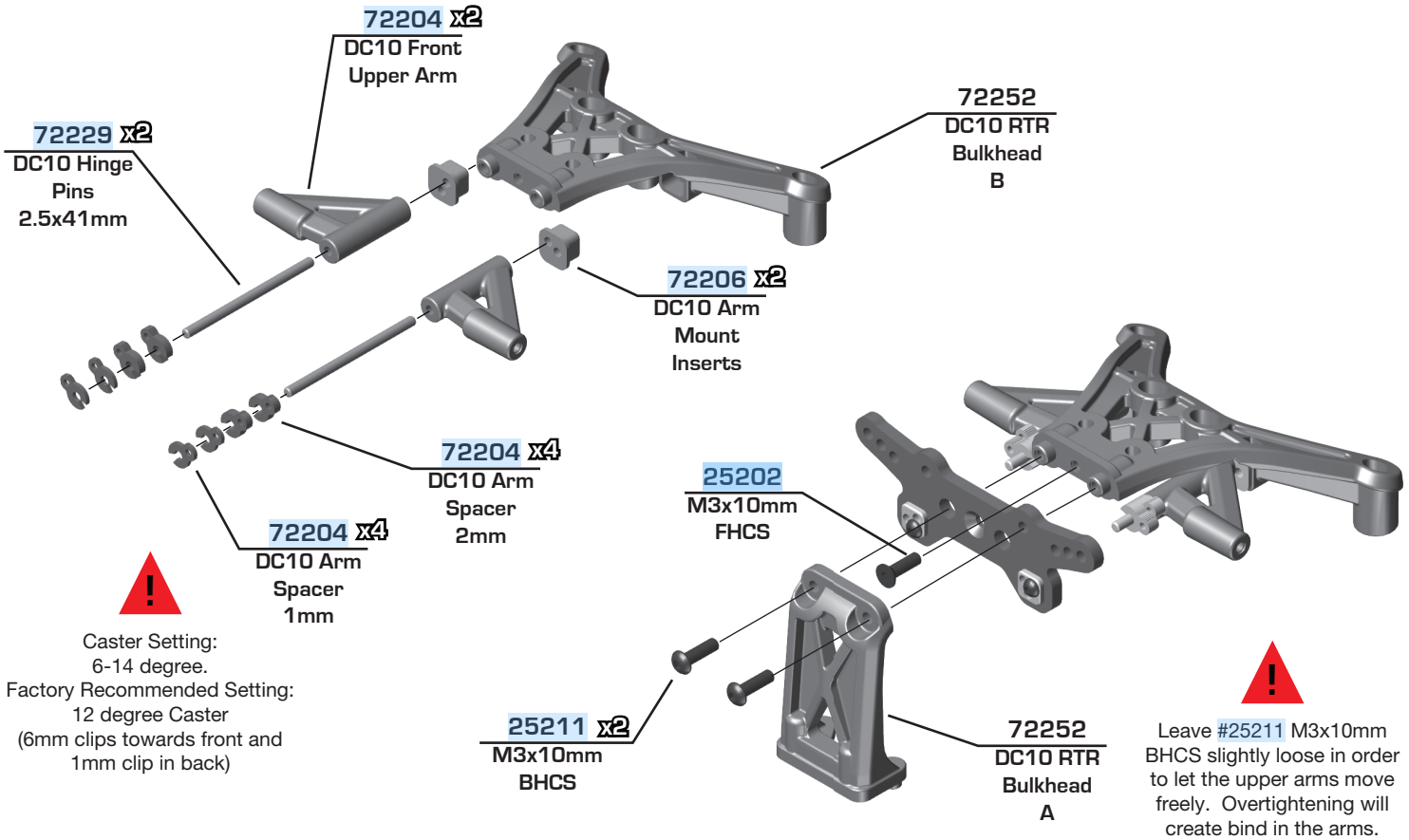

Caster Setting:
6-14 degree.
Factory Recommended Setting:
12 degree Caster
(6mm clips towards front and 1mm clip in back)

Leave #25211 M3x10mm BHCS slightly loose in order to let the upper arms move freely. Overtightening will create bind in the arms.

:: Steering Build - Step 8

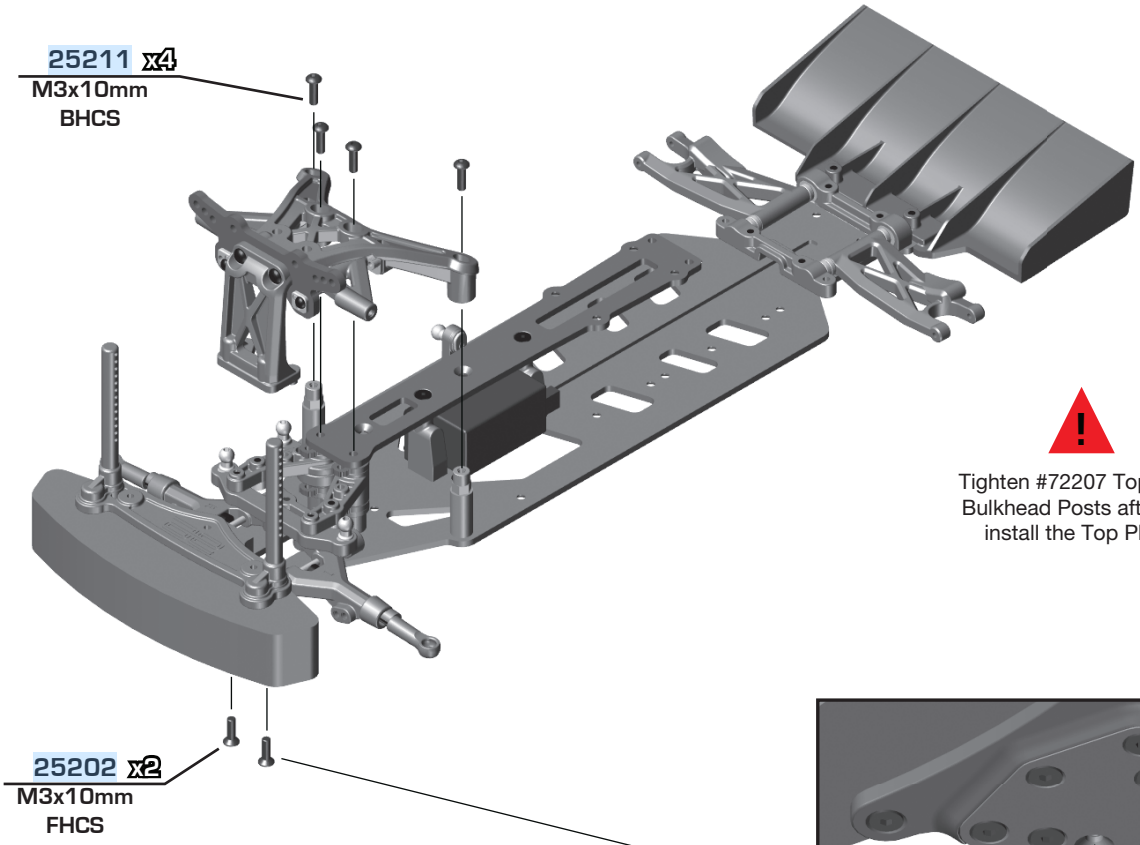

Tighten #72207 Top Plate Bulkhead Posts after you install the Top Plate.

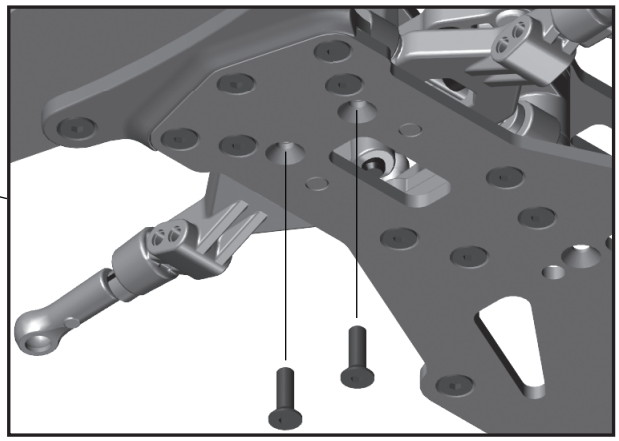

:: Gear Diff Build - Step 1

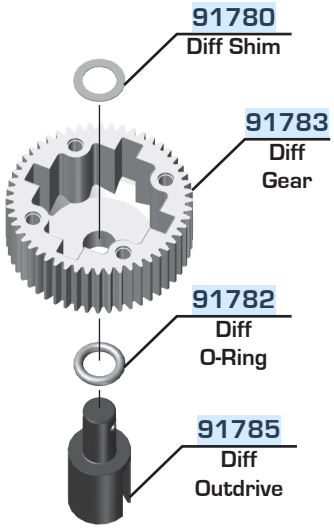

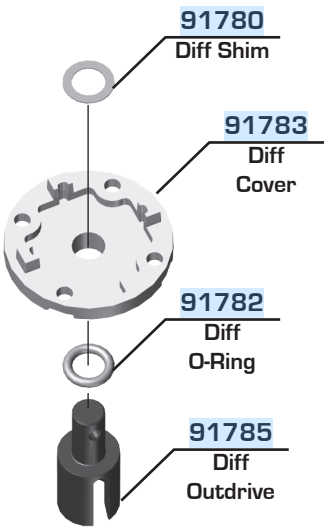

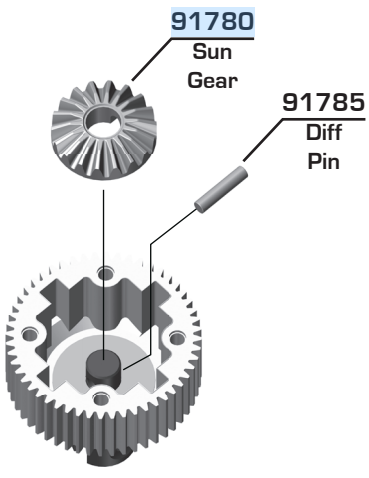

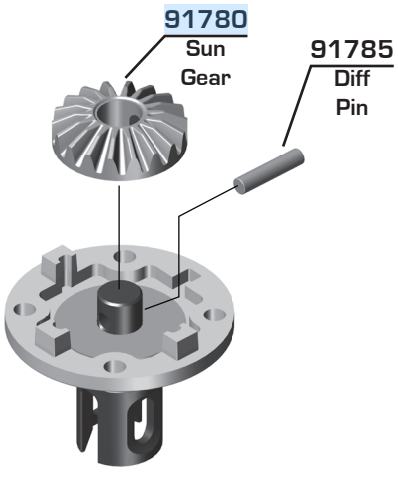

:: Gear Diff Build - Step 2

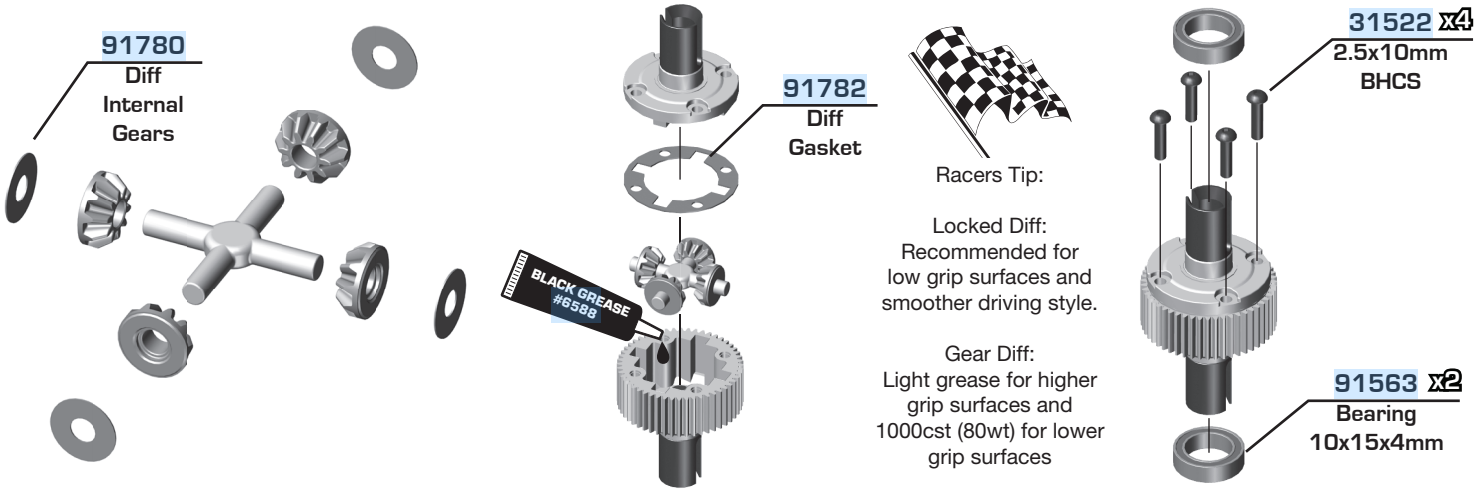

:: Gearbox Build - Step 1

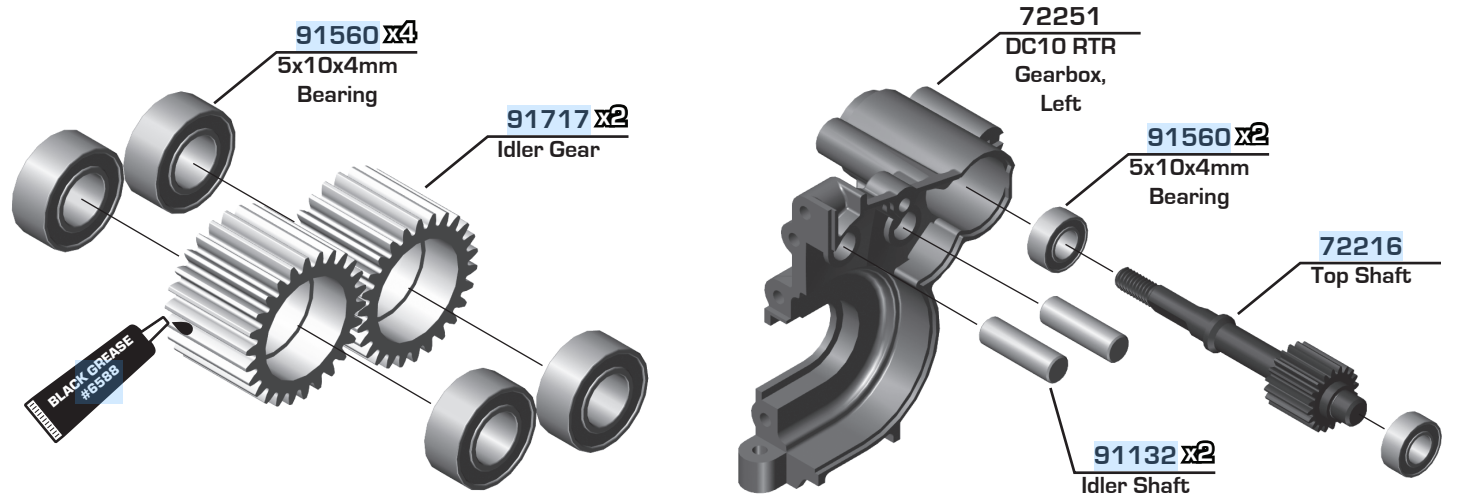

:: Gearbox Build - Step 2

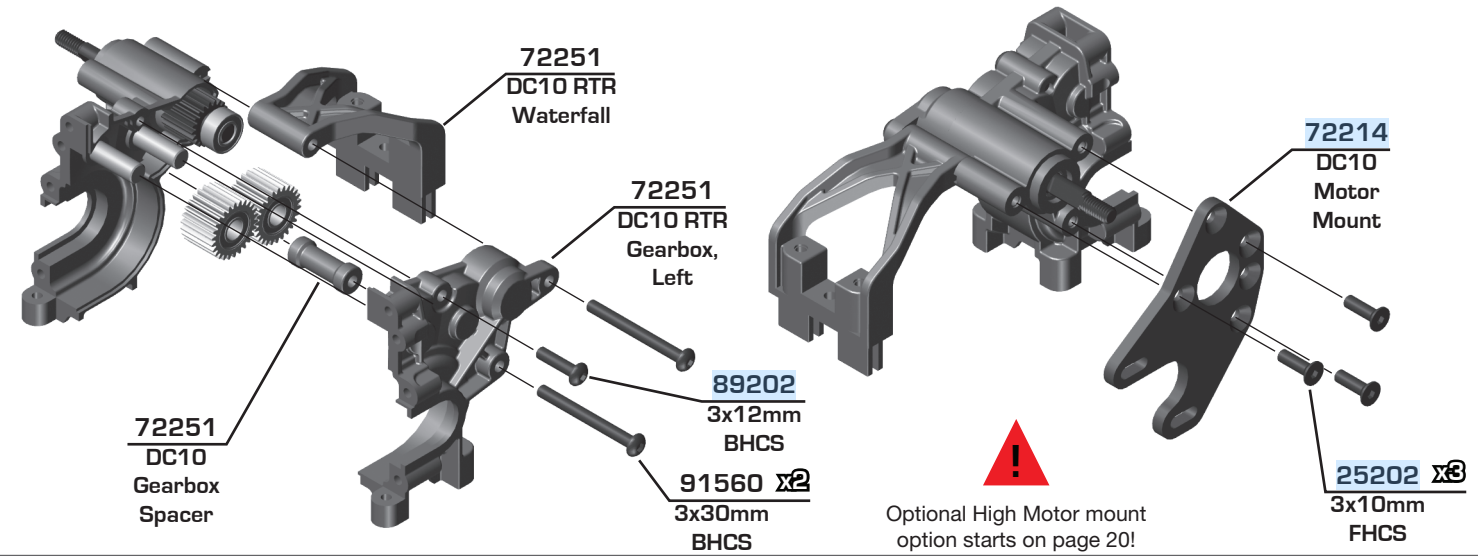

:: Gearbox Build - Step 3

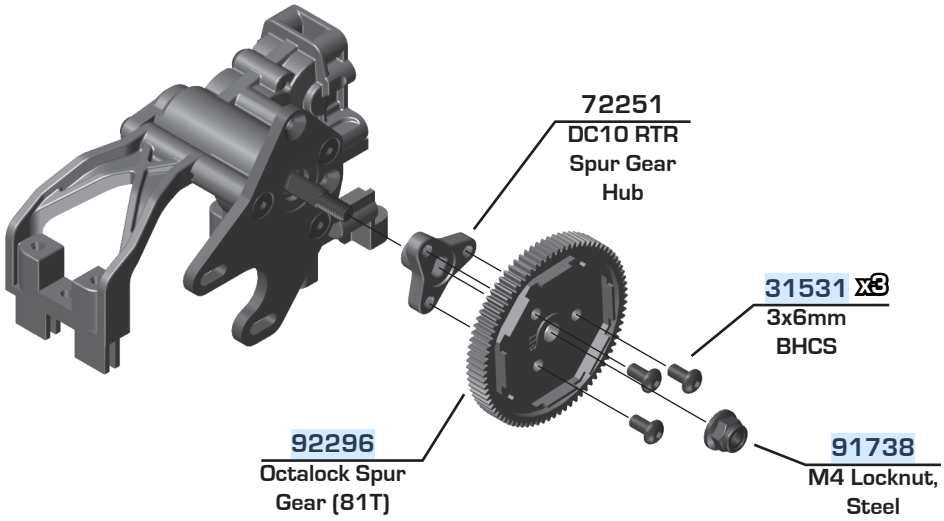

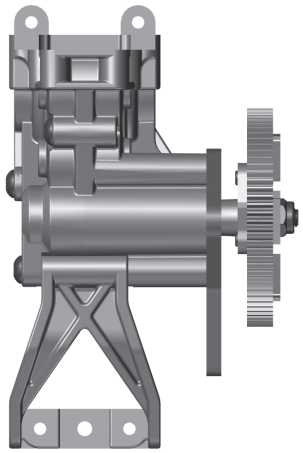

:: Gearbox Build - Step 4

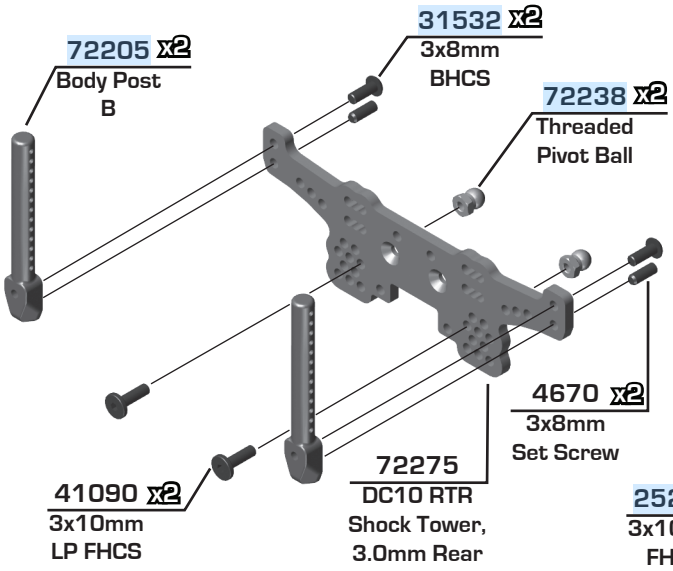

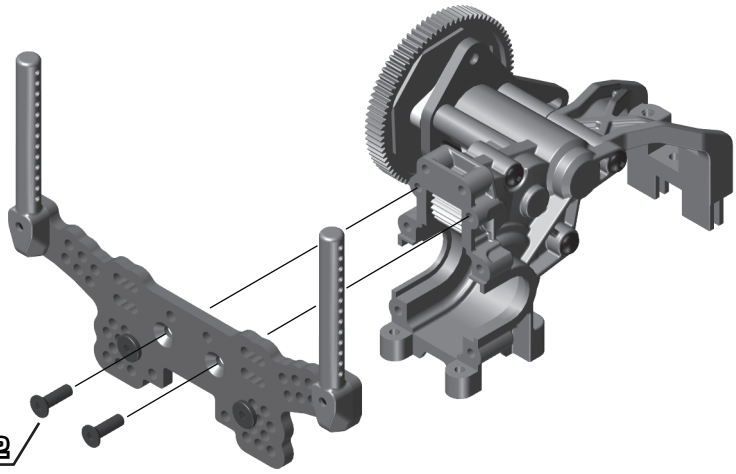

:: Gearbox Build - Step 5

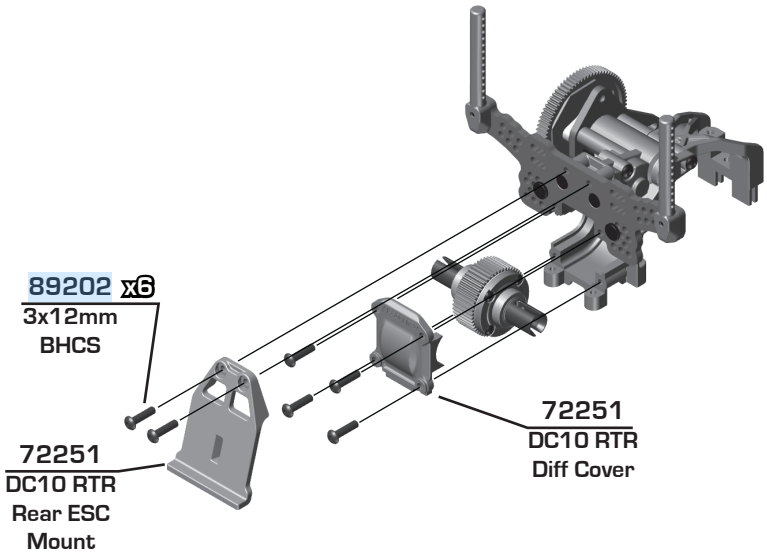

:: Battery Tray - Step 1

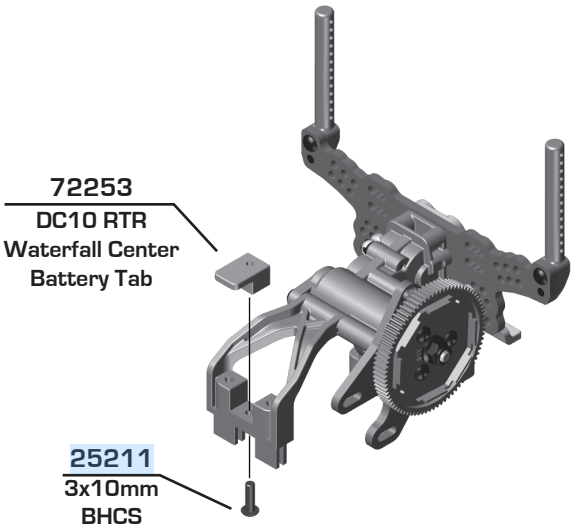

:: Battery Tray - Step 2

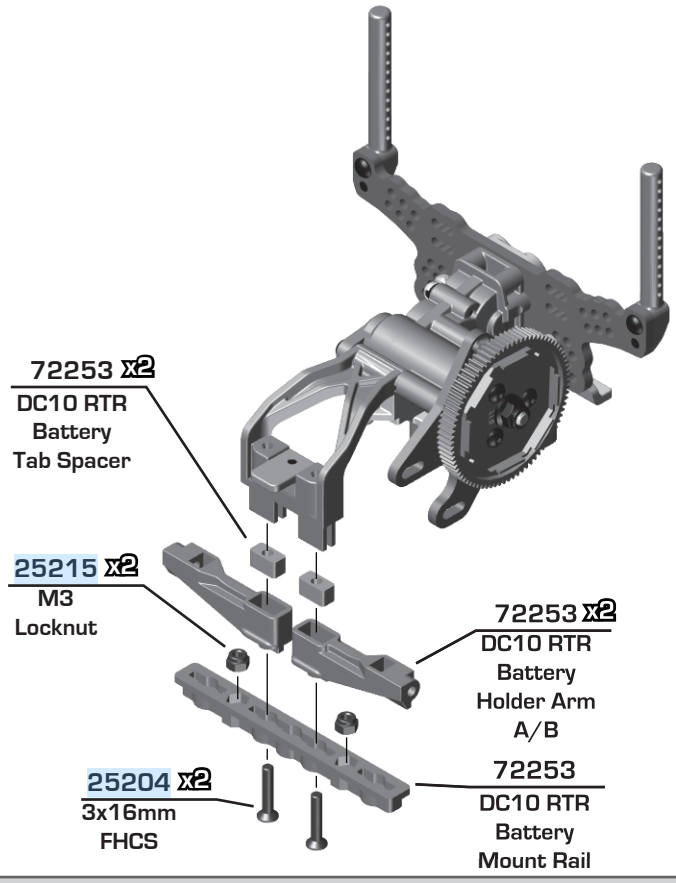

Note the battery holder arm positions when installing!

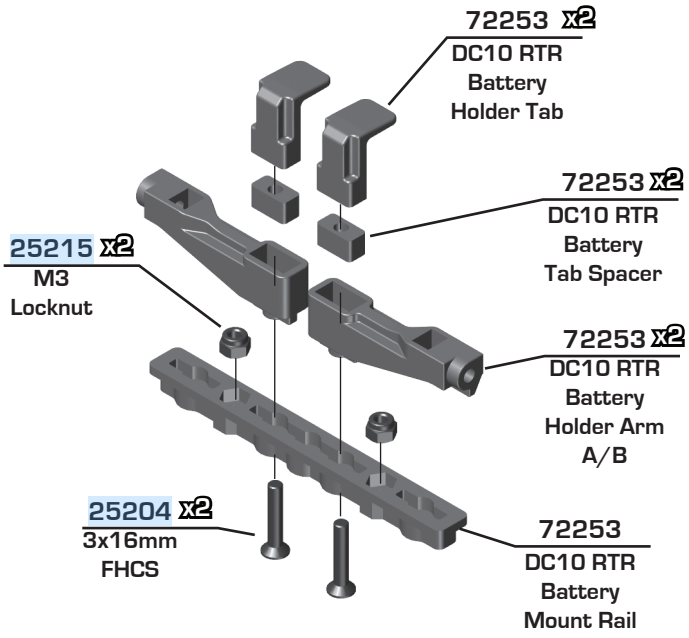

:: Battery Tray - Step 3

Note the battery holder arm positions when installing!

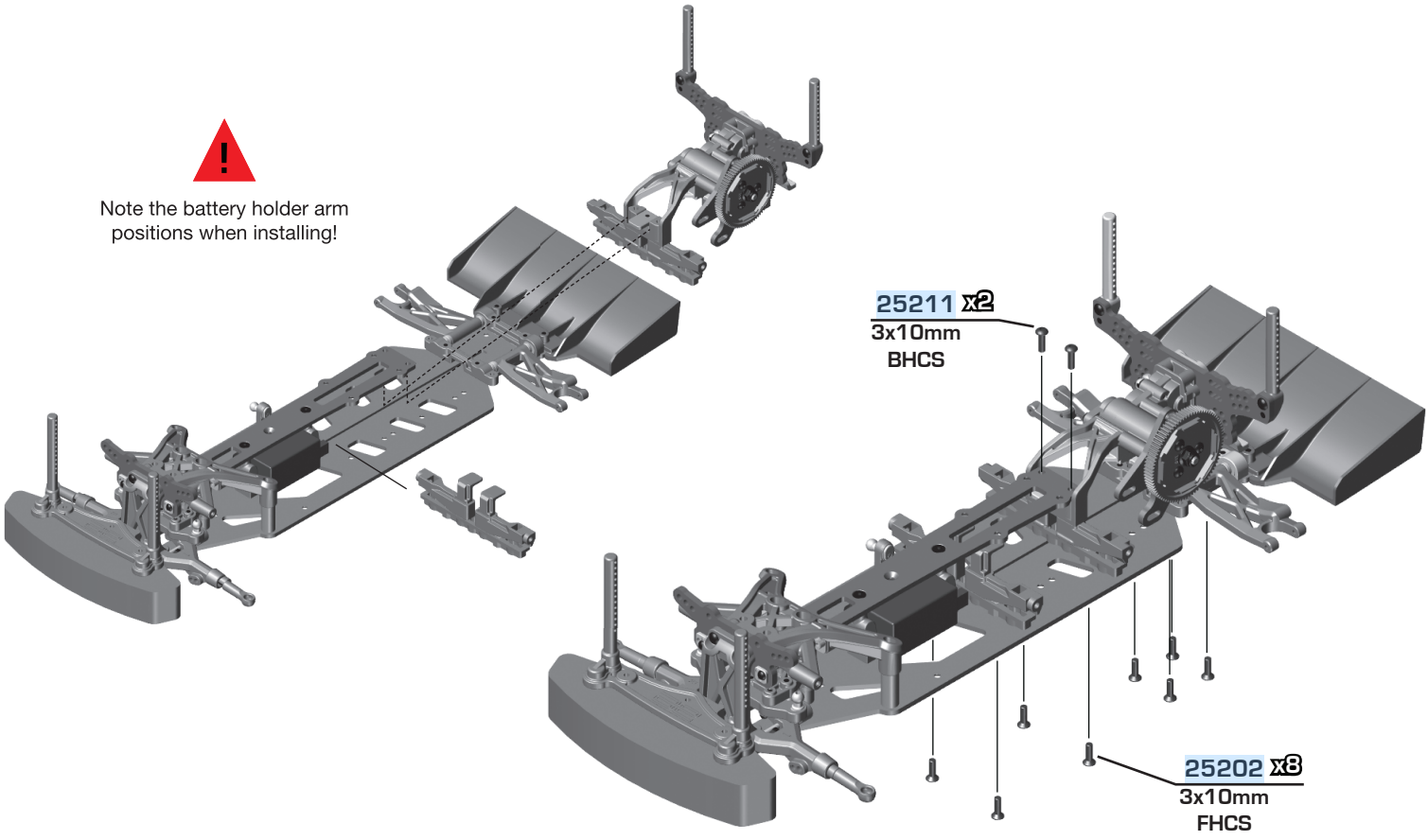

:: Battery Tray - Step 4

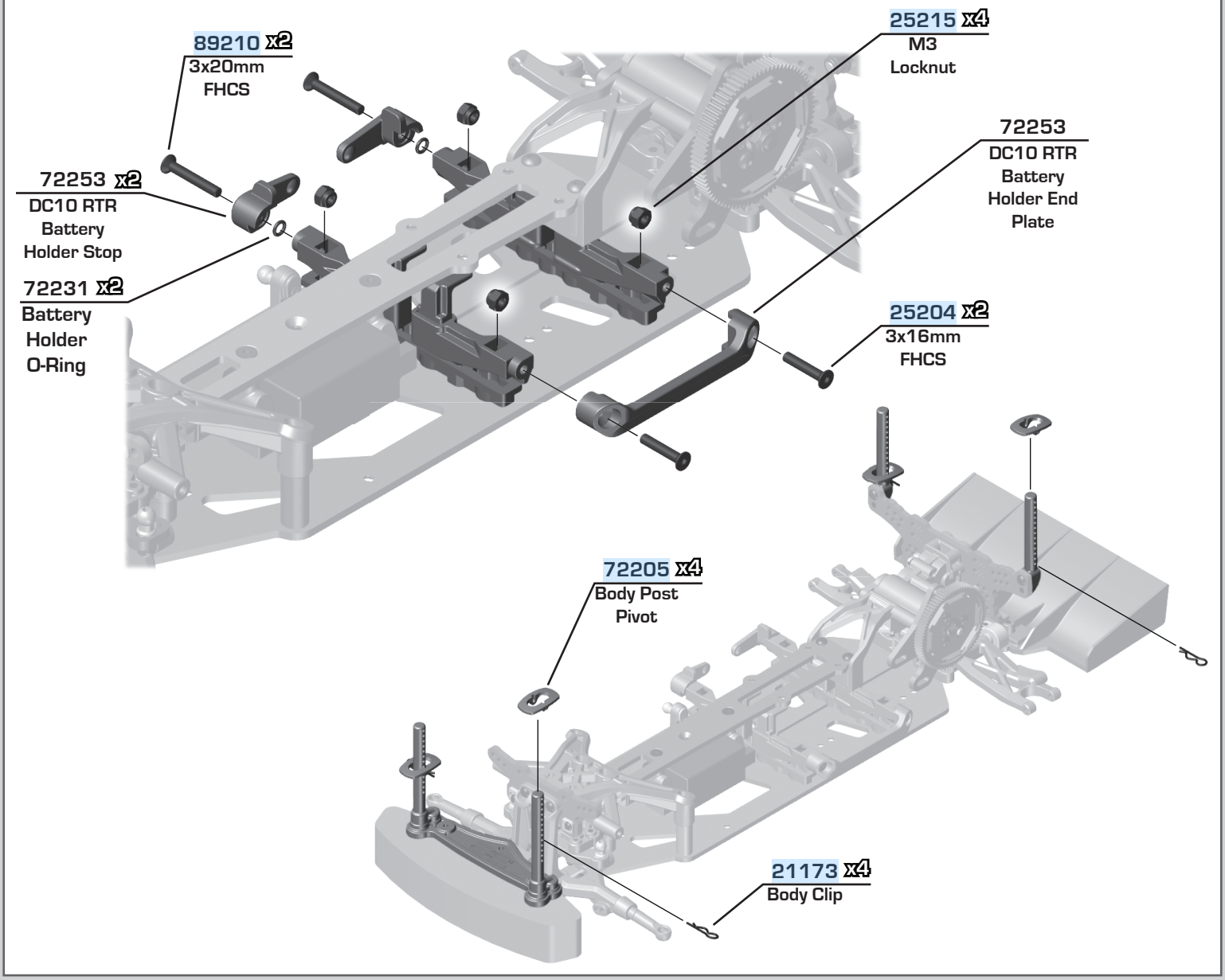

:: Front and Rear Hubs - Step 1

Note: KPI "King Pin Inclination" is used in harmony with Caster, Camber, Down travel and toe angle.

Introducing KPI produces a lifting effect which helps to self align the vehicle under torque / steering. KPI helps contribute to scrub radius and can provide stability in lower speed turns.The more KPI introduced the larger the effect.

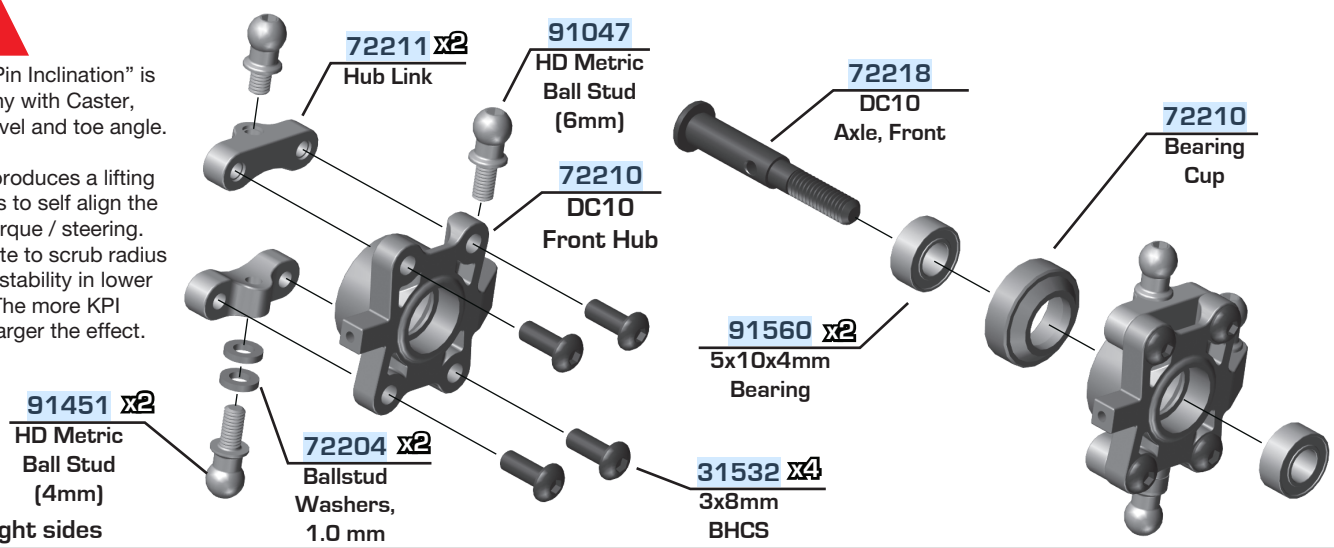

Build left and right sides

:: Front and Rear Hubs - Step 2

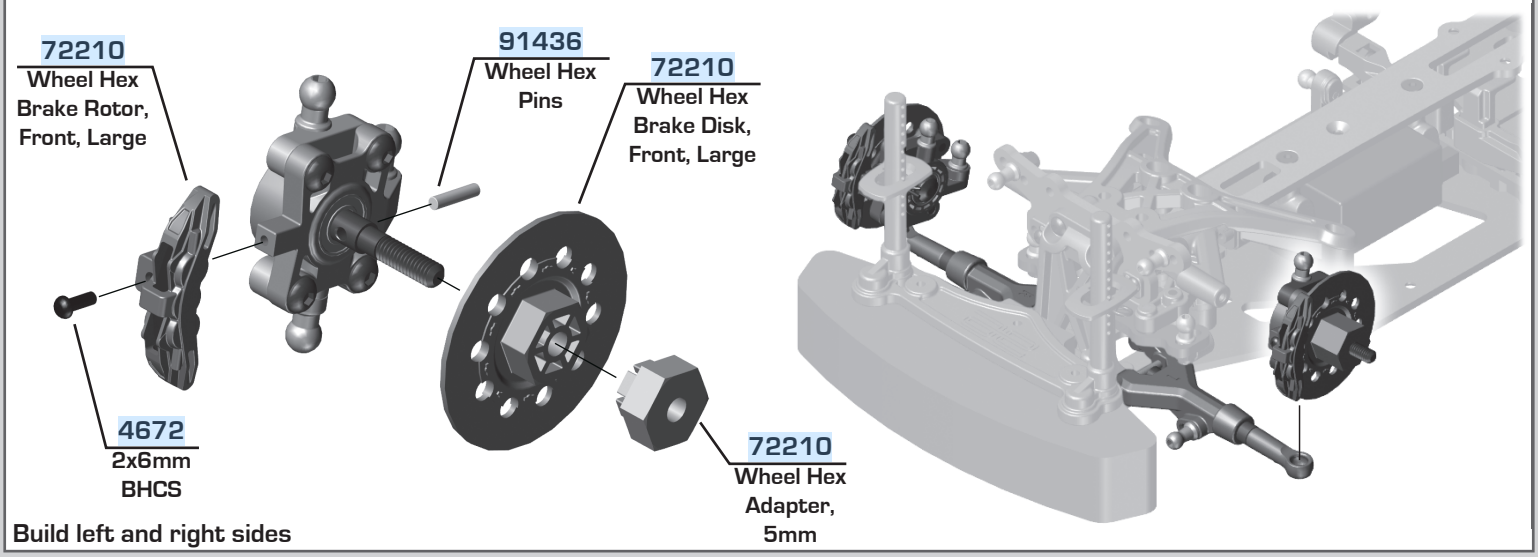

Build left and right sides

:: Front and Rear Hubs - Step 3

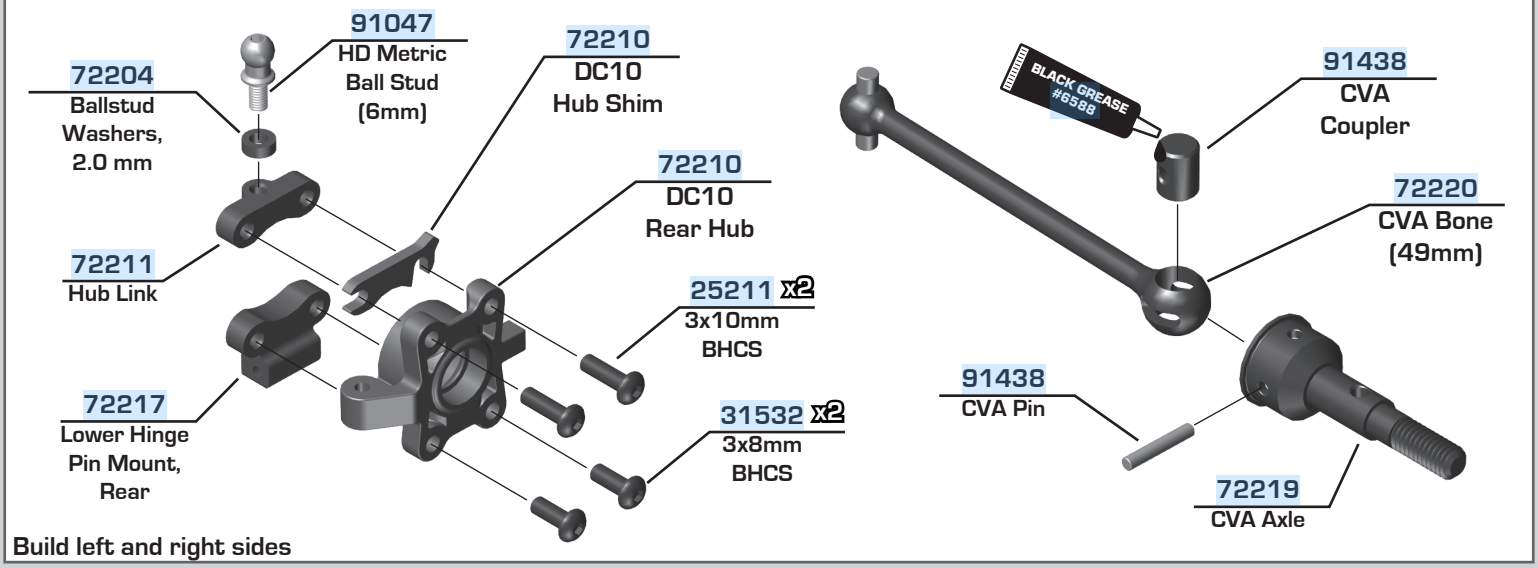

Build left and right sides

:: Front and Rear Hubs - Step 4

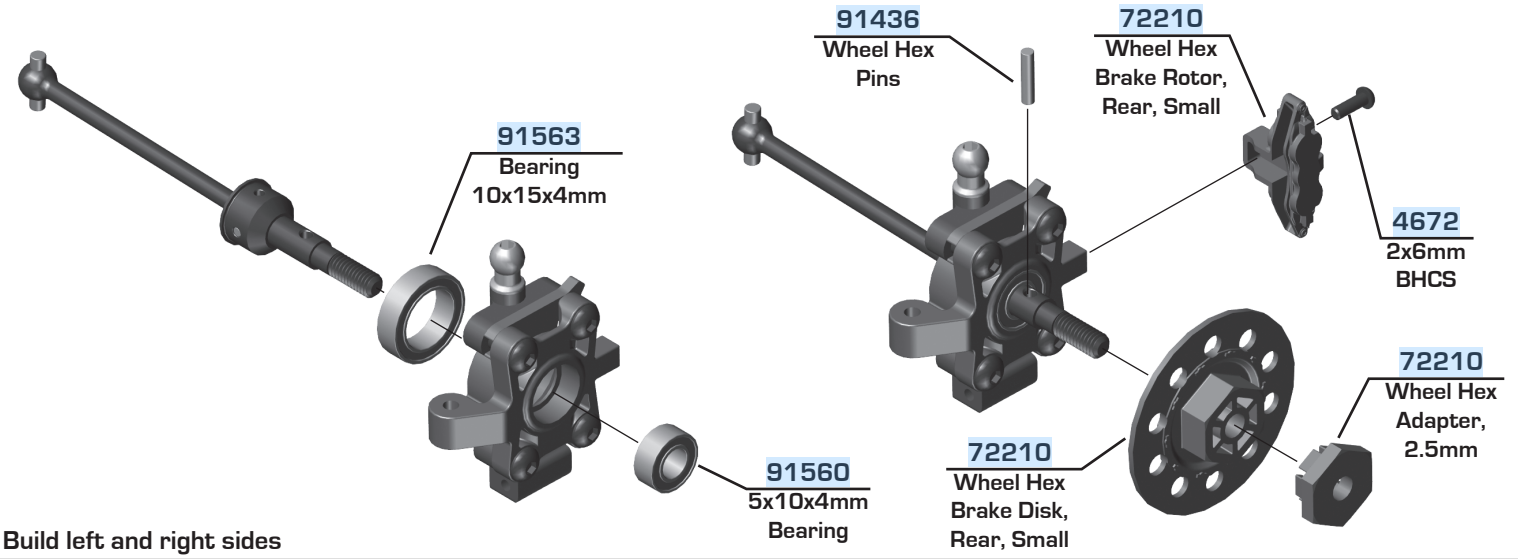

Build left and right sides

:: Front and Rear Hubs - Step 5

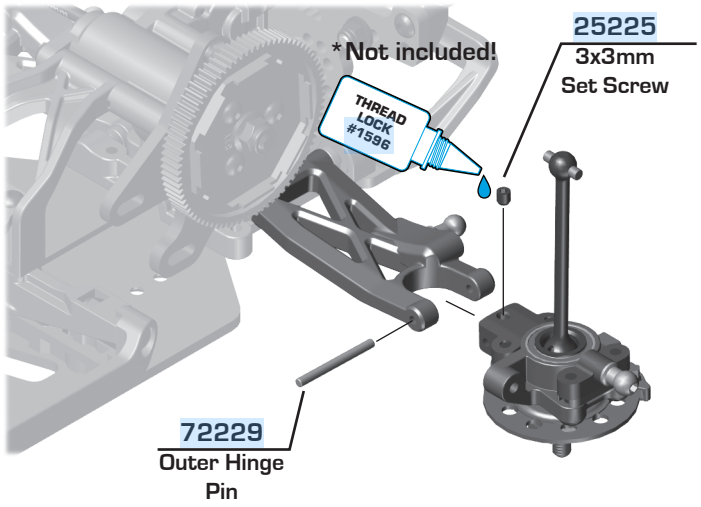

Rotate the rear hub and insert the CVA Bone into the Gear Diff Outdrive.

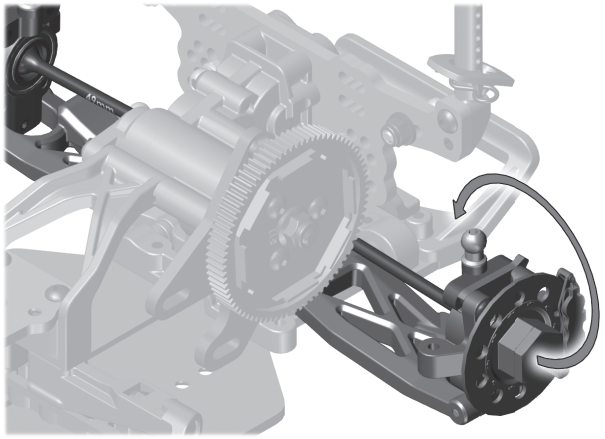

Build left and right sides

:: Turnbuckles Build - Step 1

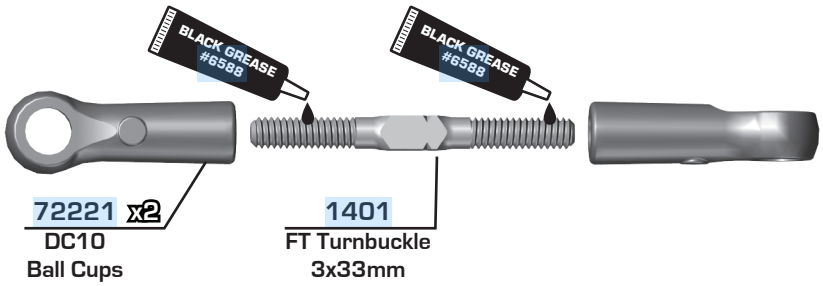

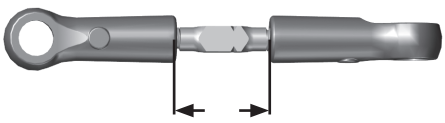

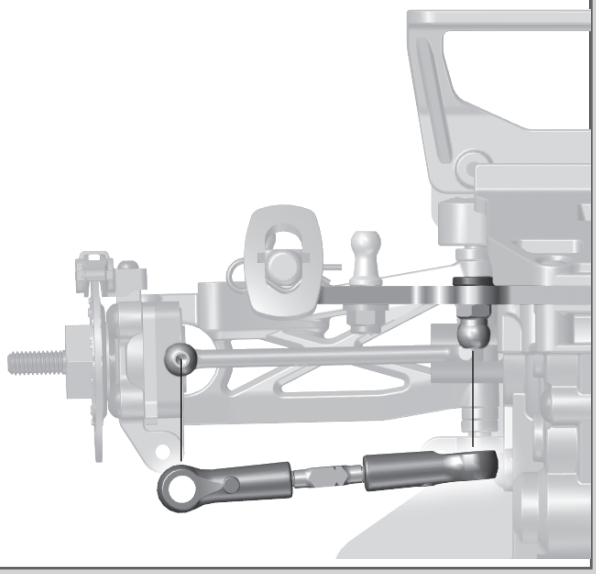

Build left and right sides

:: Turnbuckles Build - Step 2

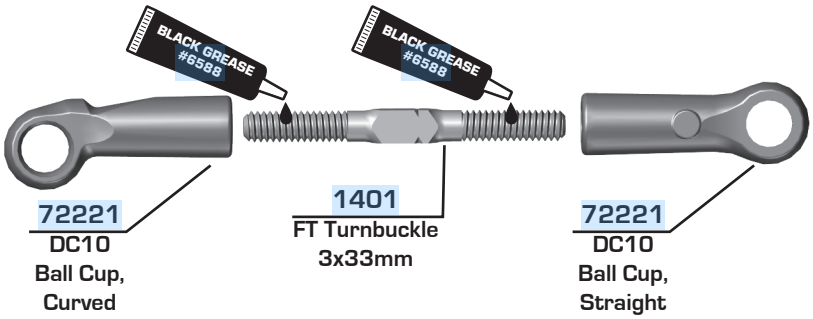

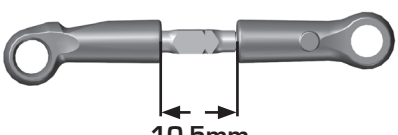

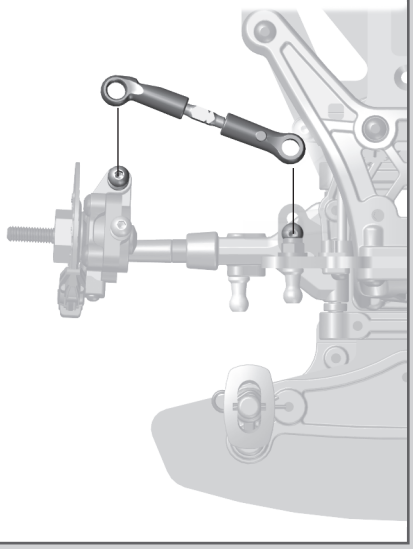

Build left and right sides

:: Turnbuckles Build - Step 3

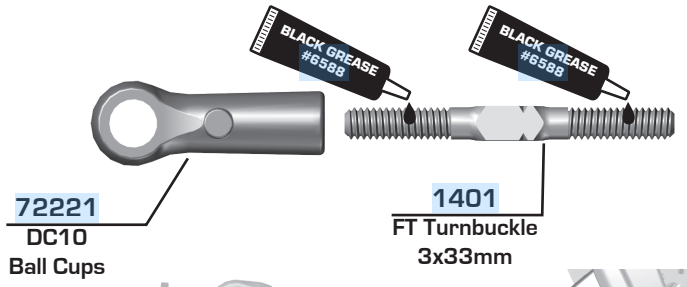

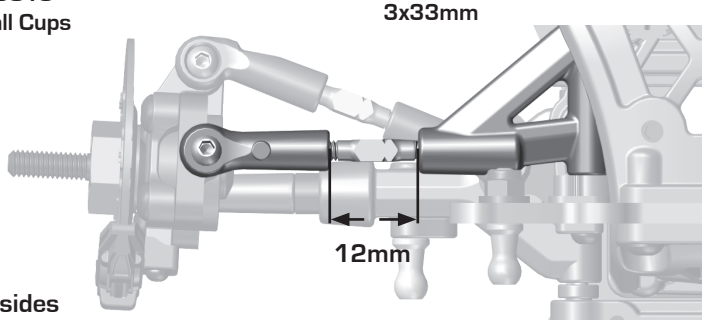

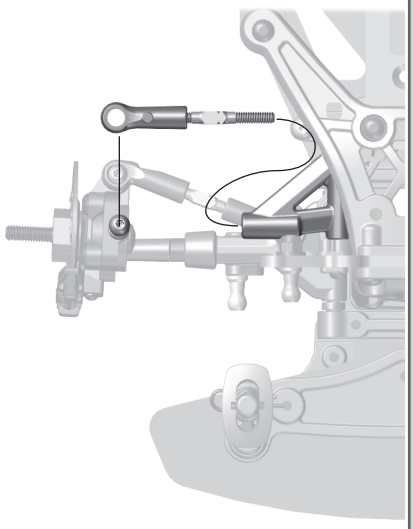

Build left and right sides

:: Turnbuckles Build - Step 4

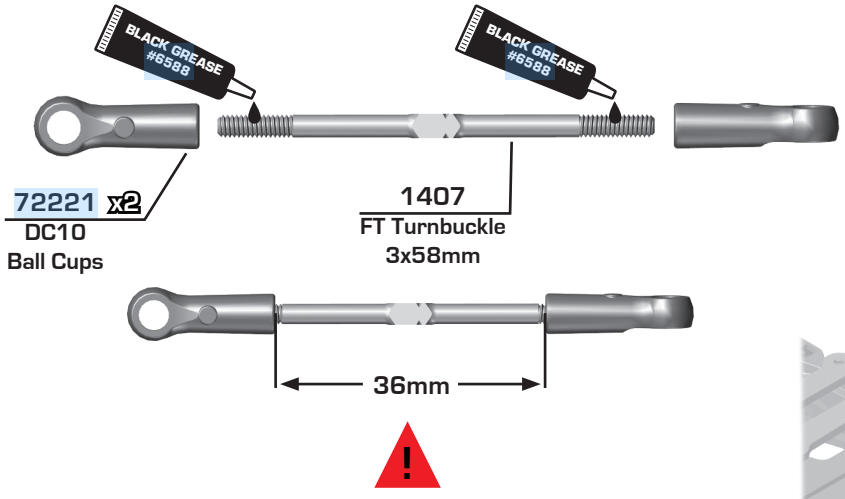

*18mm if servo is flipped

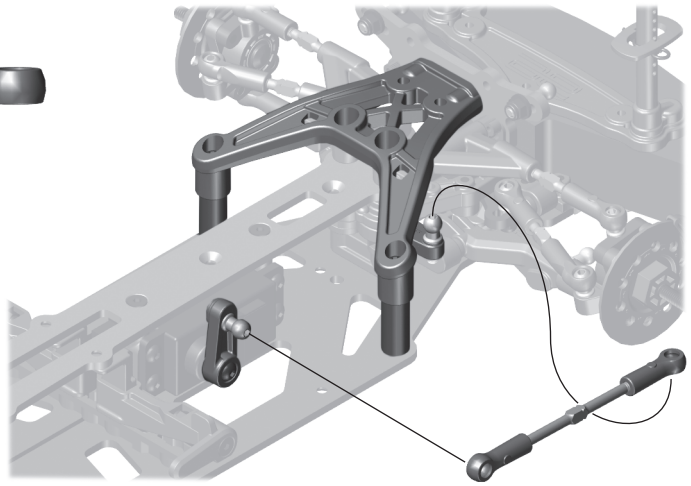

Build left and right sides

:: Shocks Build - Step 1

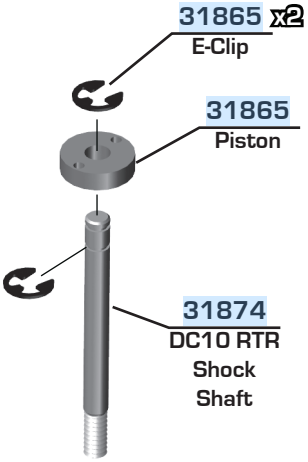



Racers Tip:

Coating the O-rings with green slime (#1105) helps seal & reduce O-ring swell! Green slime not included in kit!

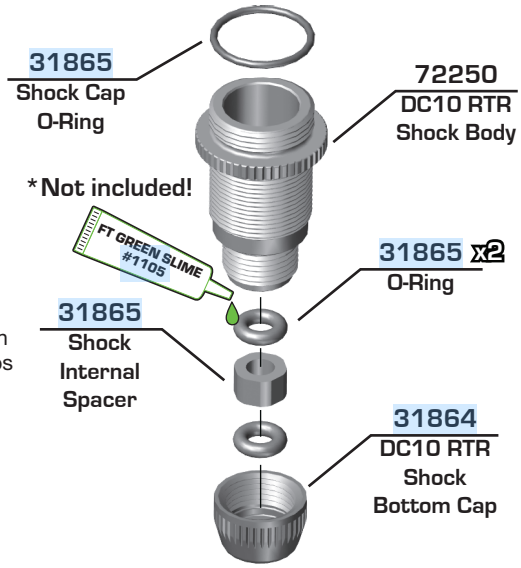

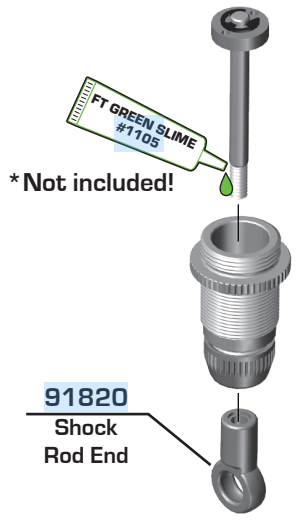

Build x4

:: Shocks Build - Step 2

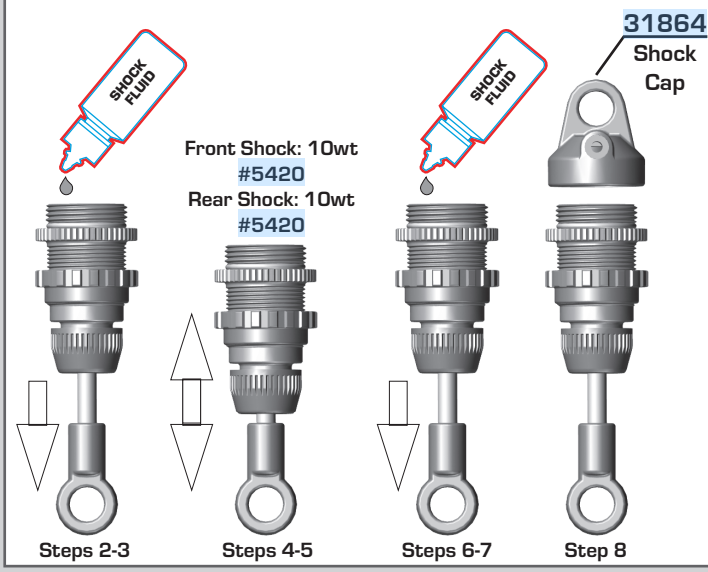

Shock Bleeding Steps:

1. Before assembly, get each bleed screw and thread it 1-2 turns into the shock cap, then remove the screw. This will make it easier when you are bleeding your shocks.
2. Pull shock shaft down.
3. Fill shock body 3/4 full with silicone shock fluid.
4. Slowly move the shock shaft up and down to remove air from under the piston.
5. Wait for bubbles to come to surface.
6. Fill shock body to top with silicone shock fluid.
7. Place a drop of oil in the cap and on cap threads.
8. Install cap (without bleed screw) and tighten completely.
9. Slowly compress shaft all the way to bleed excess silicone shock fluid out the hole in the cap (use rag around shock to catch excess fluid).
10. Install M2x4mm button head screw until snug while shaft is fully compressed.

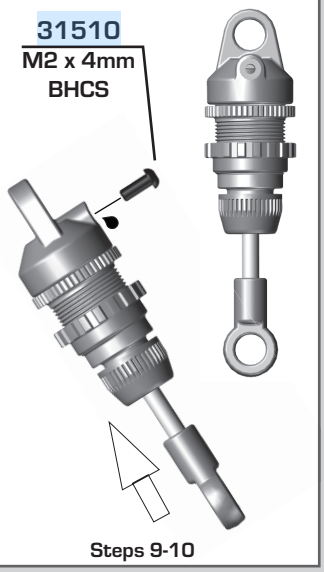

:: Shocks Build - Step 3



Racers Tip:

Surface and Low or High Motor setup will determine what shock springs you should run.

Factory recomended springs for Low Motor setup:
Front: Hard Yellow Spring
Rear: Medium Soft Blue Spring

Factory recomended springs for High Motor setup:
Front: Medium Green Spring
Rear: Medium Soft Blue Spring

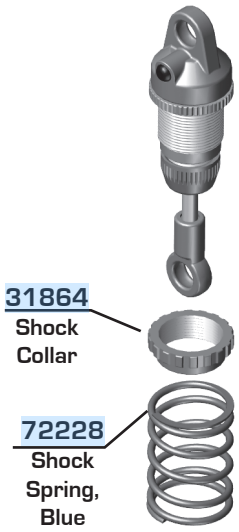

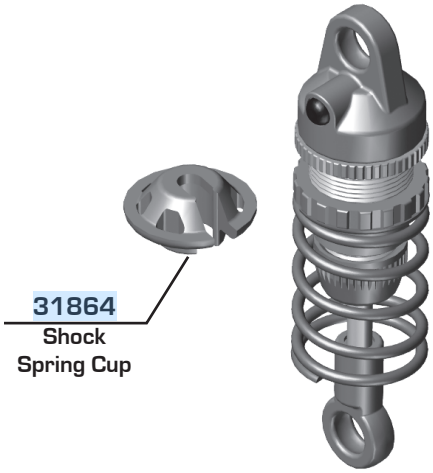

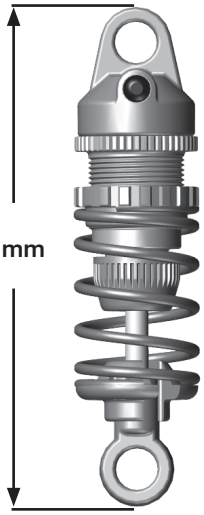

Build x4

:: Shocks Build - Step 4

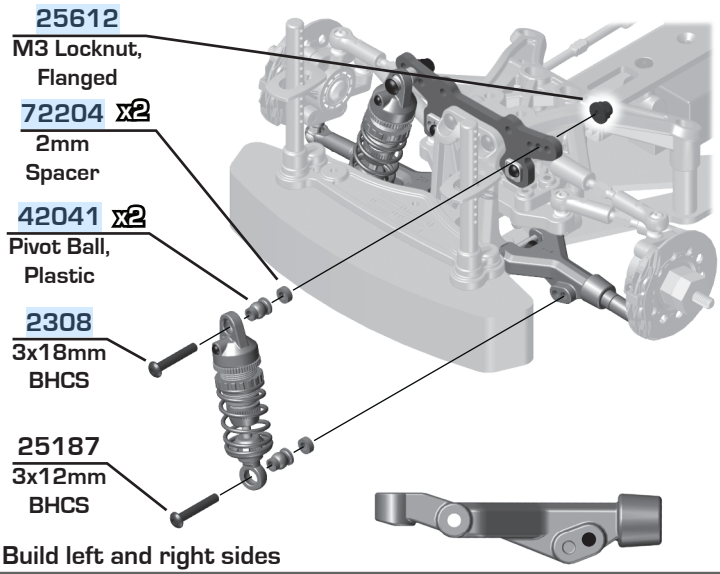

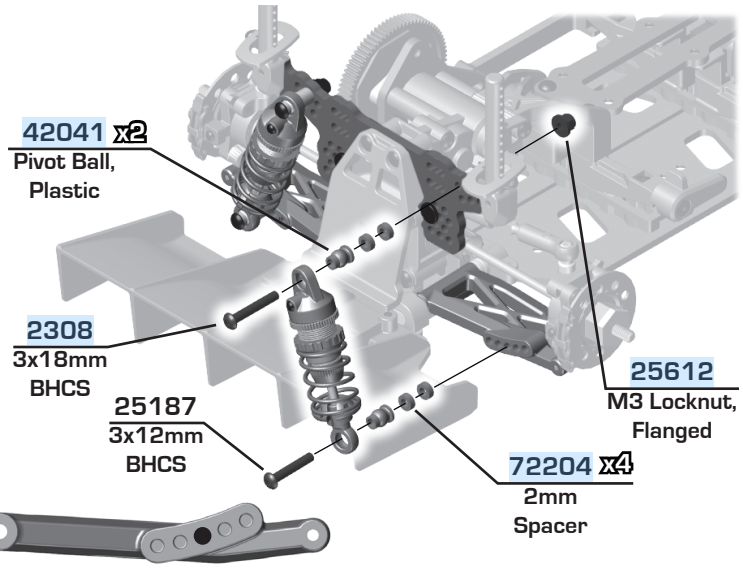

Build left and right sides

:: Electronics Install - Step 1

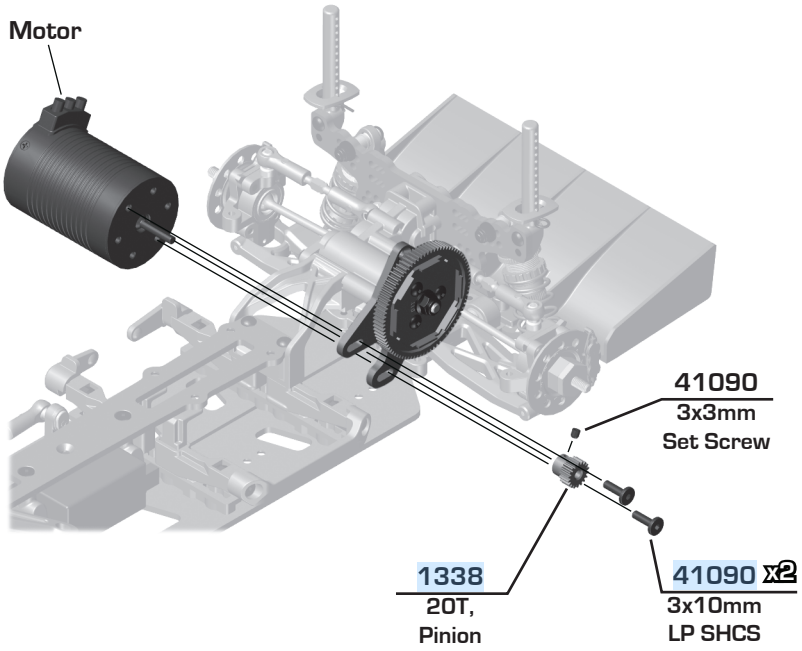

Set The Gear Mesh:

You should be able to rock the spur gear back and forth in the teeth of the pinion gear without making the pinion gear move. If the spur gear mesh is tight, then loosen the #41090 screws and move the motor away, then try again. A gear mesh that is too tight or too loose will reduce power and damage the gear teeth.

Motor Gearing:

Gearing is dictated by the track surface, layout, motor wind and driver preference. Drifting leans heavily on the motors RPM to gain control.

Higher bite surfaces require a taller gearing for higher RPMs. (More wheel spin)

Recommended Motors for Drifting:

- 17.5: Starting Gearing: 72 spur x 26 pinion
- 17.5 Motors can be tuned to work well for drifting, however they generally have too much torque creating a digital feel at low speeds.

- 13.5: Starting gearing: 78 spur x 24 pinion
- Low torque, higher rpm 13.5 Motors are popular for drifting. This motor wind provides a controllable rpm range for most surfaces.

- 10.5: Starting gearing: 78 spur x 22 pinion
- High RPM 10.5 turn motors are another popular option for drifting. The higher rpms from a 10.5 give a wider tuning window. Usually larger spur gears are used with lower wind motors.

A taller gearing will provide a larger rpm window, warmer motor temps and shorter run times.
Gearing lower provides a smaller rpm window, cooler motor temps and longer run times.

:: Electronics Install - Step 2

Rotate the battery levers to install the battery. Rotate the levers back down to lock in the battery.

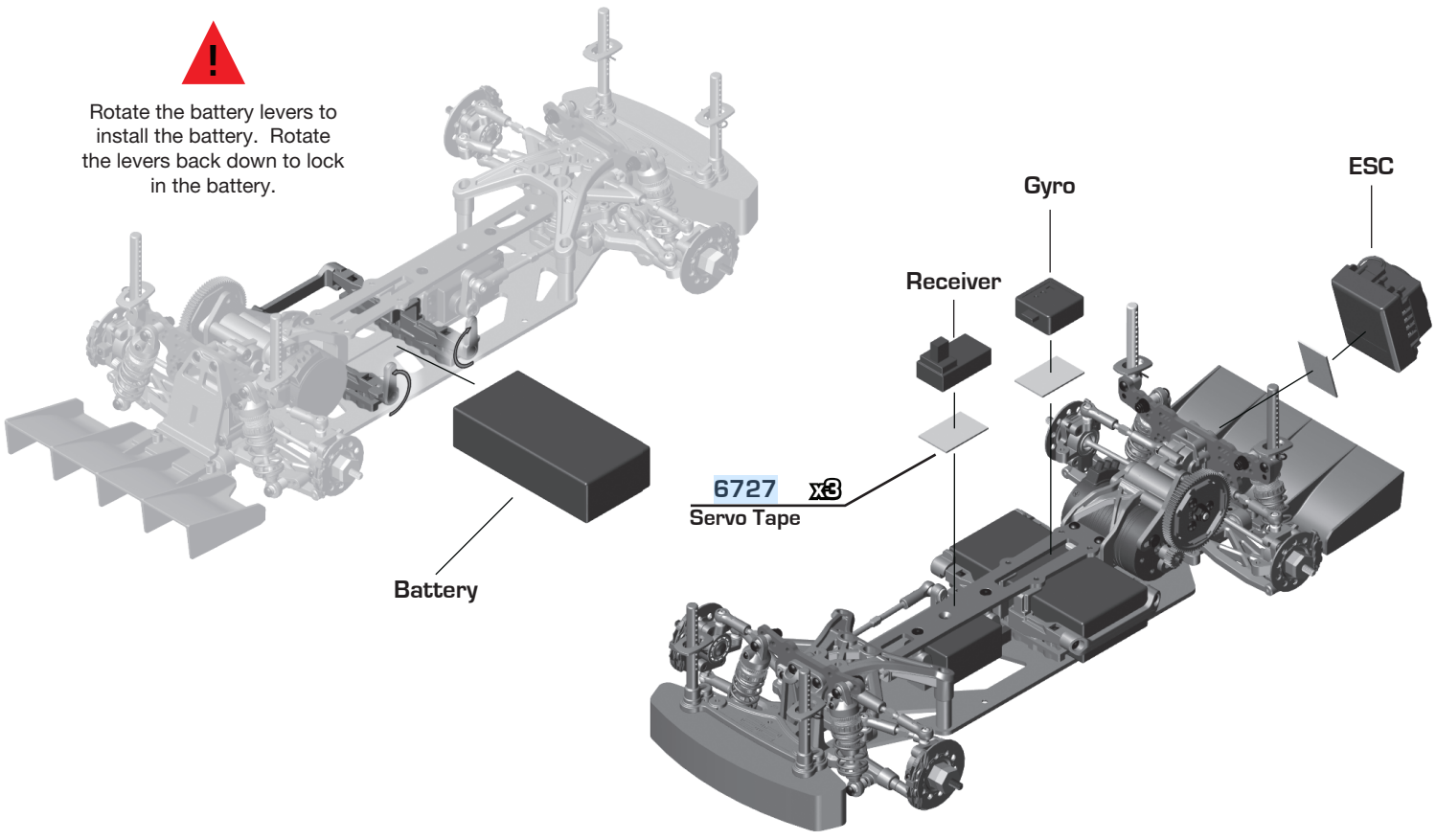

:: Wheels / Tires / Body - Step 1



Use foam tape to secure the tires to the wheels!

DC10 Wheels / Tires	
#72234	RTR Wheels and Tires
#72241	DC10 Drift Tires
#72242	FT Adjustable Wheel Rim, Black
#72243	FT Adjustable Wheel Rim, Silver
#72244	FT Adjustable Wheel Rim, White
#72245	FT Adjustable Wheel Rim, Bronze
#72246	FT Adjustable Wheel Face Plate, Black
#72247	FT Adjustable Wheel Face Plate, Silver
#72248	FT Adjustable Wheel Face Plate, White
#72249	FT Adjustable Wheel Face Plate, Bronze
#72268	DC10 Foam Drift Tire Tape
#72269	FT Adjustable Wheel Rim, Flo Yellow
#72270	FT Adjustable Wheel Face Plate, Flo Yellow

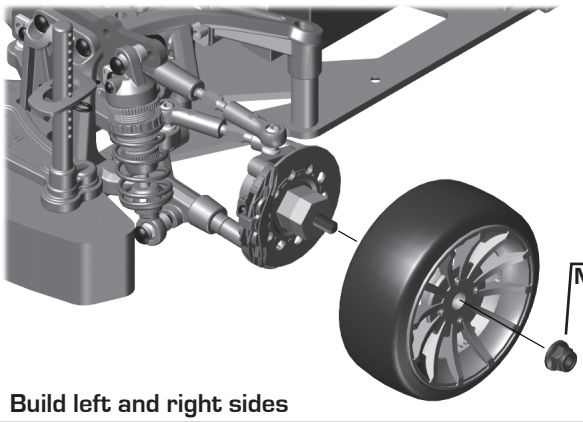

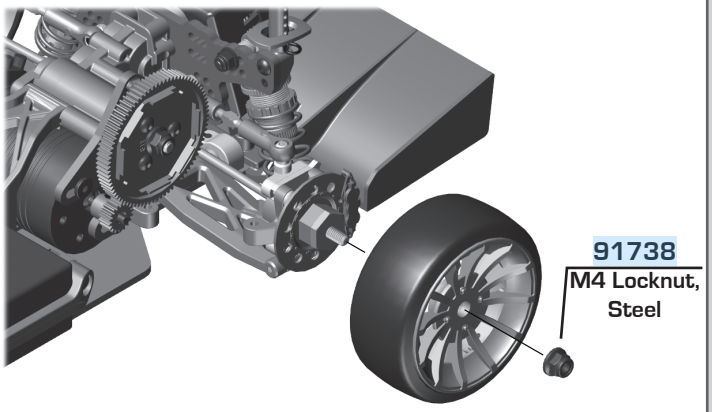

Build left and right sides

:: Wheels / Tires / Body- Step 2

DC10 Bodies	
#31891	Hoonitruck Body, Clear
#31906	Datsun 240z Body, Clear
#31911	A550 Body, Clear
#31916	ST550 Body, Clear
#31922	Nissan Z Body, Clear
#31930	Datsun 620 Body, Clear
#72276	DC10 RTR Body, Blue

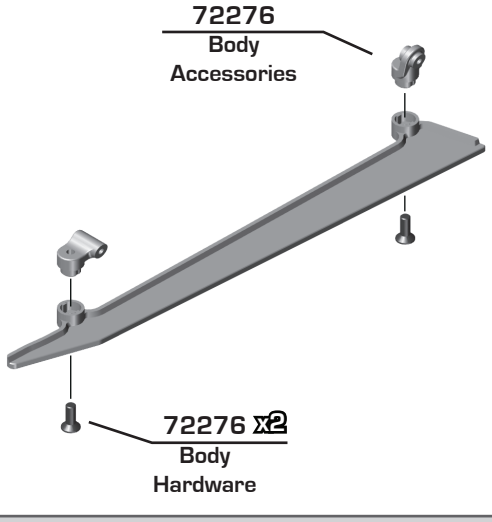

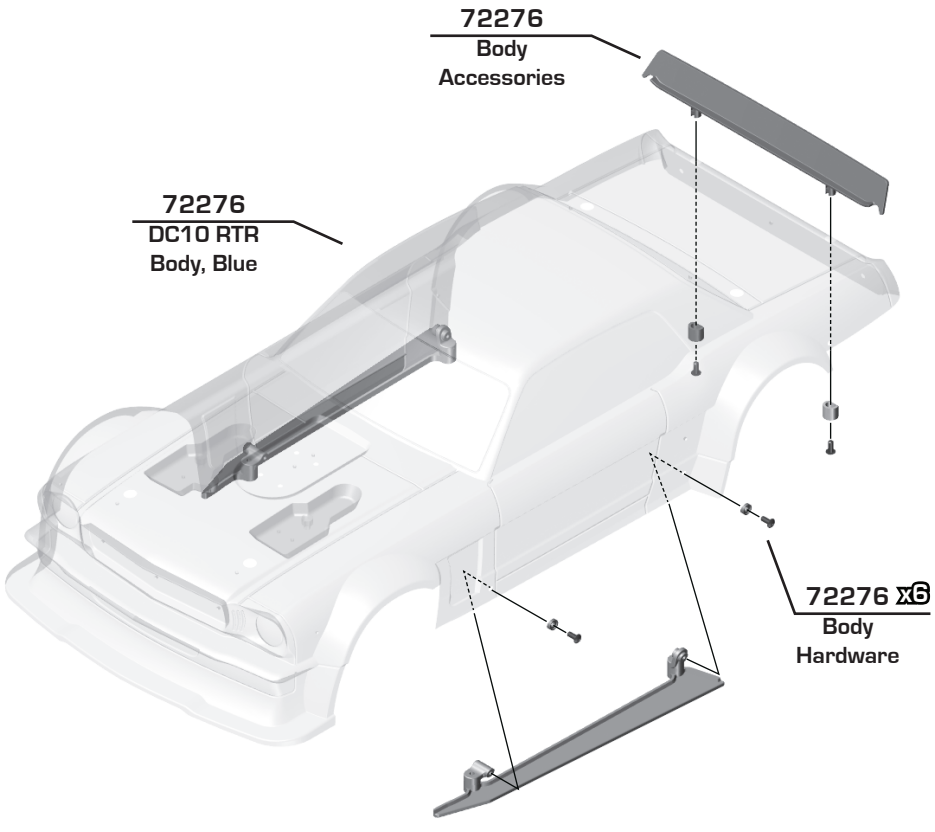

:: Wheels / Tires / Body - Step 3

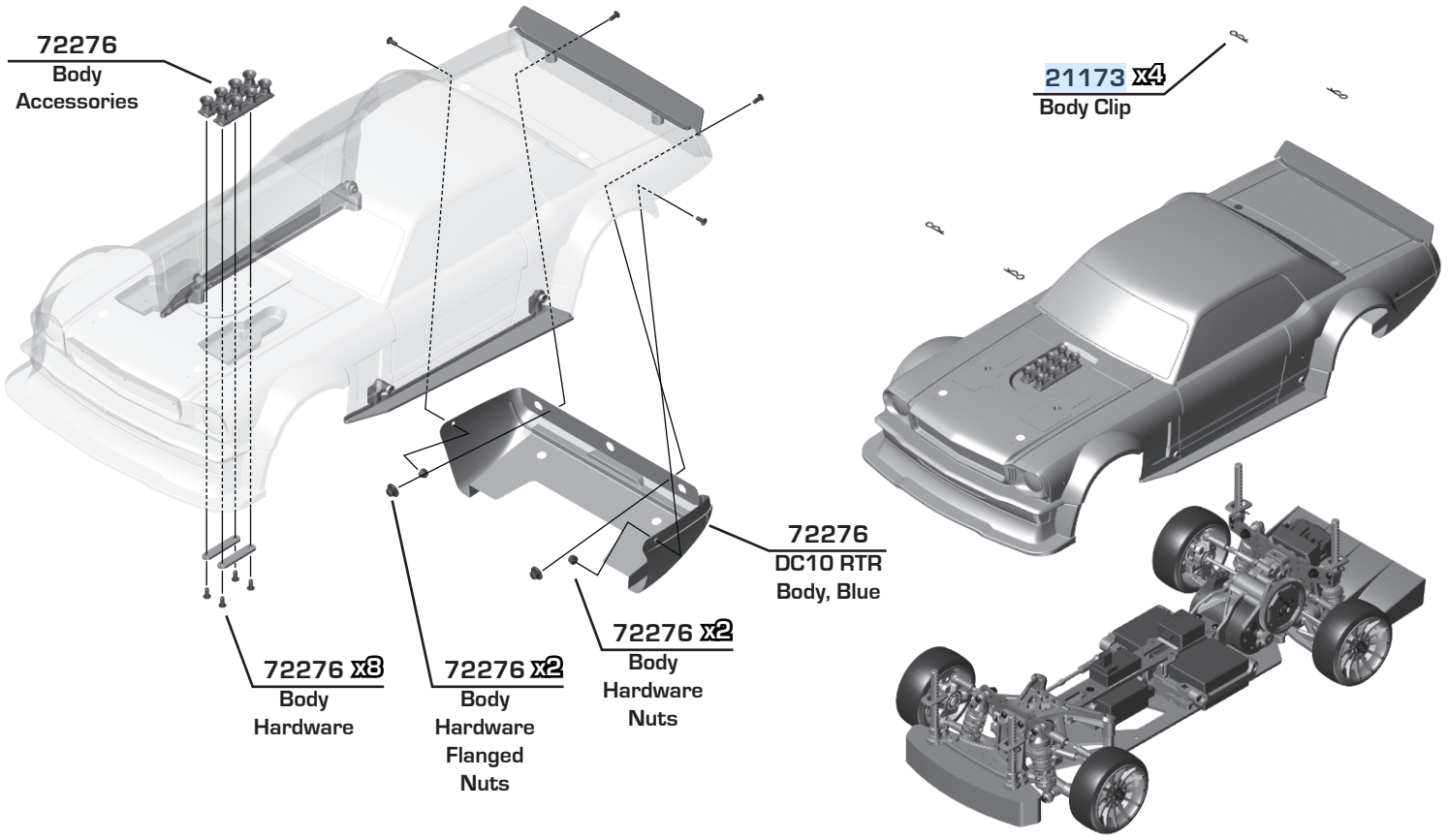

:: Optional High Motor Mount - Step 1

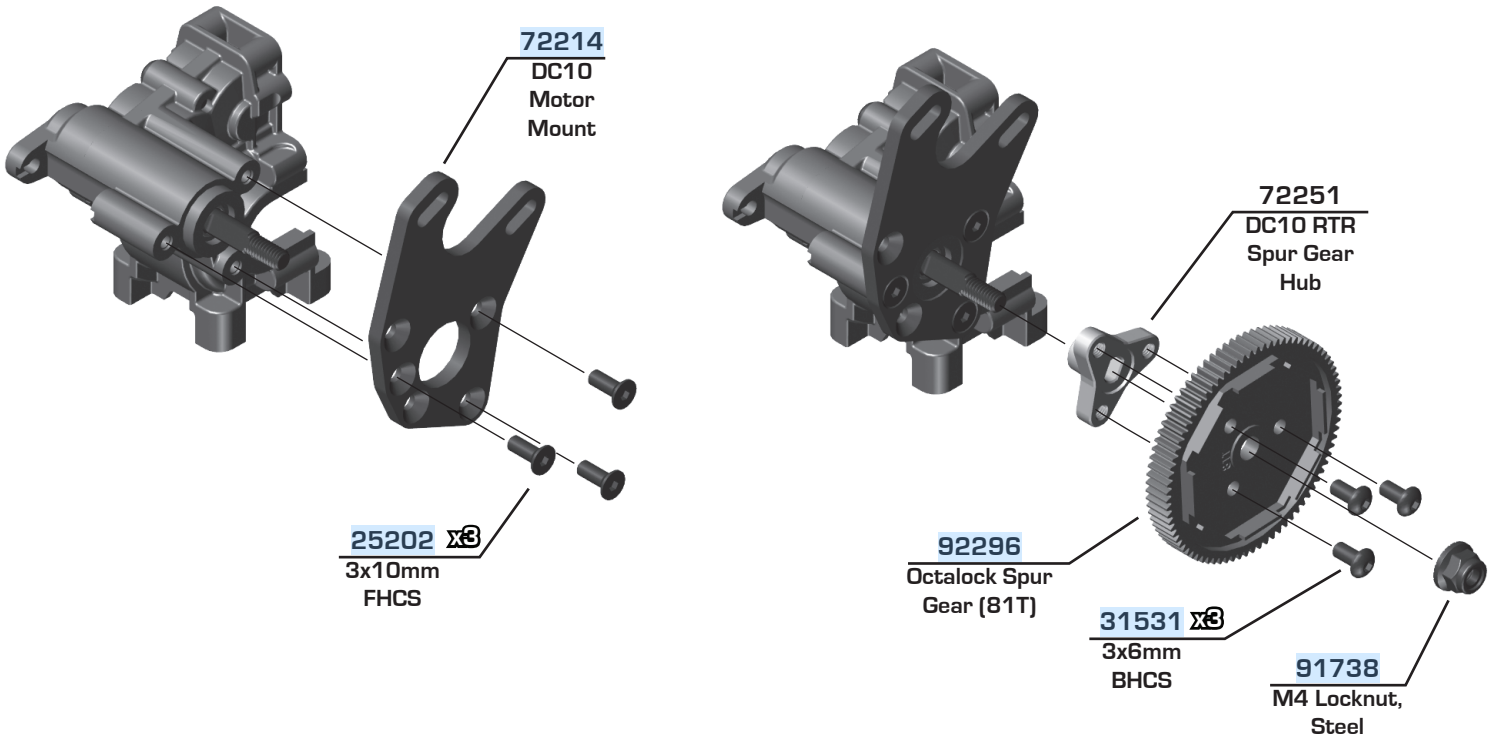

:: Optional High Motor Mount - Step 2

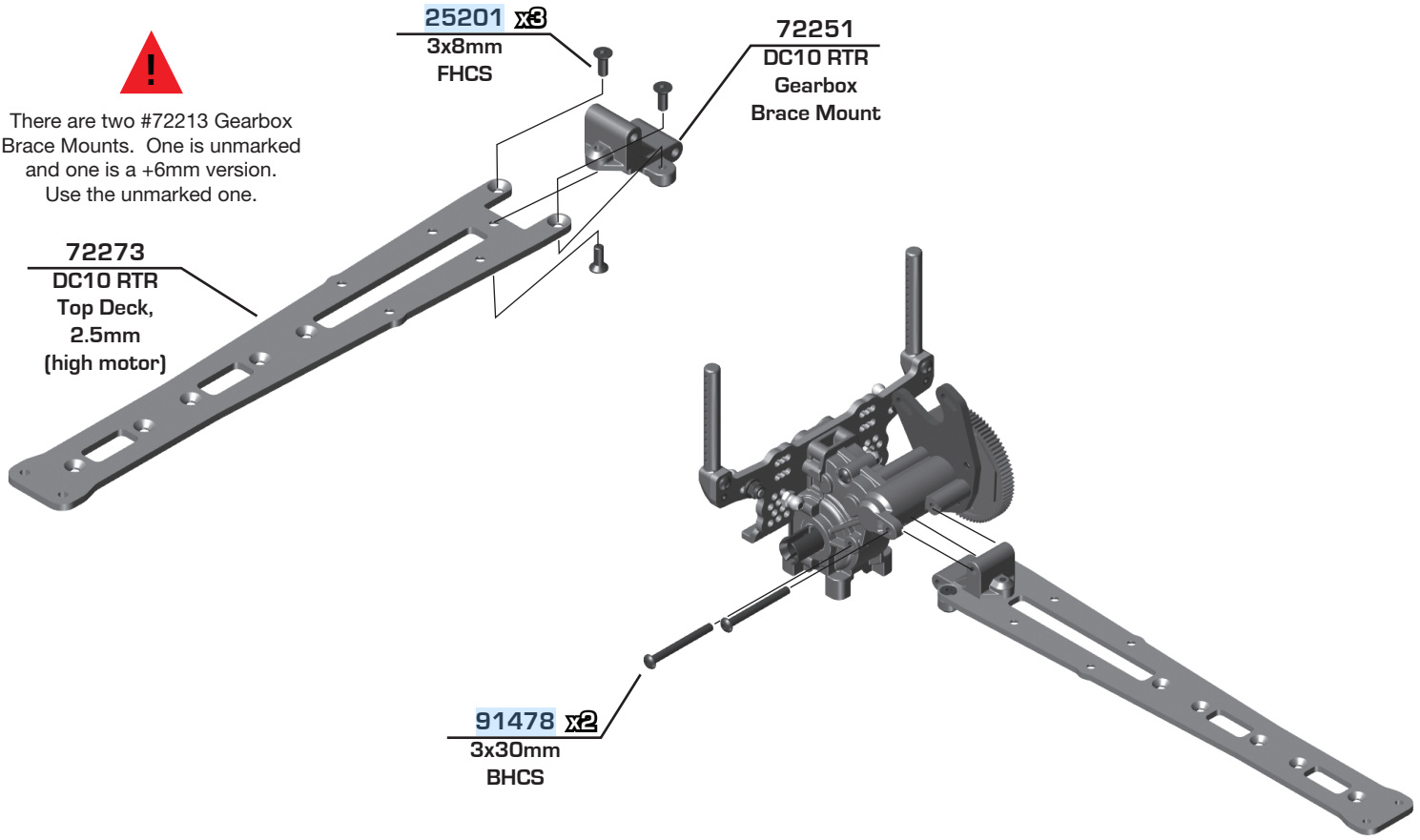

:: Optional High Motor Mount - Step 3

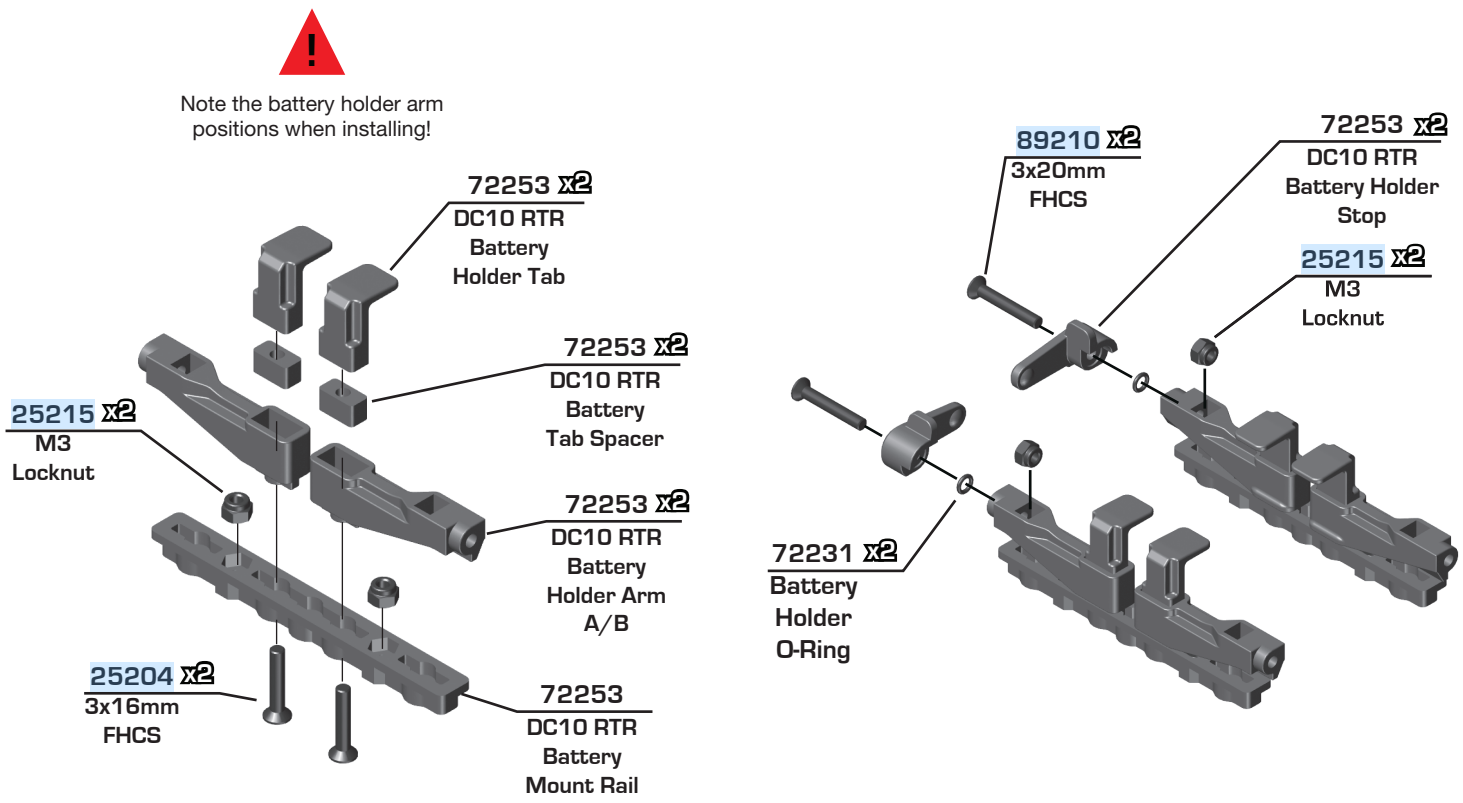

Build x2

:: Optional High Motor Mount - Step 4

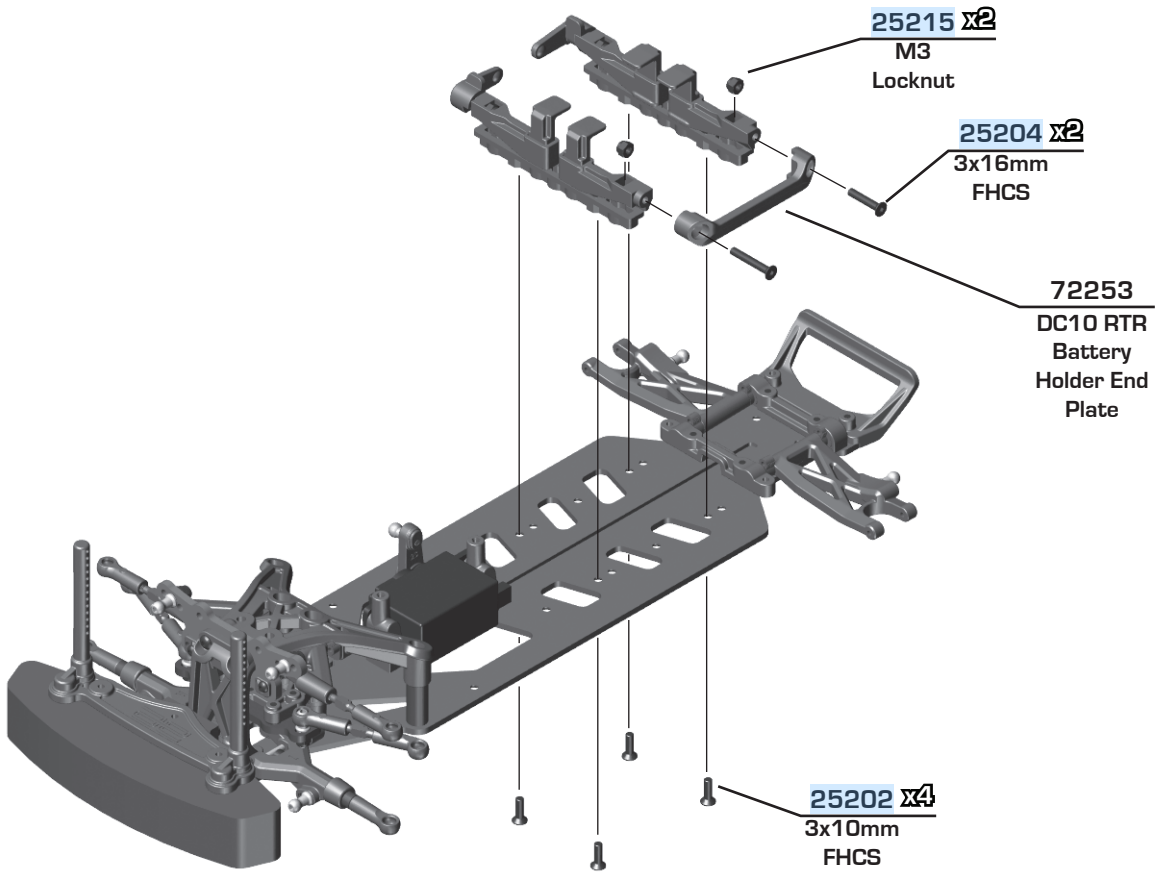

:: Optional High Motor Mount - Step 5

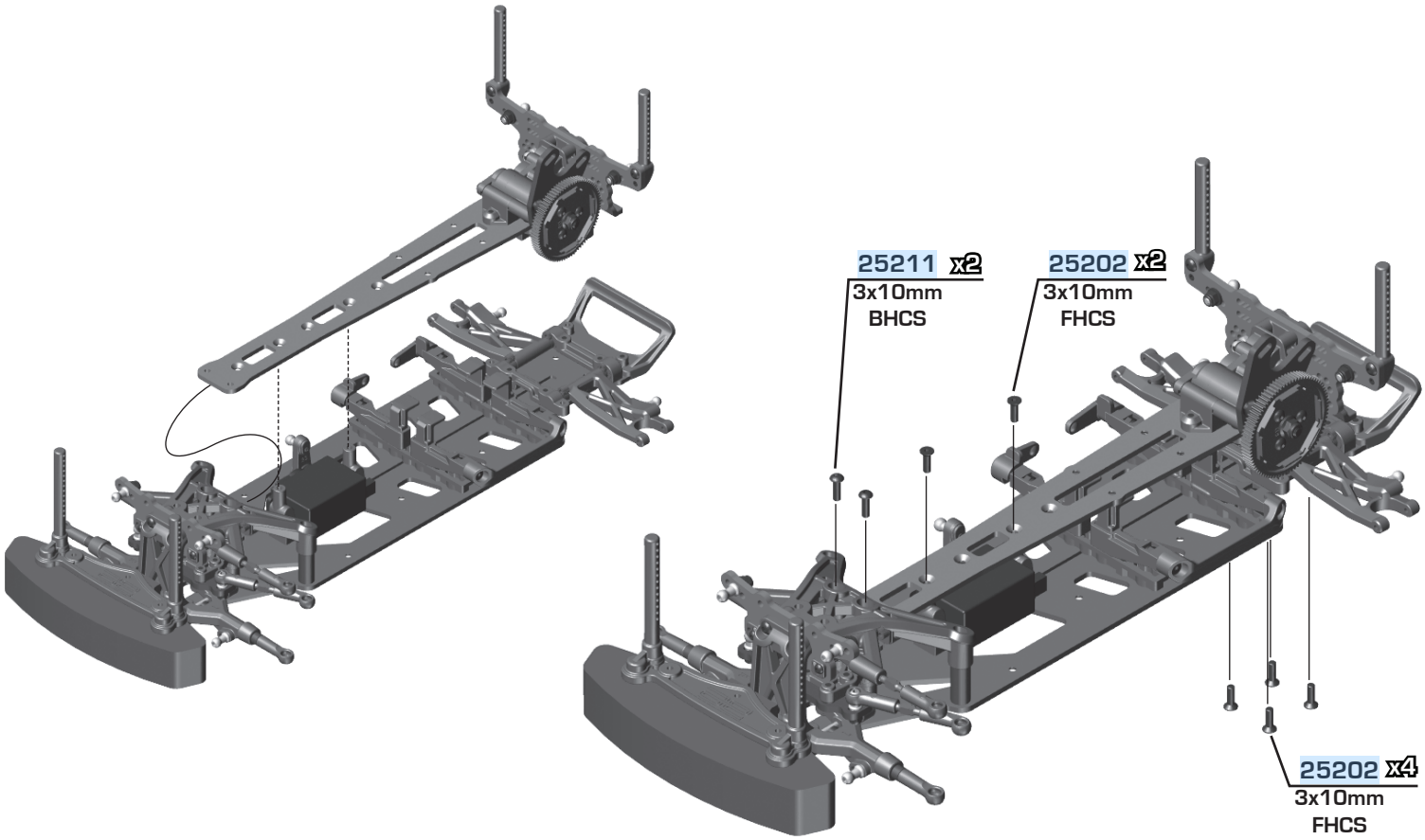

:: Optional High Motor Mount - Step 6

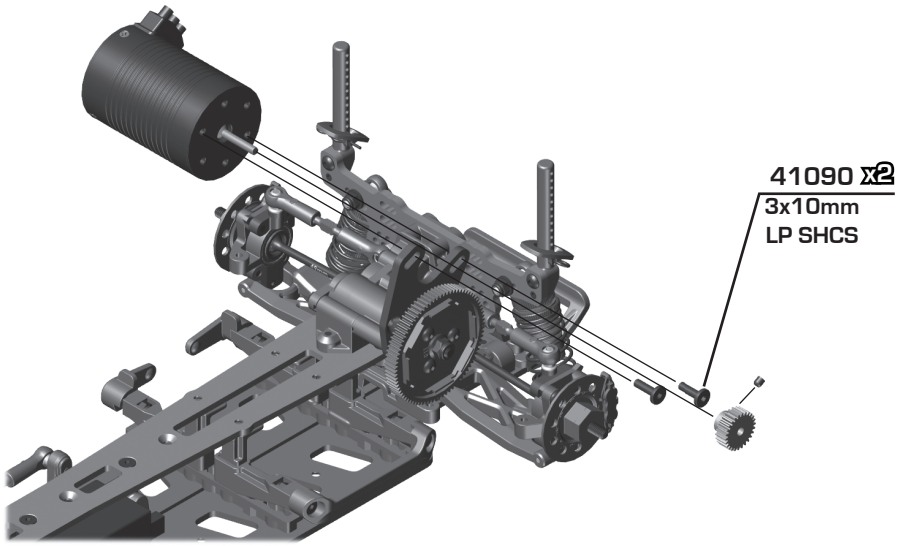

:: Optional Spool Build - Step 1

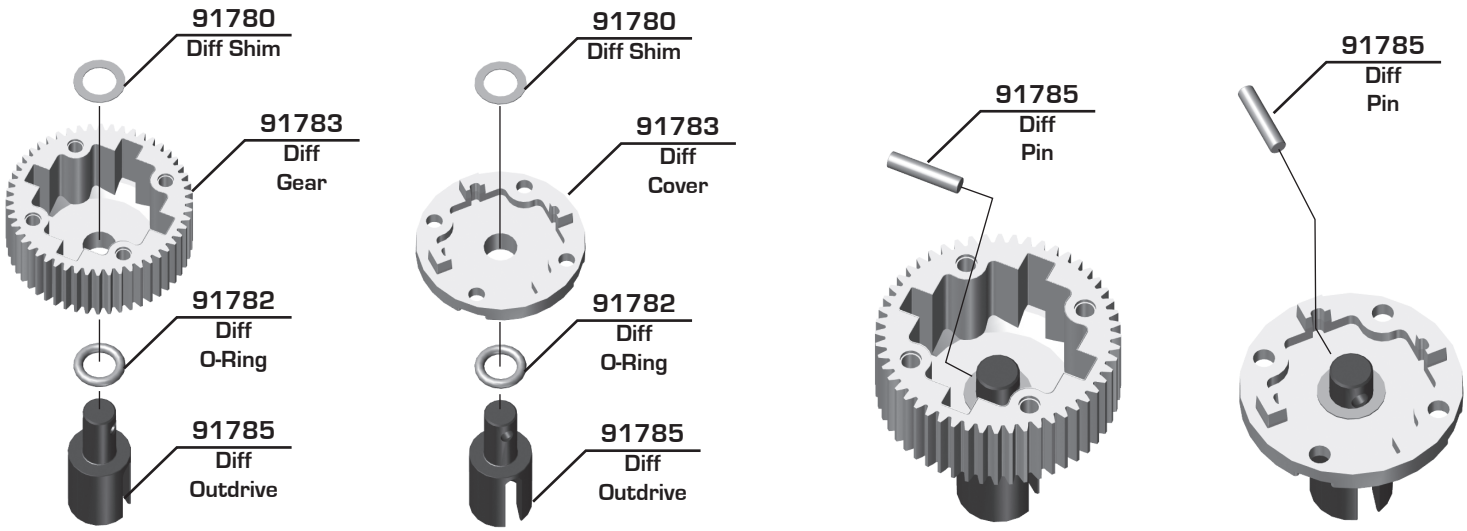

:: Optional Spool Build - Step 2

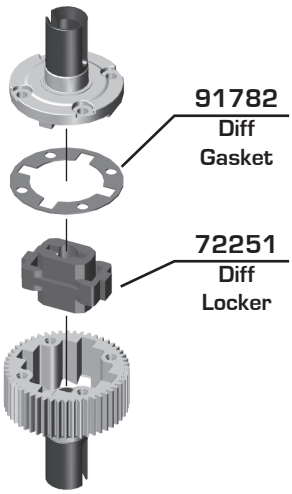

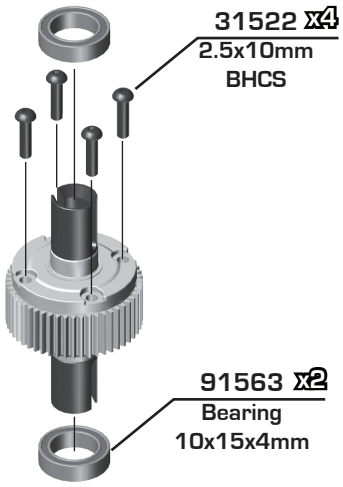



Racers Tip:

Locked Diff:
Recommended for low grip surfaces and smoother driving style.

Gear Diff:
Light grease for higher grip surfaces and 1000cst (80wt) for lower grip surfaces

DC10 1:10 RWD COMPETITION DRIFT KIT

Driver: _____ Event: _____ Track Surface: _____ Qualify: _____

Date: _____ Track: _____ Track Condition: _____ Finish: _____

Front Suspension:

Ride Height:
Camber:
Toe:
Arm Spacing:
Tower Type:
Wheel Hex:
Steering Block KPI:
Caster Block Spacing:

Notes: _____

Upper Arm Insert:

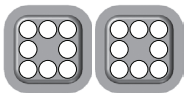

Steering Bellcrank Position:
Up ☐
Down ☐

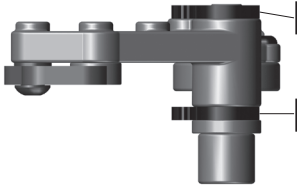

Steering Spacing:
Steering Spacing:

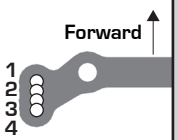

Ball Stud Spacing:
Bump Steer Spacing:
Ball Stud Spacing:

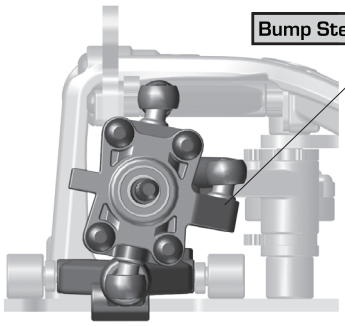

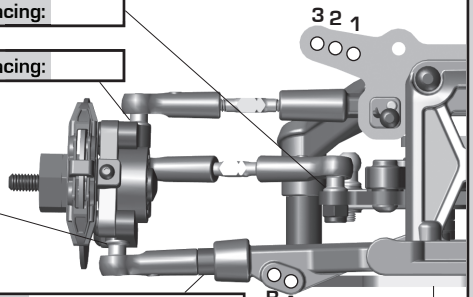

Axle Height:
+3 ☐
+2 ☐
+1 ☐
+0 ☐

Lower Arm Length:
Front Kickup Shim:

Rear Suspension:

Ride Height:
Camber:
Arm Spacing:
Tower Type:
Wheel Hex:
Hub Spacing:

Notes: _____

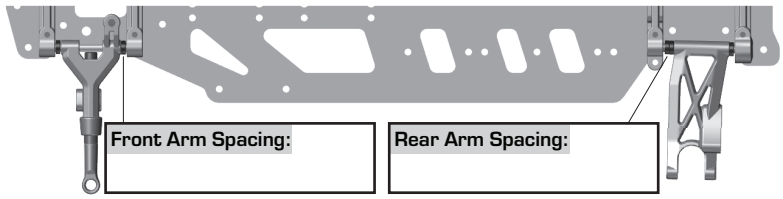

Front Arm Spacing:
Rear Arm Spacing:

Low Motor: ☐
High Motor: ☐

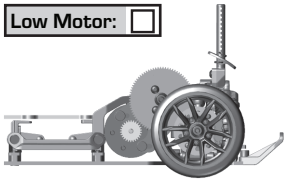

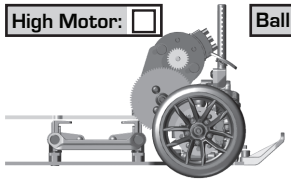

D Mount:
Aluminum ☐ Plastic ☐



Ball Stud Spacing:

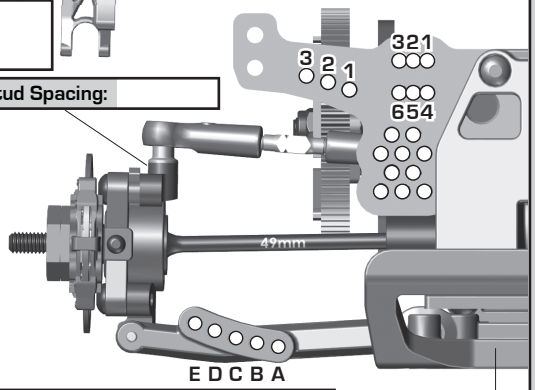

Rear Kickup Shim:

Electronics:

Radio:
Servo:
EPA: Throttle: % Brake: %
ESC:
ESC Settings:
Motor / Wind:
Timing:
Pinion:
Spur:
Motor Position:
Battery:
Weight:
Battery Position:
Fwd: ☐ Back: ☐ High: ☐ Low: ☐ Other: ☐
Notes:
Gyro:
Gyro Settings:
Gyro Mode:
Limit Gain:
Notes:

Drivetrain:

Differential: Ball Diff: ☐
Gear Diff: ☐ Gear Diff Locked: ☐
Diff Setting: _____

Notes:

Tires:

Front Tires:
Front Compound:
Rear Tires:
Rear Compound:
Wheel (F/R):
Notes:

Body, Chassis, Weight:

Body:
Rear Wing:
Chassis Type:
Chassis Weights:
Total Vehicle Weight:

Shocks:

	Front	Rear
Piston:		
Thickness:		
Fluid:		
Spring:		
Limiters:	Int: ____ Ext: ____	Int: ____ Ext: ____
Stroke:		
Shock Length:		
Eyelet Length:	0 ☐ +3 ☐ +6 ☐	0 ☐ +3 ☐ +6 ☐



Alum. Bodies: ☐ Chrome Shafts: ☐ Machined Spacers: ☐

Notes: _____

Vehicle Comments:

Notes: _____

FIND IT ON ASSOCIATEDELECTRICS.COM

CARS & TRUCKS



Vehicle Spare Parts
GO TO:
AssociatedElectrics.com ➡
Team Associated tab ➡
Cars & Trucks ➡
Scroll to your vehicle ➡
Parts & Accessories link

SETUP SHEETS & MANUALS



Setups and Manuals
GO TO:
AssociatedElectrics.com ➡
Team Associated tab ➡
Manuals & Setups ➡
Scroll to your vehicle

A-TEAM APPS

WEB APPS

Tuning Guides & Tips
GO TO:
AssociatedElectrics.com ➡
Support ➡
A-Team Apps

ASSOCIATED ELECTRICS
Since 1964

Associated Electrics, Inc.
21062 Bake Parkway Lake Forest, CA 92630 USA

call: (949) 544-7500 - fax: (949) 544-7501

Check out the following web sites for all of our kits, current products, new releases, setup help, tips, and racing info!

www.AssociatedElectrics.com

FOLLOW US ON SOCIAL MEDIA