1:10 Scale 4WD Electric Off Road
Competition Buggy Kit




# TEAM ASSOCIATED

## 1:10 Scale 4WD Electric Off Road Competition Buggy Kit Manual

#6055 RC104WD Factory Team Buggy Kit

WeAreAE

CHAMPIONS by DESIGN

AssociatedElectrics.com

TEAM ASSOCIATED

## :: Introduction

Thank you for purchasing this Team Associated product. This assembly manual contains instructions and tips for building and maintaining your new Kit. Please take a moment to read through this manual to help familiarize yourself with these steps.

We are continually changing and improving our designs; therefore, actual parts may appear slightly different than in the illustrations. New parts will be noted on supplementary sheets located in the appropriate parts bags.
Check each bag for these sheets before you start to build.

## :: KIT Features

- 4WD Bronze anodized 6061-T6 aluminum monocoque tub chassis, nose plate and cut motor plate
- Anodized blue CNC pulleys all around
- All black plastics
- Factory Team captured hinge pins all around
- Shorty inline or sideways battery capabilities
- Fully adjustable four-wheel independent suspension
- Kashima bronze anodized big bore shocks
- Race proven front and rear stealth transmissions
- Adjustable ball differentials front and rear
- Exceptional ground clearance with low center of gravity
- Clear Mirage Pro body and B7 rear wing
- B7 rear wing mounts
- Carbon fiber big bore compliant front shock tower
- Carbon fiber big bore compliant rear shock tower with B7 wing mount integrated
- Precision ball bearings throughout
- Heavy duty adjustable 3.5mm turnbuckles all around
- Front and rear CVA driveshafts
- Durable low friction center Belt and tension system
- Long front arm geometry
- All new front caster and spindle assembly designed for RC104wd
- Updated Rear Bulkhead and chassis stiffener
- Carbon fiber rear transmission brace
- 12mm hex wheels all around
- 12mm hex system front and rear
- HD metric ball studs throughout
- Race proven V2 slipper clutch system
- All new 4wd specific worlds style bell crank system

## :: Additional

Your new RC10 4WD FT Kit comes as a kit. There are some items you will need to complete your kit (refer to website for suggestions):

- R/C two channel surface frequency radio system
- Electronic Speed Control (ESC)
- R/C Electric Motor
- Steering Servo
- Peak detection battery charger
- 2S, 7.4V Lipo stick battery or 7.2V NiMH battery
- Thread Lock (AE #1596)
- Polycarbonate specific paint
- Pinion gear, size to be determined by type and wind of motor you use

Tools included:
- Allen wrenches (.035", .050", 1/16", 3/32")
- Shock building tool

- Buggy front and rear tires/inserts

## :: Other Helpful Items

- Silicone Shock Fluid (Refer to website for complete listings)
- Tire Adhesive (AE #1697)
- Body Scissors (AE #1737)
- Reamer / Hole Punch (AE #1499)
- Shock Pliers (AE #1681)
- Green Slime shock lube (AE #1105)
- Calipers or a Precision Ruler
- Wire Cutters / Hobby Knife
- Needle Nose Pliers
- Soldering Iron

## :: Hardware - 1:1 Scale View

### Cap Head (shcs)

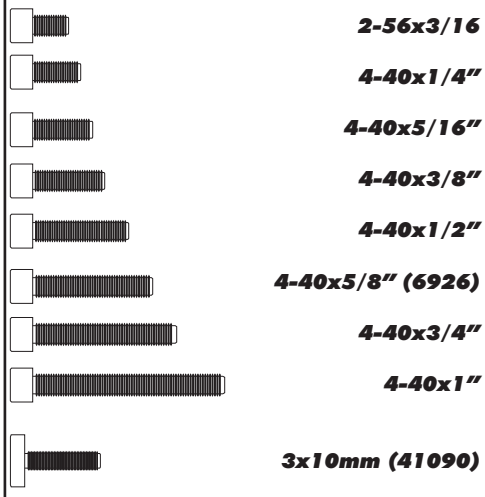

2-56x3/16
4-40x1/4"
4-40x5/16"
4-40x3/8"
4-40x1/2"
4-40x5/8" (6926)
4-40x3/4"
4-40x1"
3x10mm (41090)

### Flat Head (fhcs)

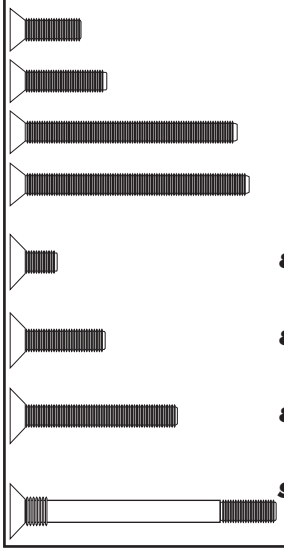

4-40x3/8"
4-40x1/2"
4-40x1 3/16"
4-40x1 1/4"
8-32x1/4" (6316)
8-32x1/2" (6316)
8-32x7/8" (6316)
Servo Saver Screw, Long (7306)

### Button Head (bhcs)

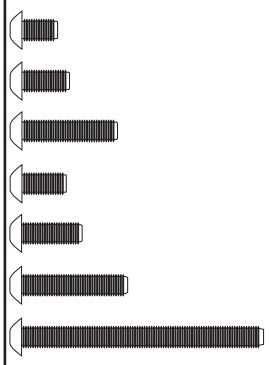

4-40x3/16"
4-40x1/4"
4-40x1/2"
3x6mm (31531)
3x8mm (31532)
3x14mm (25187)
3x32mm

### Clips



E-clip 1/8" (6299)

### Shims and Washers



FT Ballstud Washer, Aluminum (2mm) (31383)
.030 Nylon Spacer (4187)
Shock Thin Washer
Shock Thick Washer
3/16" Axle Shim
#4 Washer
Bellcrank Shim
Diff Thrust Washers
5mm x 9.5mm 0.17mm
#8 Aluminum Thick Washer

### Nuts (lock/plain)

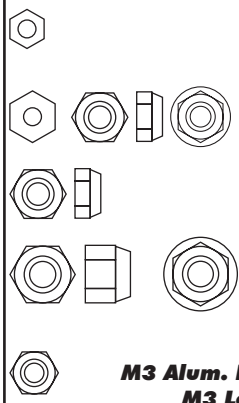

4-40 Small Pattern Plain Nut
4-40 Nuts
5-40 Locknut (6629)
8-32 Steel Locknut
M3 Nut (91477)
M3 Alum. Locknut, Blue (31550)
M3 Locknut, Black (25215)

### Bearings

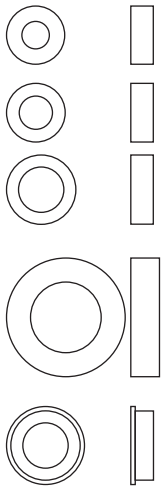

5/32 x 5/16 x 1/8
1/4 x 3/8 x 1/8 (8682)
3/16 x 3/8 x 1/8 (3977)
3/8 x 5/8 x 5/32(3976)
1/4 x 3/8 x 1/8 Flanged

### Set Screws

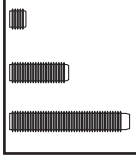

4-40x3/32"
4-40x5/16"
3x16mm (4689)

### Diff Balls



5/64 Thrust Balls
3/32 Diff Balls

### Ballstuds

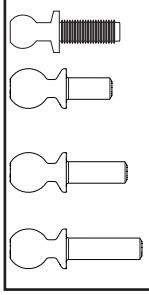

Silver 8mm Long (31284)
HD 6mm (91047)
Titanium HD 6mm (91751)
HD 8mm (91048)
Titanium HD 8mm (91752)
HD 10mm (91049)
Titanium HD 10mm (91753)

### Notes:

## :: Table of Contents


1..... Cover

2..... Introduction

3.....1:1 Hardware “Fold Out”

4..... Table of Contents

5.....Nose Plate / Steering Build
(Bag A) (Bag F)

6..... Differential Build
(Bag B)

7.....Front Transmission Build
(Bag B)

8.....Rear Transmission Build
(Bag B)

9.....Front Suspension Build
(Bag C)

12.....Rear Bulkhead Build
(Bag D)

14.....Rear Suspension Build
(Bag E)

15.....Turnbuckles Build
(Bag F)

16.....Shocks Build
(Bag G)

19..... .....Chassis Build
(Bag H)

20.....Servo/Chassis Stiffeners Build
(Bag I)

21.....Wheels, Tires and Body Install
(Bag J)

24 - 25.....Setup Sheets

26..... Back Cover


## :: Notes



This symbols indicates a special note or instruction in the manual.



***There is a 1:1 hardware foldout page in the front of the manual. To check the size of a part, line up your hardare with the correct drawing until you find the exact size.***


***Associated Electrics, Inc.***
***21062 Bake Parkway***
***Lake Forest, CA 92630***

***Customer Service***
***Tel: 949.544.7500***
***Fax: 949.544.7501***

***http://www.AssociatedElectrics.com • • http://www.instagram.com/teamassociatedrc/ • http://www.facebook.com/TeamAssociated/***

## :: Nose Plate / Steering Build - Bag A - Step 1

Washers are used to adjust to your preffered body height.

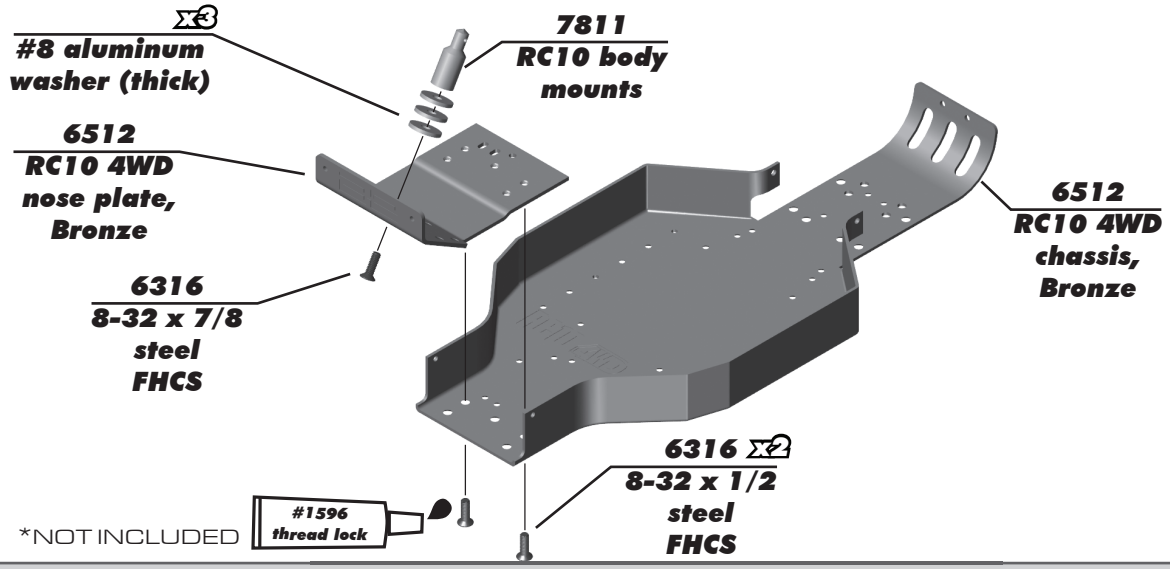


## :: Nose Plate / Steering Build - Bag A - Step 2

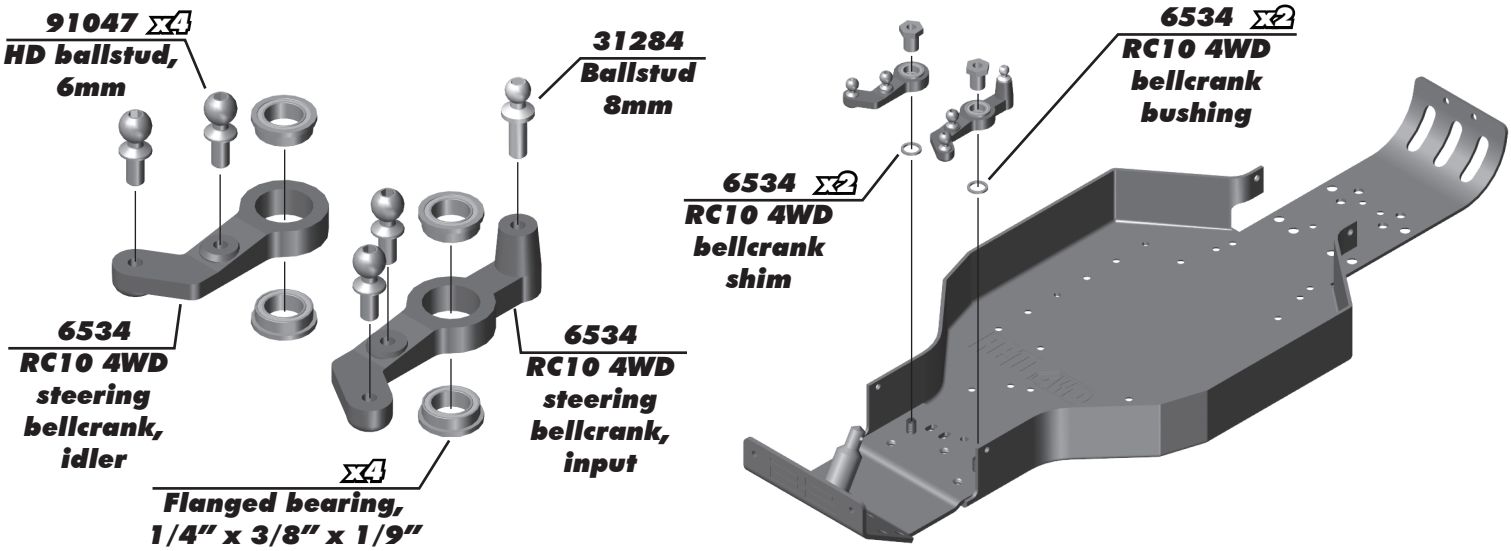


## :: Nose Plate / Steering Build - Bag F - Step 3

The steering rack turnbuckle parts are in bag F.

Note the direction of the ball cups!

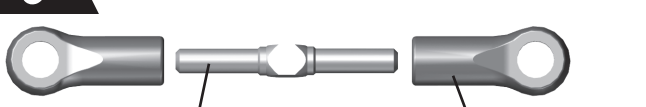


Orient the notch to the left throughout the car. It indicates which end has the left hand threads!



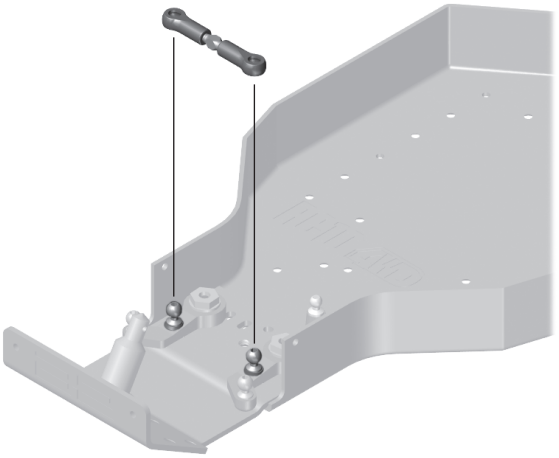

**Steering Rack Turnbuckle 0.31" (8mm)**

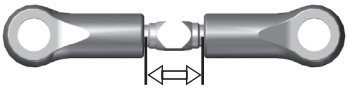

## :: Differential Build - Bag B - Step 1

**Build x2 Diffs!**

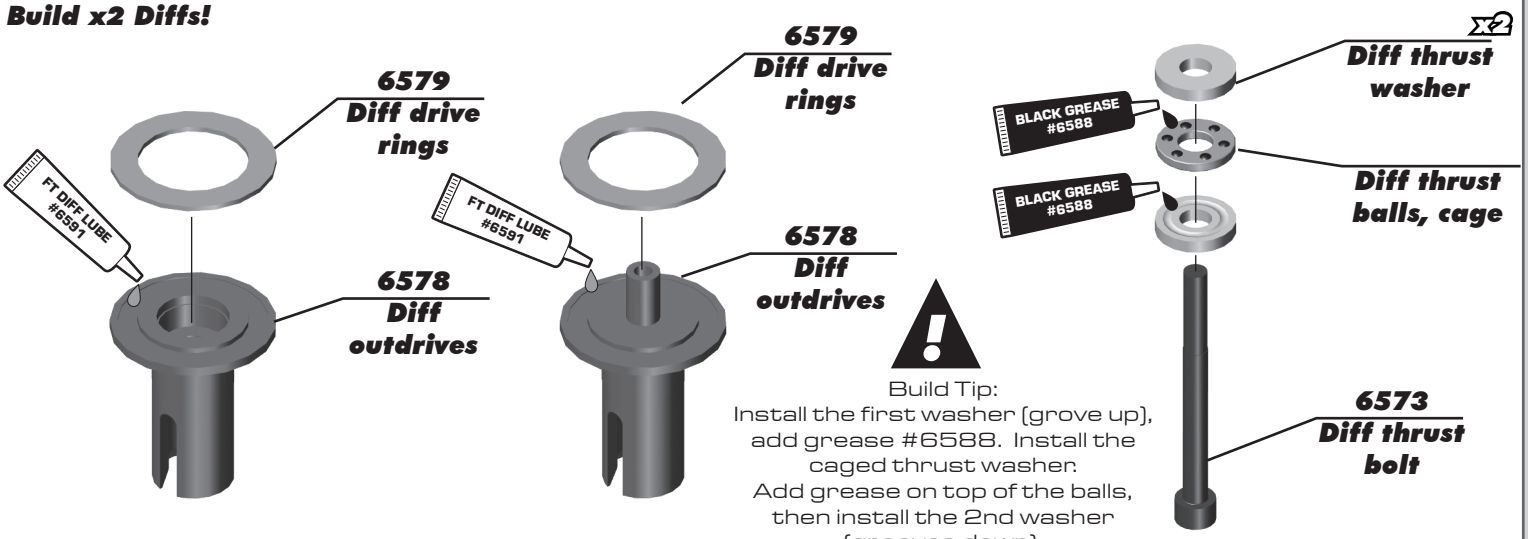


Build Tip:
Install the first washer (grove up), add grease #6588. Install the caged thrust washer.
Add grease on top of the balls, then install the 2nd washer (grooves down).

## :: Differential Build - Bag B - Step 2

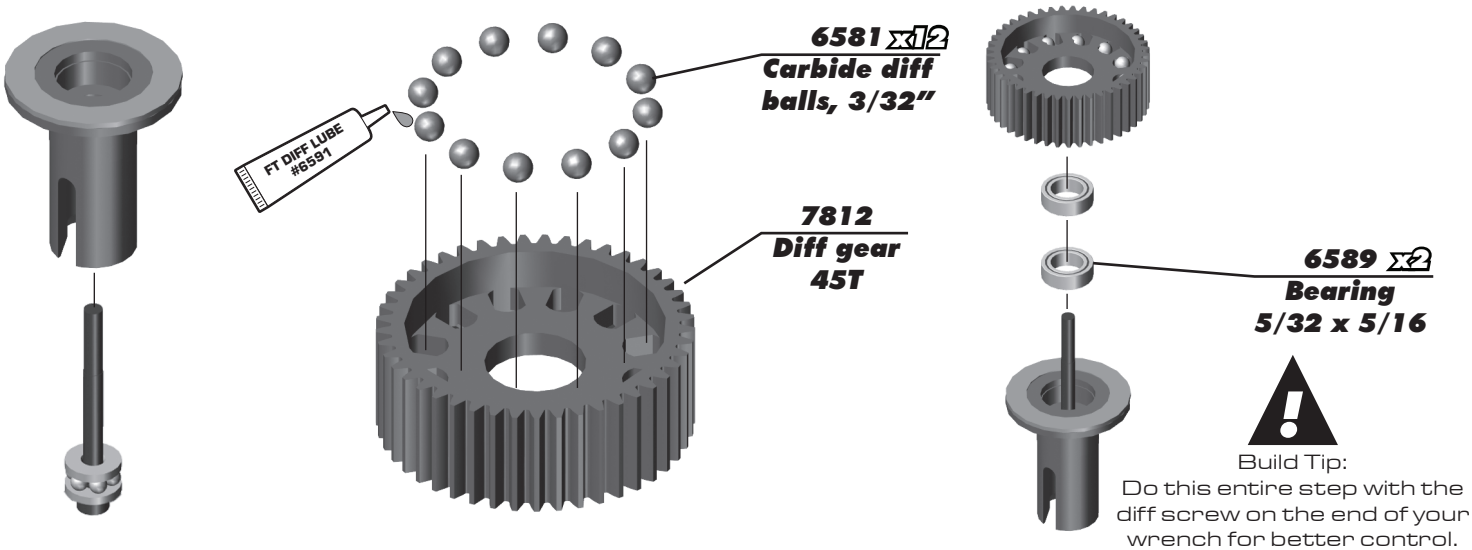


Build Tip:
Do this entire step with the diff screw on the end of your wrench for better control.

## :: Differential Build - Bag B - Step 3

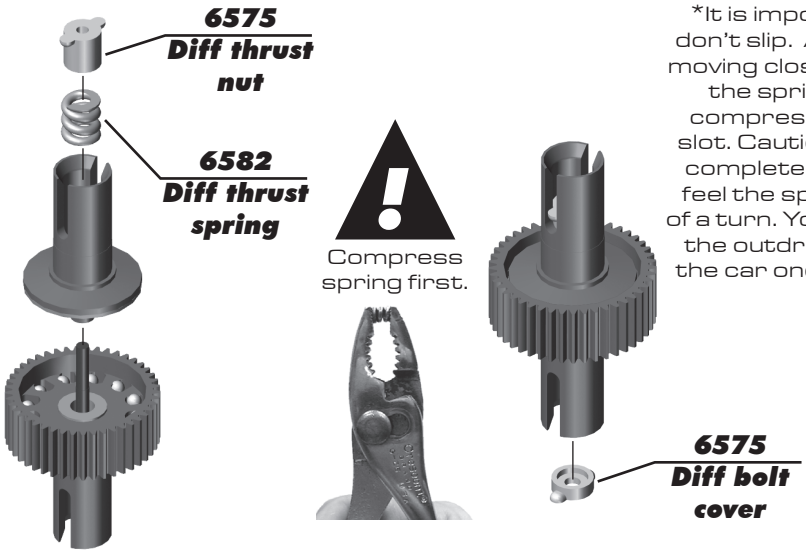


*It is important to tighten your RC10 4WD Ball diffs x2 so they don't slip. As you tighten the diff bolt, you will notice the T-nut ears moving closer to the bottom of the outdrive slot. This compresses the spring behind the T-nut. The spring should be completely compressed at the same time the T-nut reaches the end of the slot. Caution! Pay close attention to the feeling when the spring is completely compressed. Do not overtighten the bolt. When you feel the spring completely compressed, loosen the diff bolt 1/4" of a turn. Your diff should now operate smoothly with resistance as the outdrives move in opposite directions. After you have driven the car once, recheck the diff settings as they may loosen up with a new differential system.

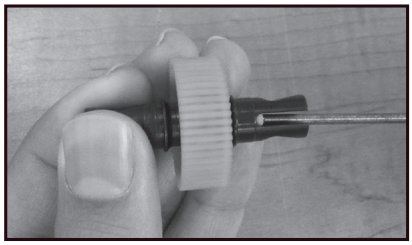

## :: Differential Build - Bag B - Step 4

Front diff settings and setup notes / tips:

When installing your Ball Differentials, make sure to install the Diff Bolt on the same side as the Top Shaft End.

- Front Diff: Diff Bolt should be on the Left Side
- Rear Diff: Diff Bolt should be on the Right Side

Tighter Front Diff: Tighter front diff compared to the rear will give you more on power steering and off power stability.
Looser Front Diff: Looser front diff compared to the rear will provide more off power steering and on power stability.

Rear diff settings and setup notes / tips:

Tighter Rear Diff: Tighter rear diff compared to the front will provide more rear end stability.
Looser Rear Diff: Looser rear diff compared to the front will provide more off power corner speed and on power stability.

## :: Front Transmission Build - Bag B - Step 1

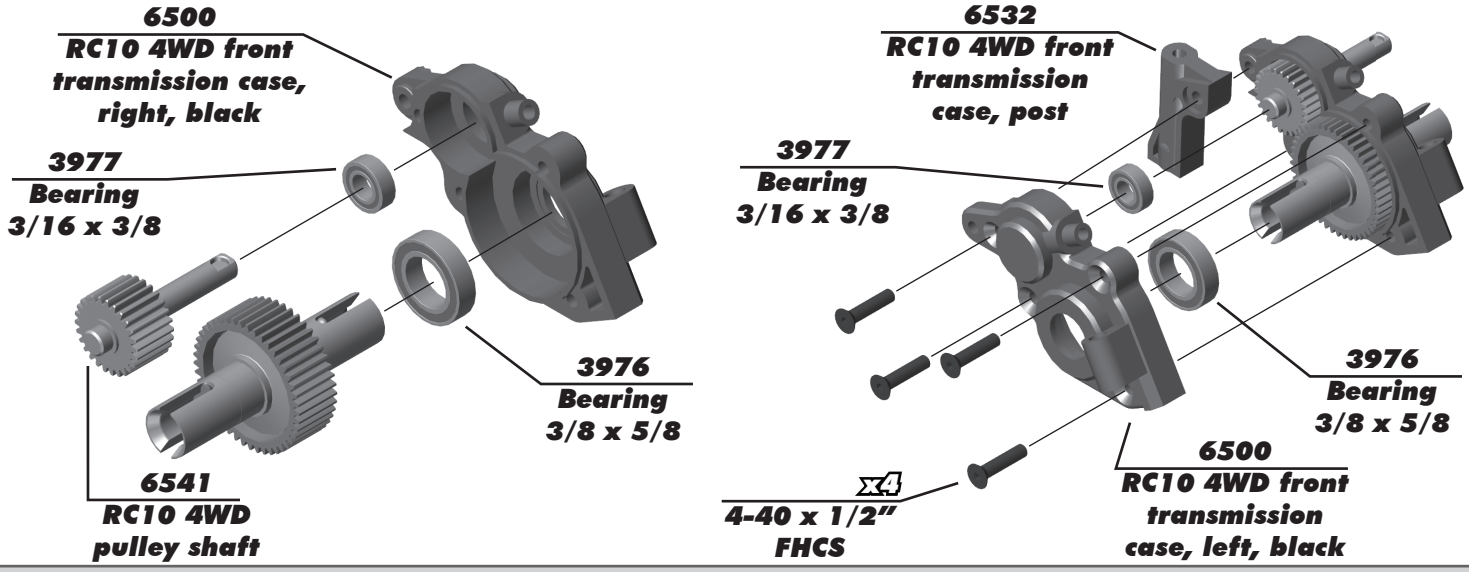


## :: Front Transmission Build - Bag B - Step 2

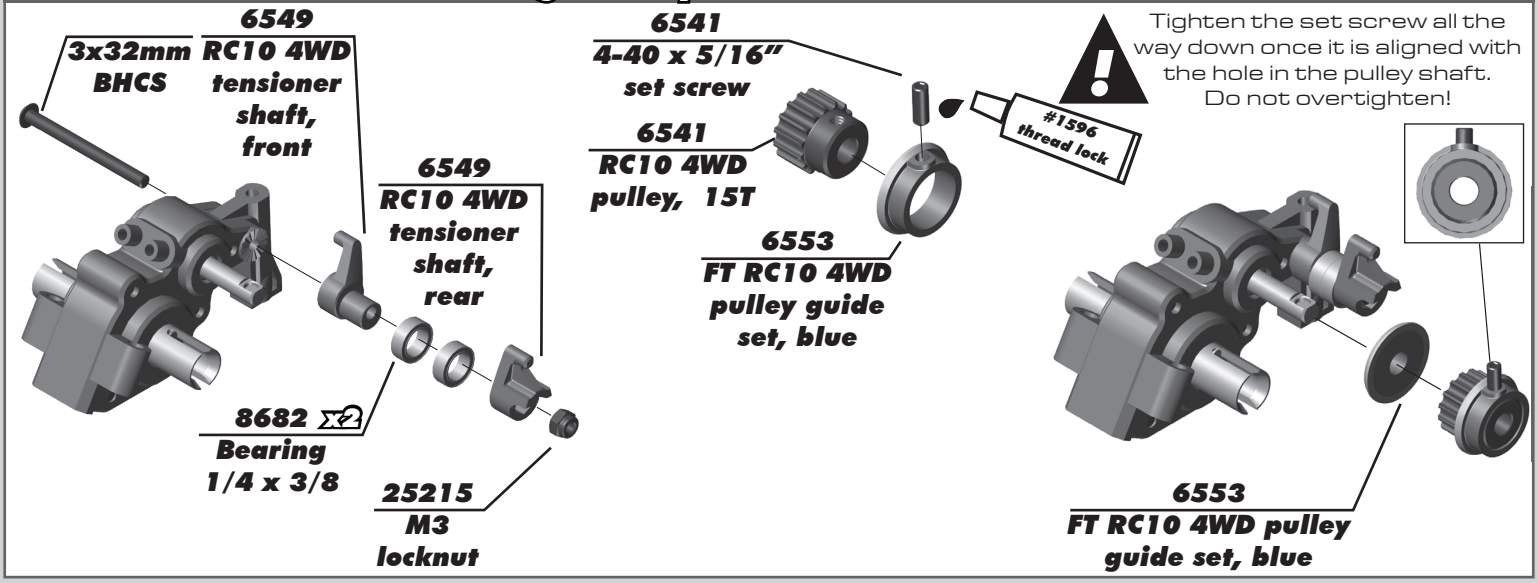

## :: Rear Transmission Build - Bag B - Step 1

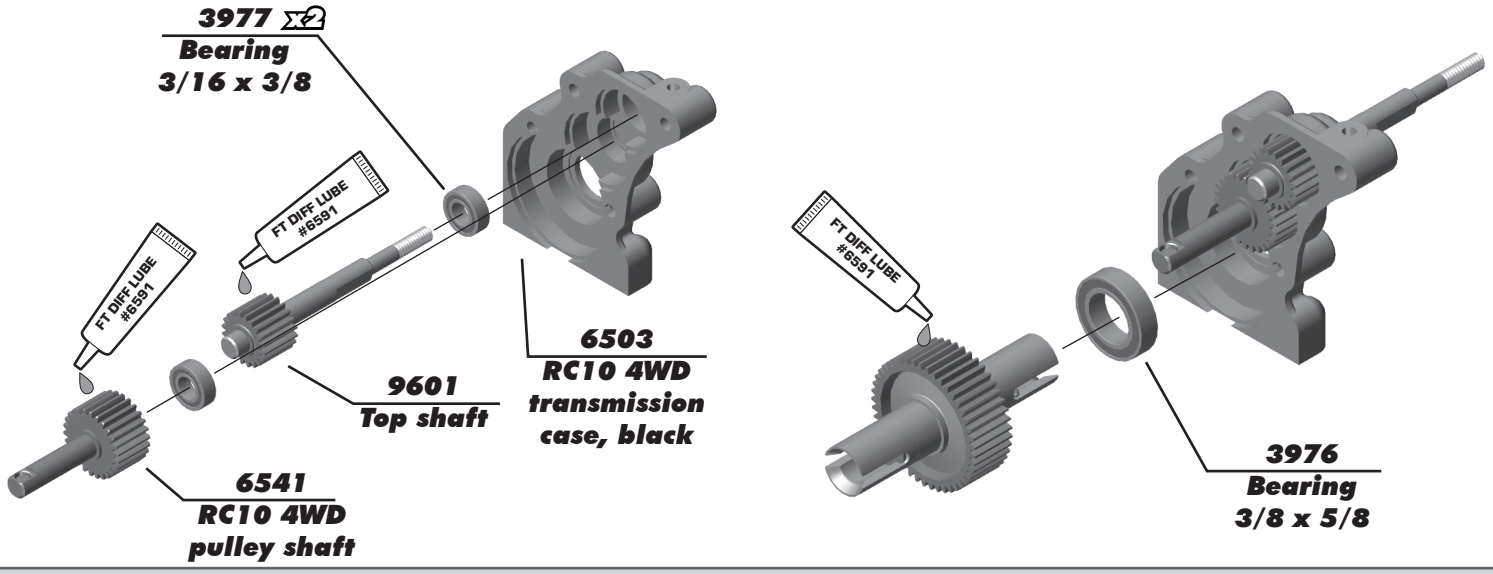


## :: Rear Transmission Build - Bag B - Step 2

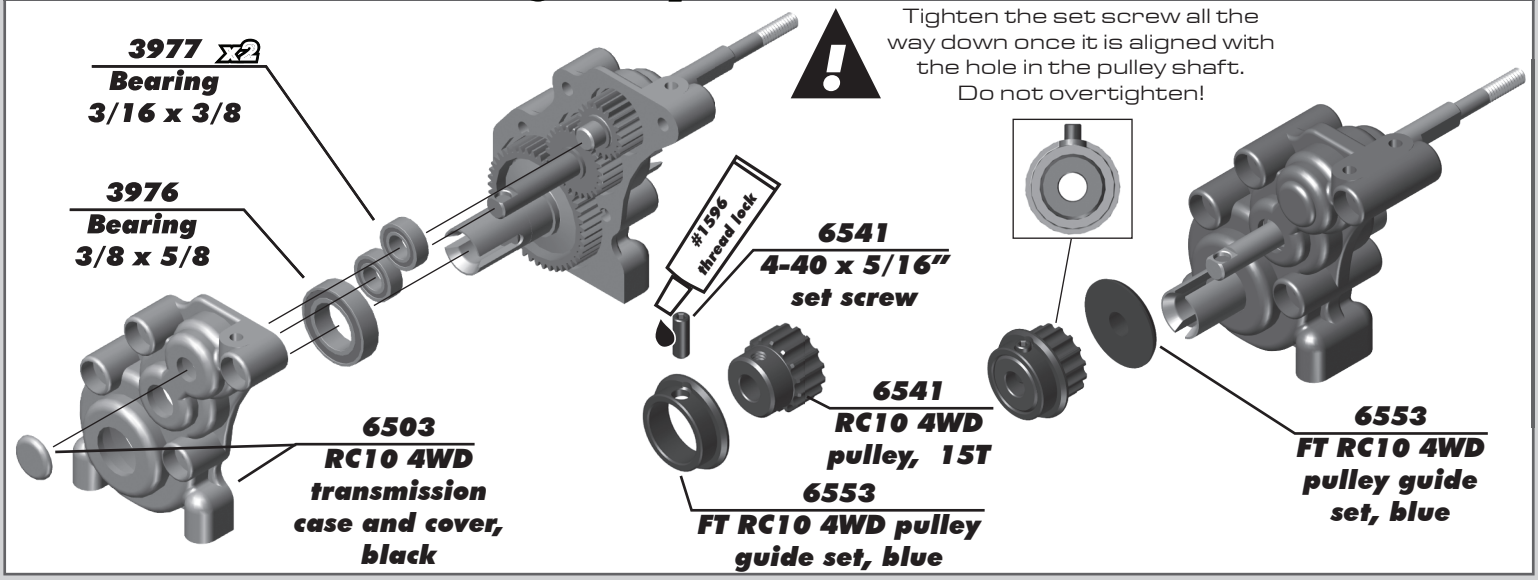


## :: Rear Transmission Build - Bag B - Step 3

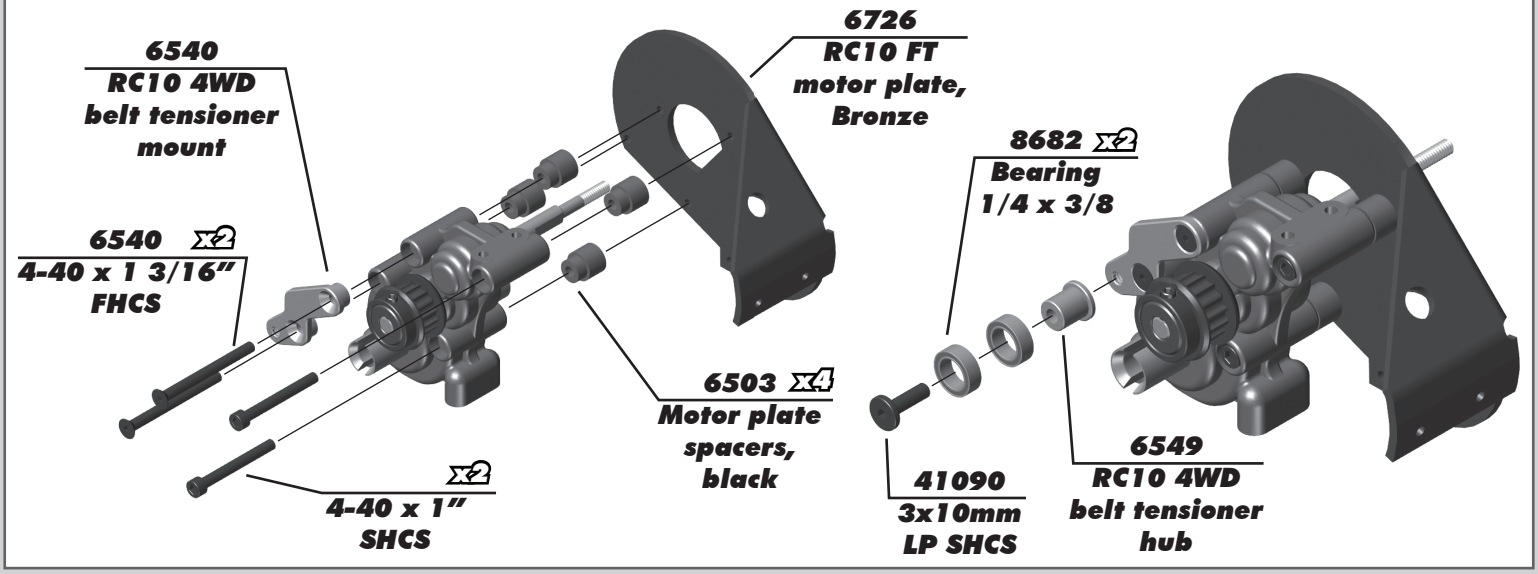

## :: Rear Transmission Build - Bag B - Step 4

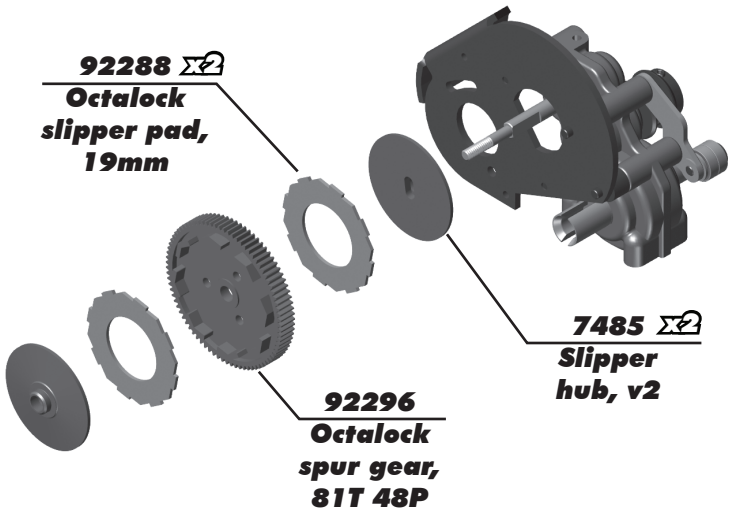


You can get the slipper spring and adapter together in #7486

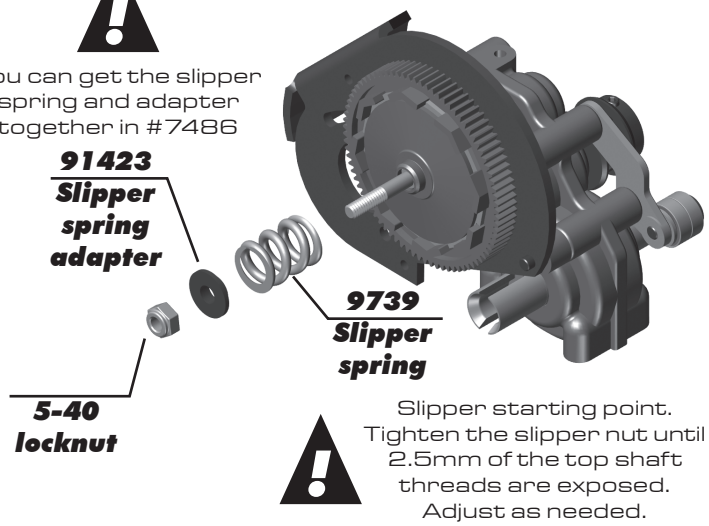


Slipper starting point. Tighten the slipper nut until 2.5mm of the top shaft threads are exposed. Adjust as needed.

## :: Rear Transmission Build - Bag B - Step 5

Slipper Clutch:
On high bite tracks:

The slipper clutch setting is very important on higher bite tracks. Without much wheel spin, The slipper clutch will need to be set properly to engage under heavy braking to prevent the belt from skipping. The belt is on the same rear top shaft as the slipper system. IF the slipper is set too tight, this can cause issues with belt management. Recommended slipper clutch setting on high bite tracks = 2mm threads showing.

Caution: It is also recommended to set your esc brakes accordingly, too much brake can cause issues with the belt and slipper system.

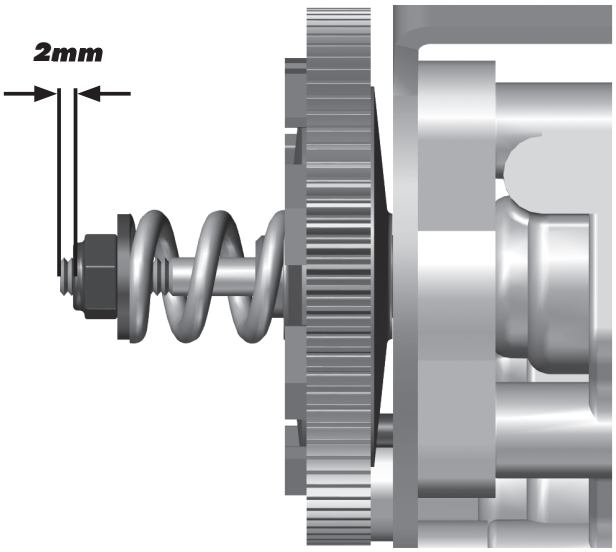


## :: Front Suspension Build - Bag C - Step 1

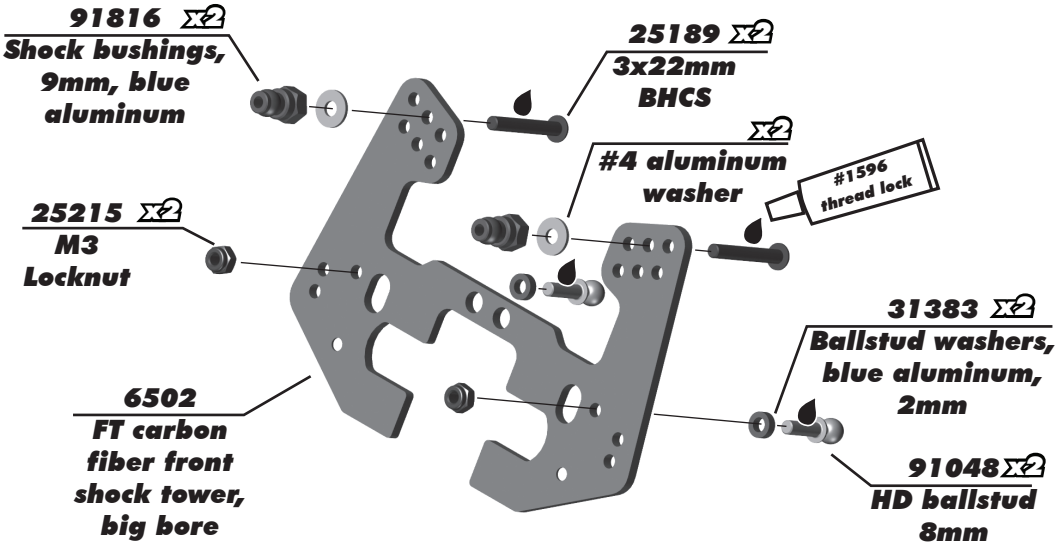


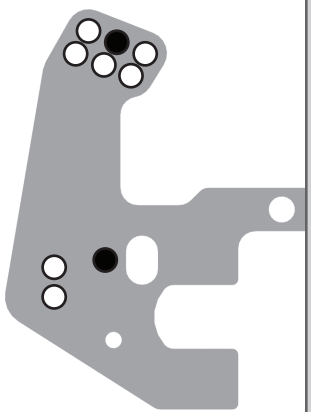

## :: Front Suspension Build - Bag C - Step 2

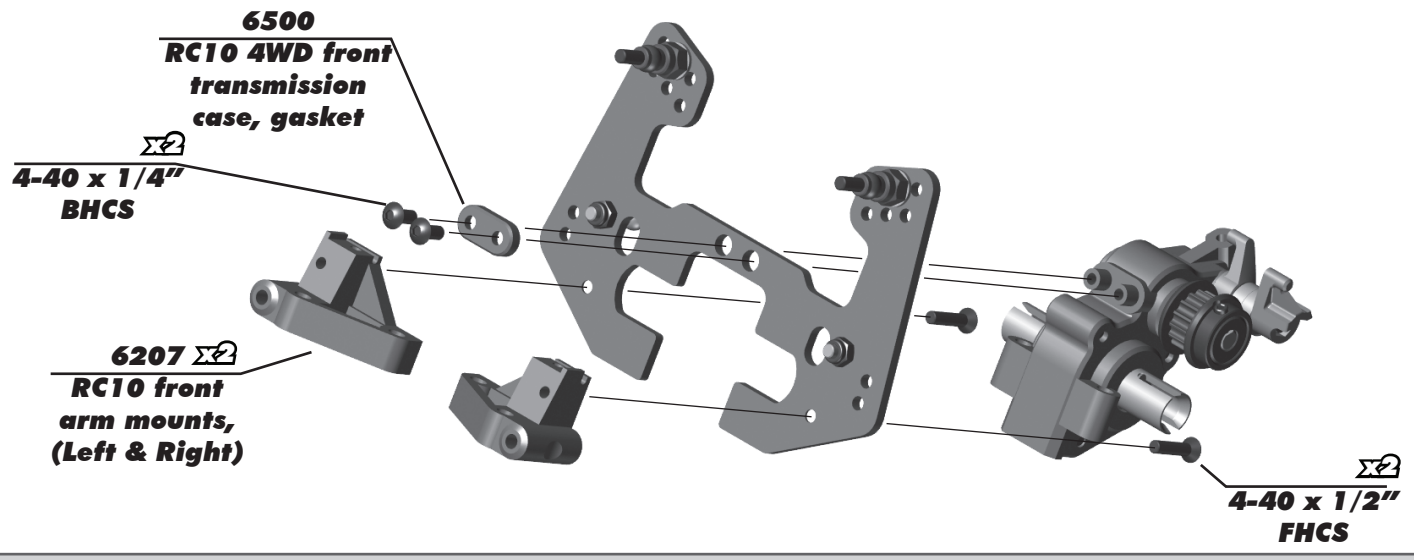


## :: Front Suspension Build - Bag C - Step 3

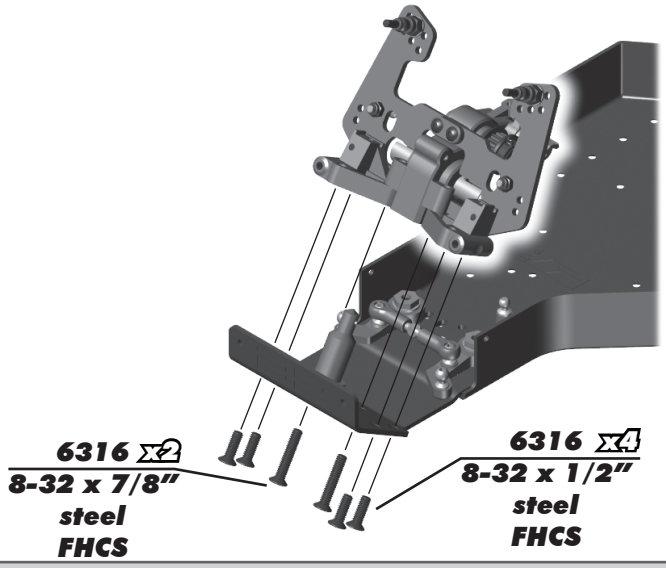


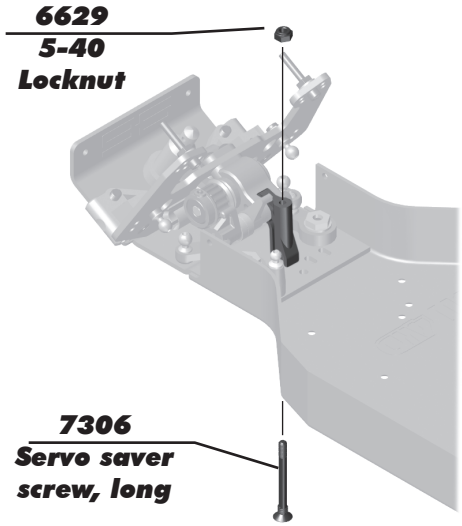


## :: Front Suspension Build - Bag C - Step 4

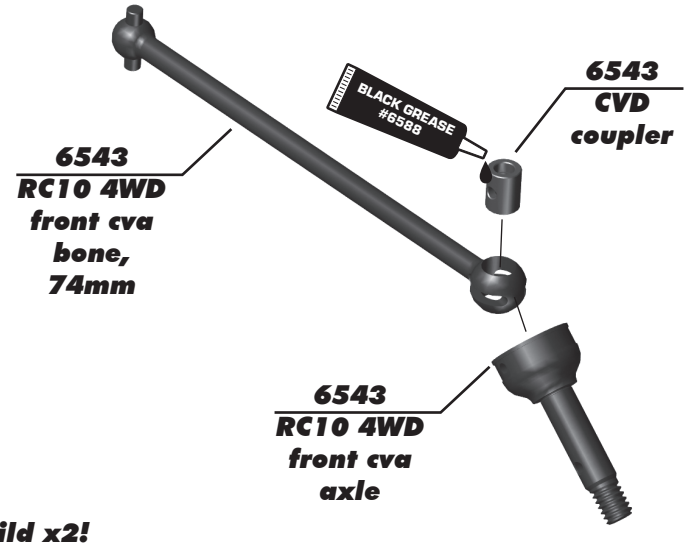


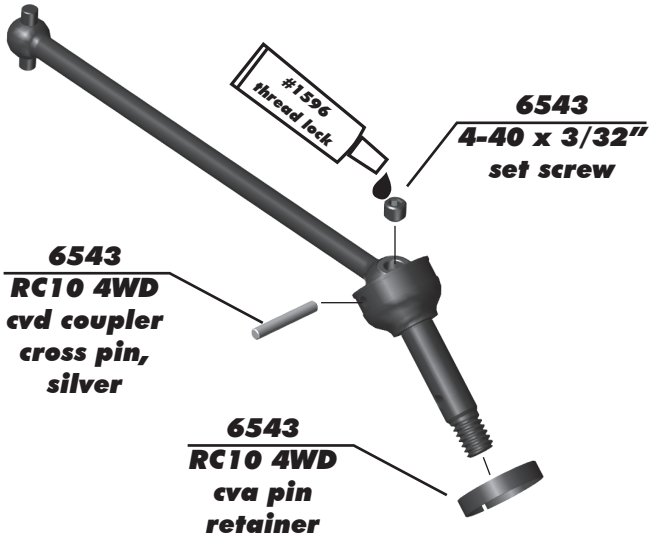


Build x2!

## :: Front Suspension Build - Bag C - Step 5

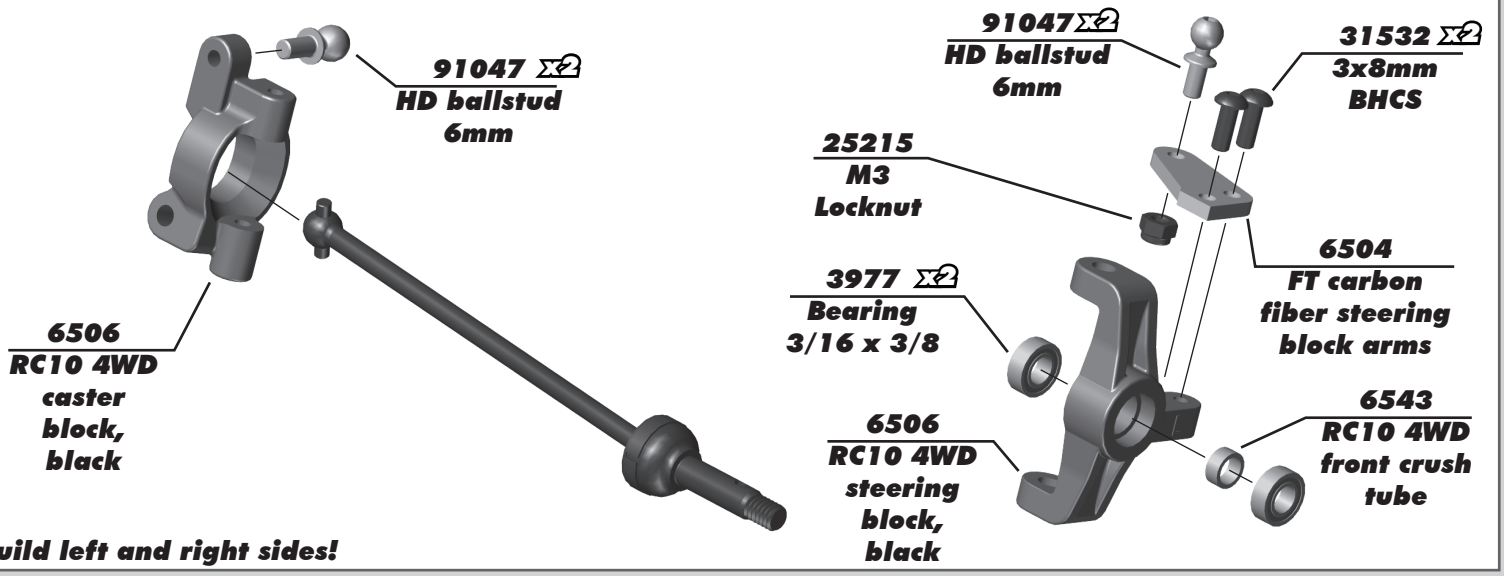


**Build left and right sides!**

## :: Front Suspension Build - Bag C - Step 6

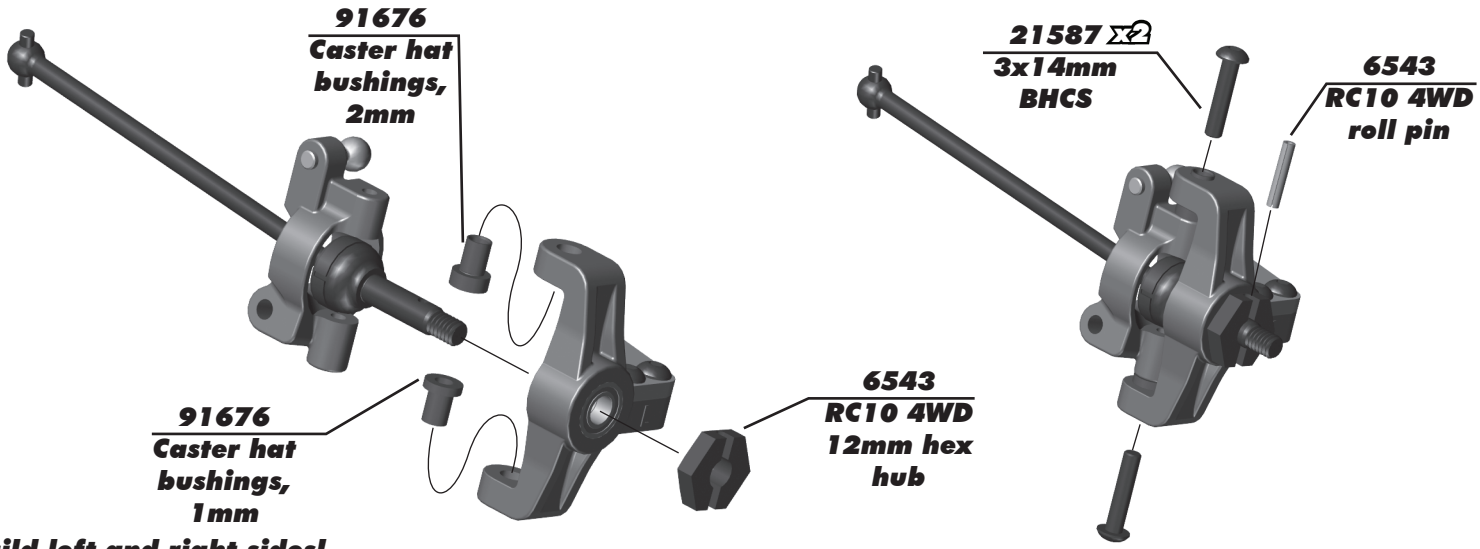


**Build left and right sides!**

## :: Front Suspension Build - Bag C - Step 7

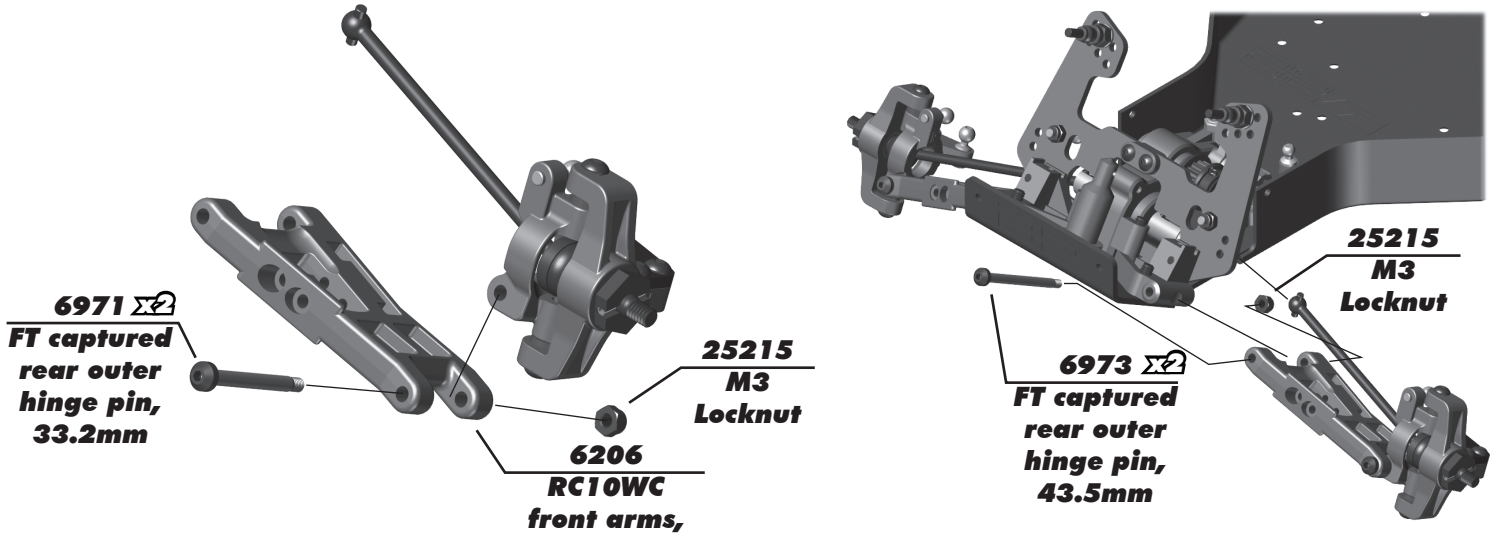


**Build left and right sides!**

**Build left and right sides!**

## :: Rear Bulkhead Build - Bag D - Step 1

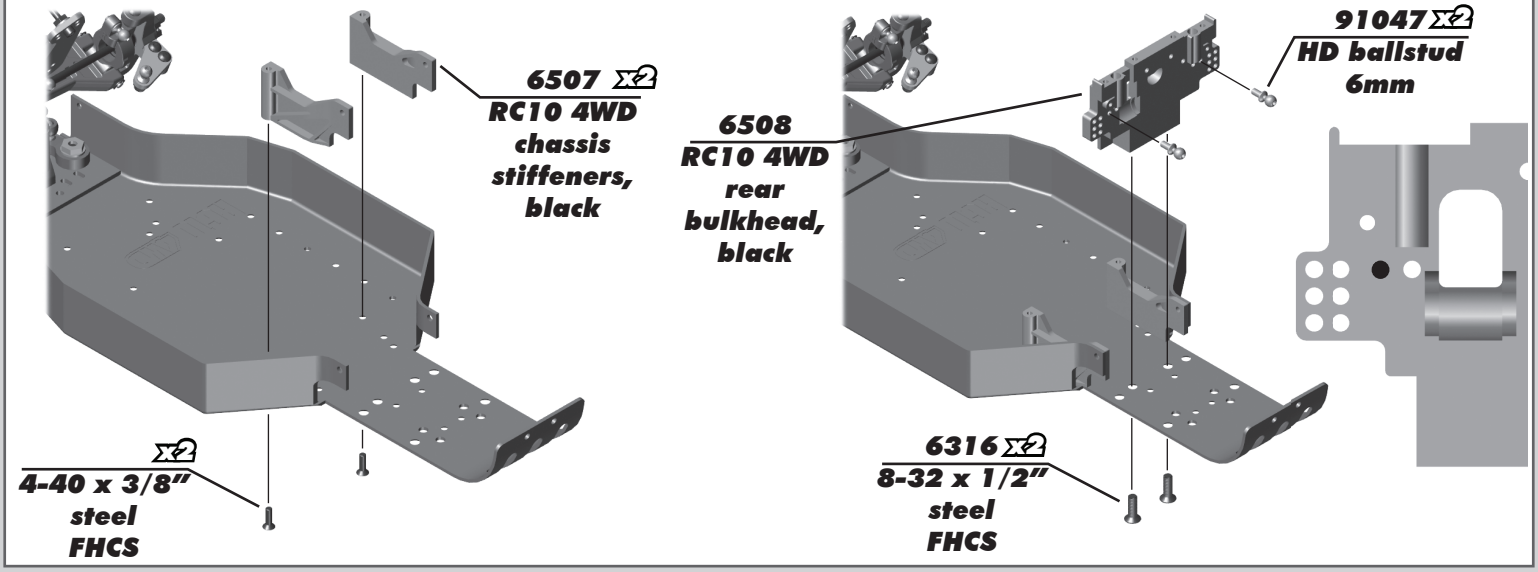


## :: Rear Bulkhead Build - Bag D - Step 2

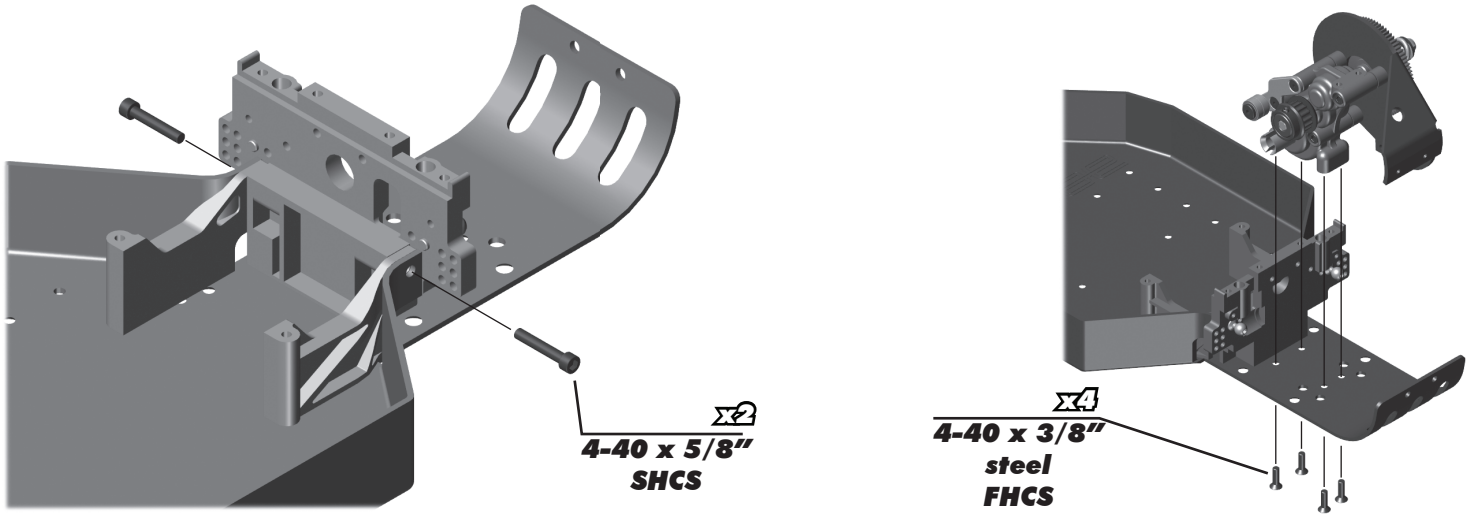


## :: Rear Bulkhead Build - Bag D - Step 3

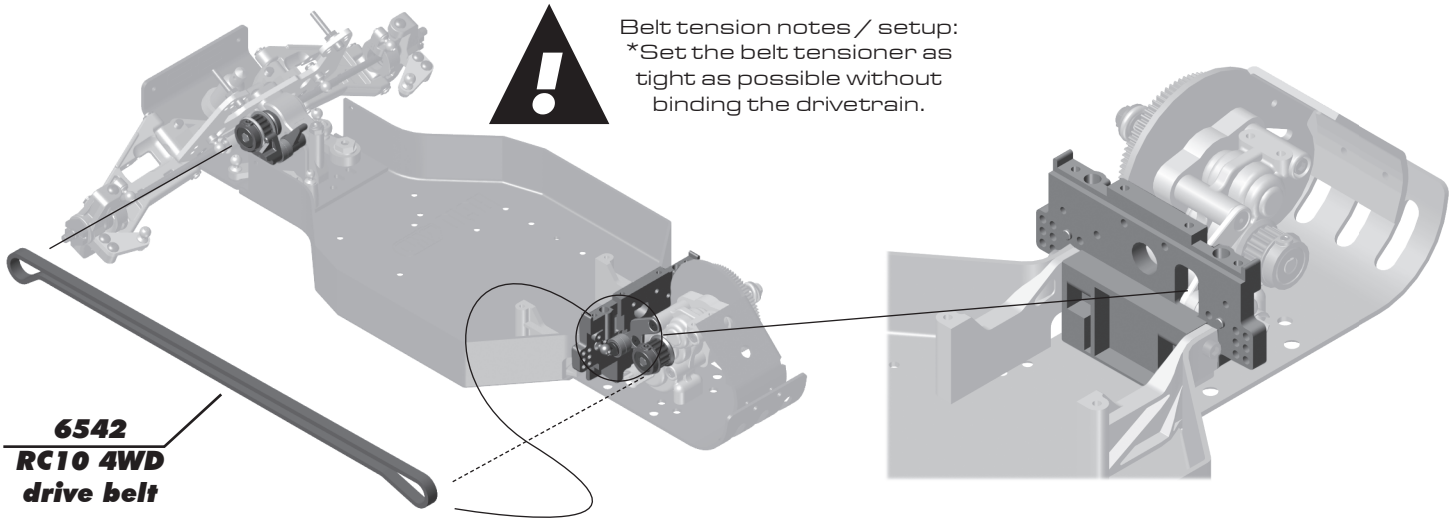

## :: Rear Bulkhead Build - Bag D - Step 4

Belt Tensioner:

The belt tension is adjustable. The “inner” lever is the adjustment Lever. To tighten the belt, loosen the main bolt on the tension system and rotate the adjustment lever towards the front of the vehicle.

To loosen the belt, adjust the lever the opposite way towards the back of the vehicle.
The inner lever keys into notches so one click at a time is recommended for adjustments.

The outer lever is a guide for the belt.
For a new car / belt, it is recommended to start around 12 O Clock on the adjustment lever.
(Straight up and Down)

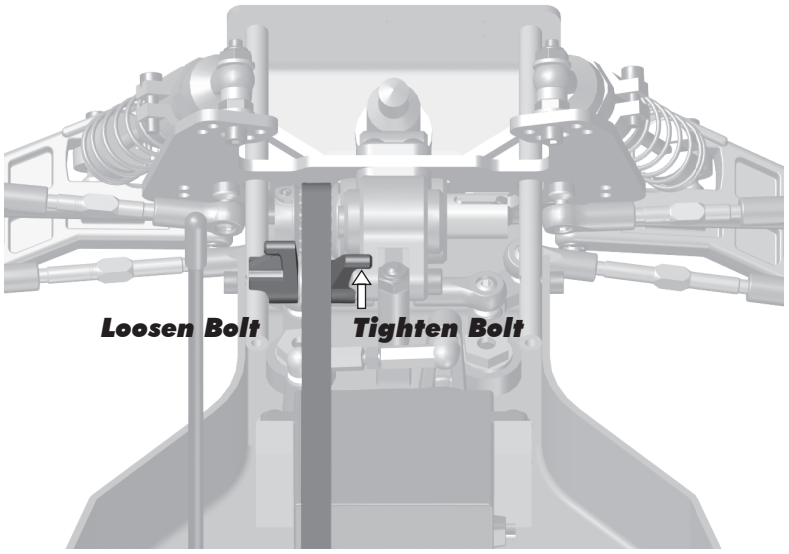


## :: Rear Bulkhead Build - Bag D - Step 5

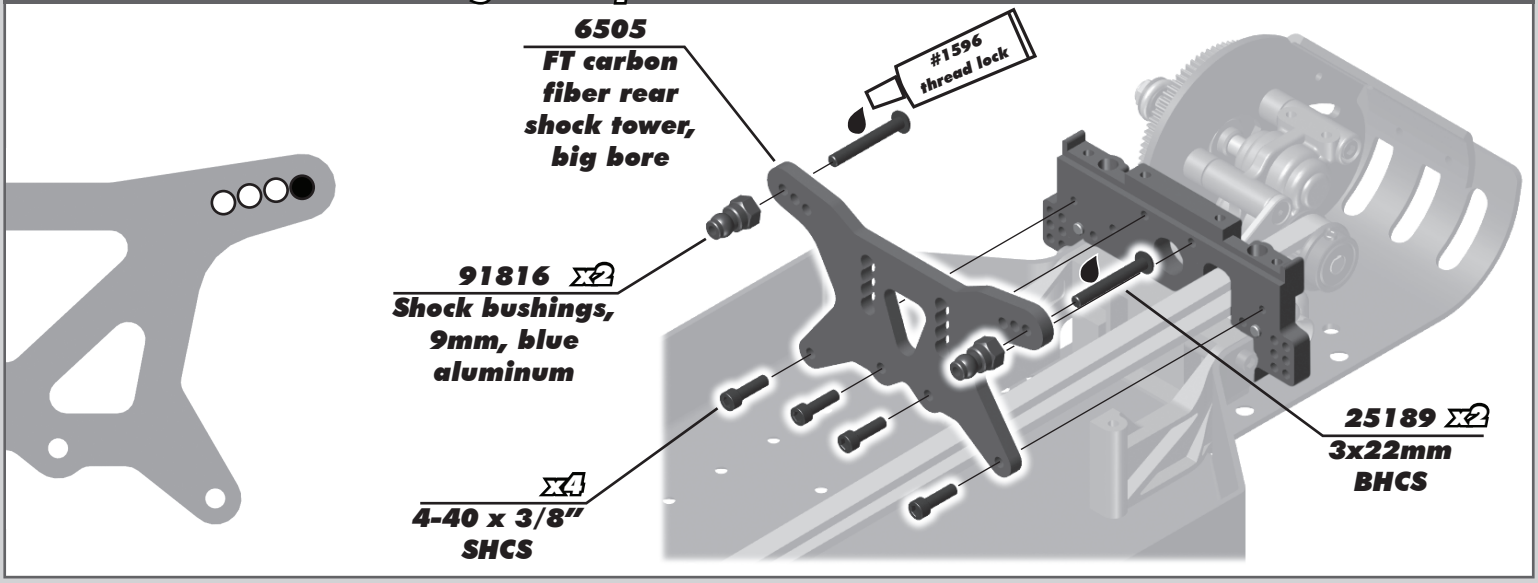


## :: Rear Bulkhead Build - Bag D - Step 6

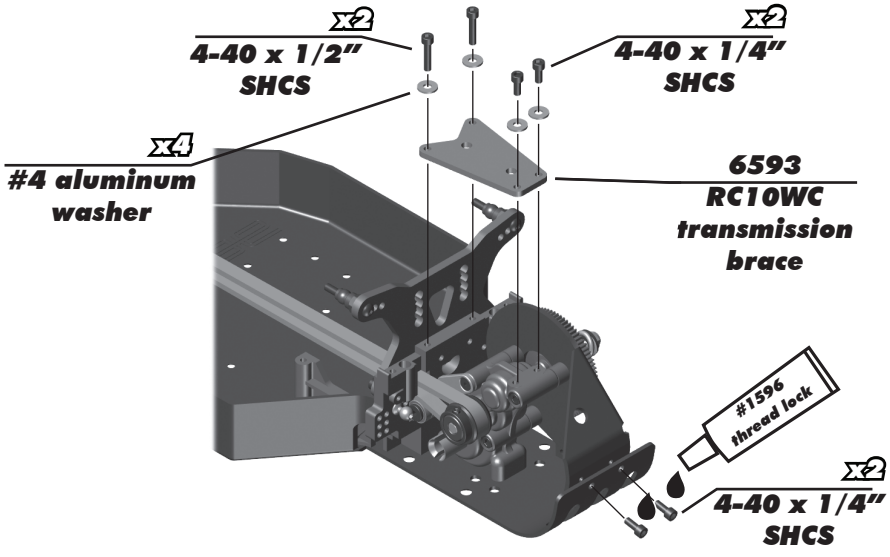

## :: Rear Suspension Build - Bag E - Step 1

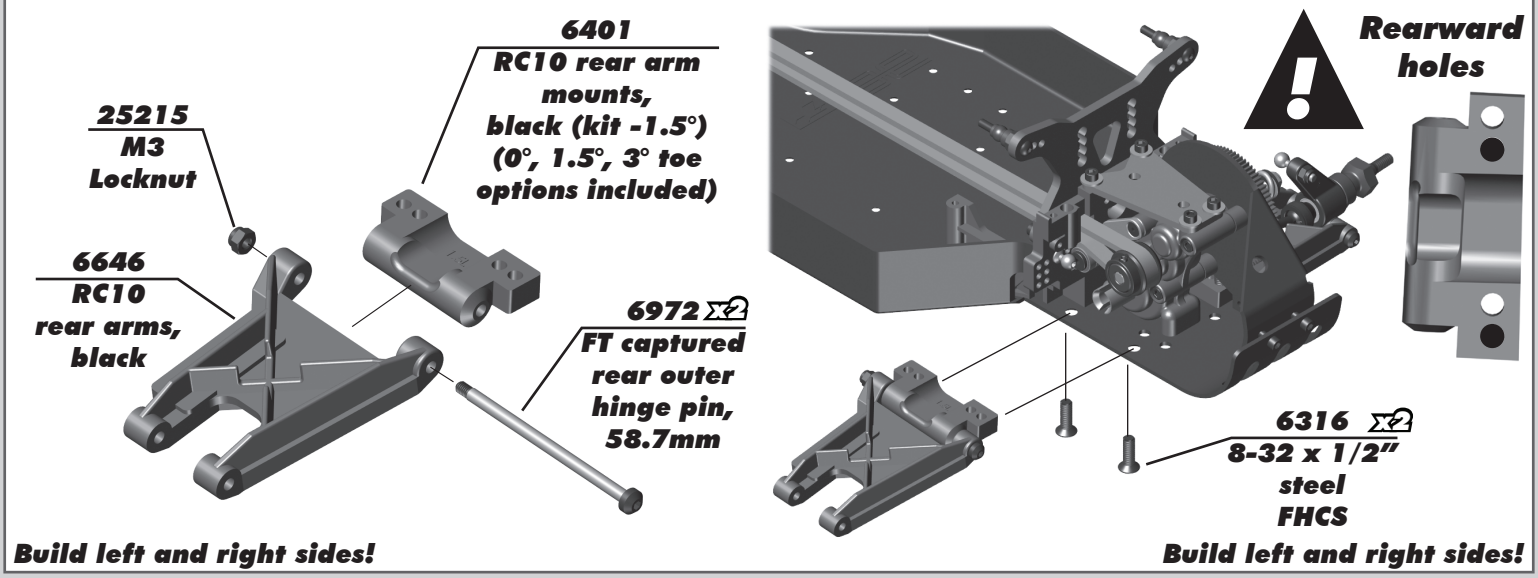


Build left and right sides!

Build left and right sides!

## :: Rear Suspension Build - Bag E - Step 2

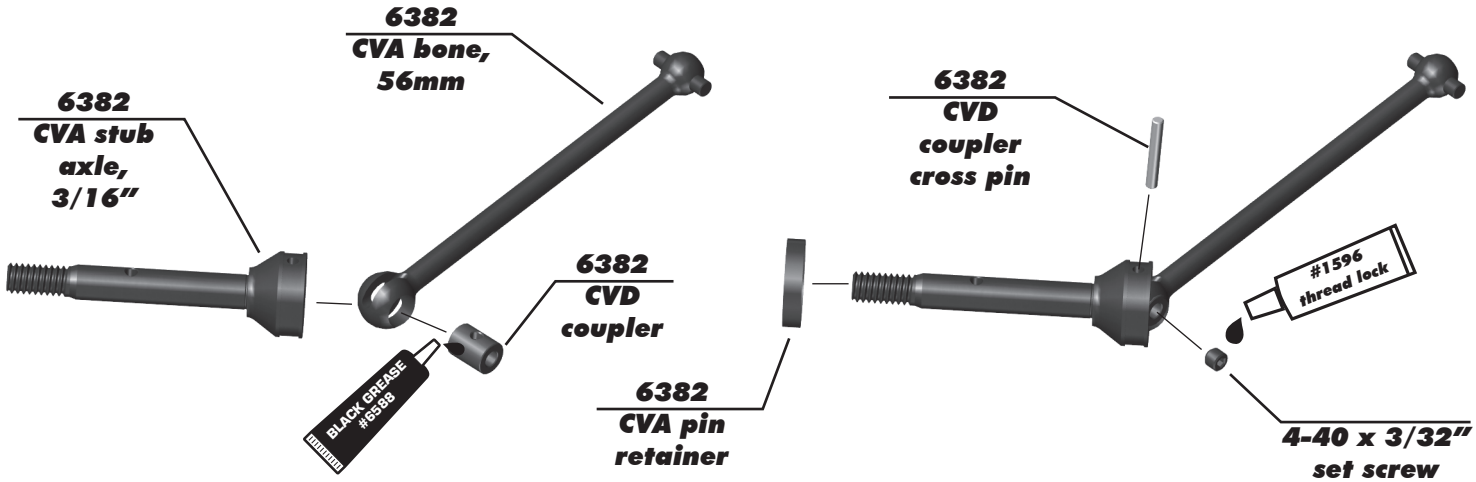


Build x2!

## :: Rear Suspension Build - Bag E - Step 3

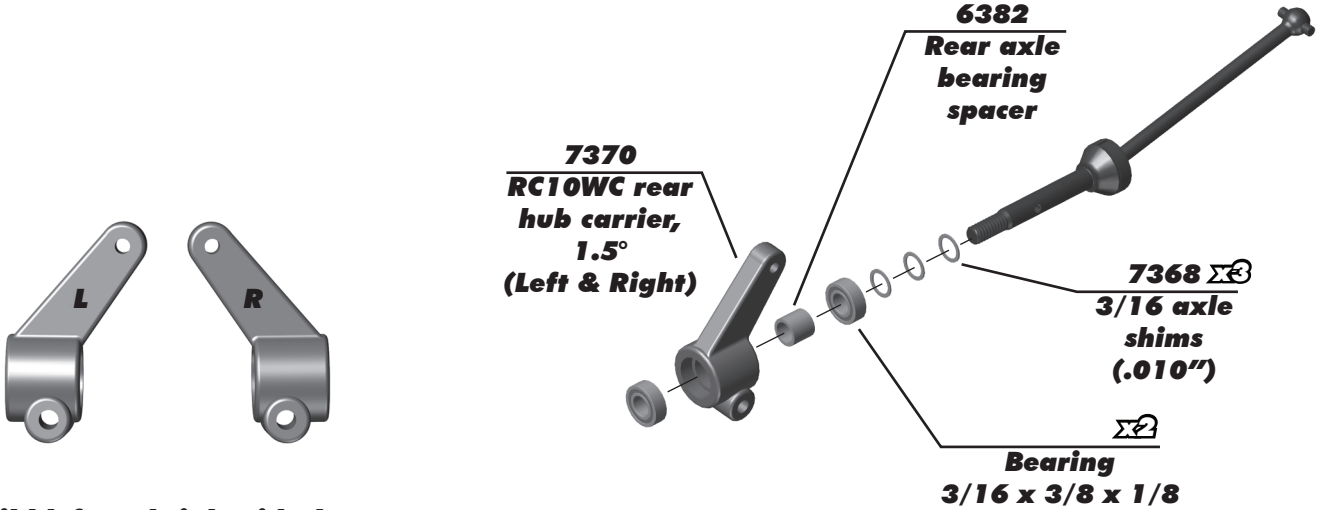


Build left and right sides!

## :: Rear Suspension Build - Bag E - Step 4

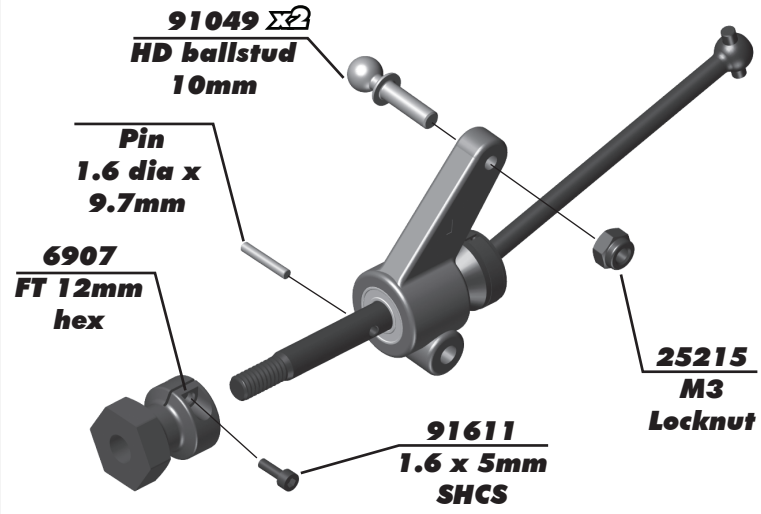


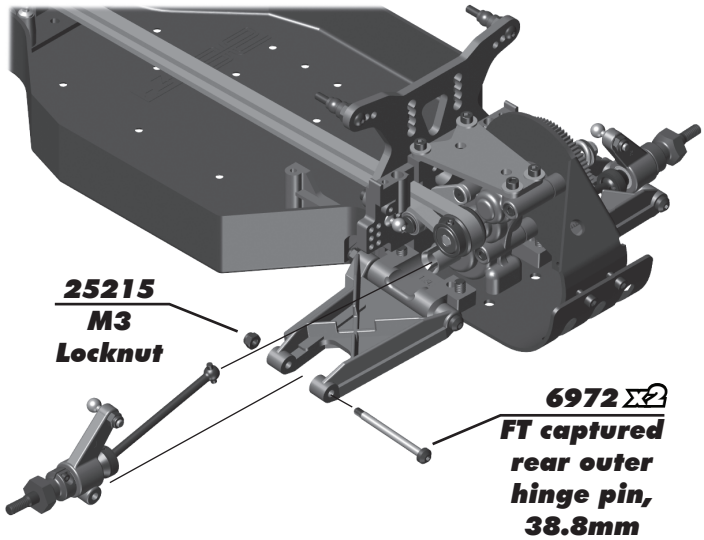


**Build left and right sides!**

## :: Turnbuckle Build - Bag F - Step 1

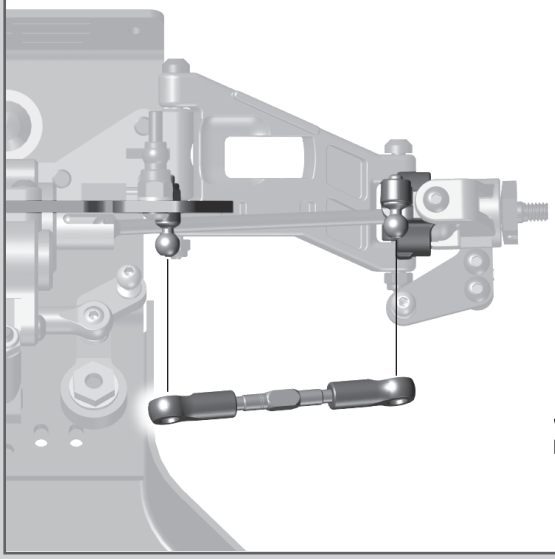



Note the direction of the ball cups!

6547
RC10 4WD
turnbuckle,
3.5mm x 38mm

6535 x2
RC10 4WD
ball cups,
3.5mm

Orient the notch to the left throughout the car. It indicates which end has the left hand threads!



### Front Camber Turnbuckle
### 0.85" (21.50mm)

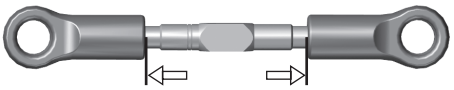

Recommended turnbuckle lengths are approximate. Final recommended settings = 0 degree Front Toe in and -2 Degree Camber Front and Rear.

**Build left and right sides!**

## :: Turnbuckle Build - Bag F - Step 2

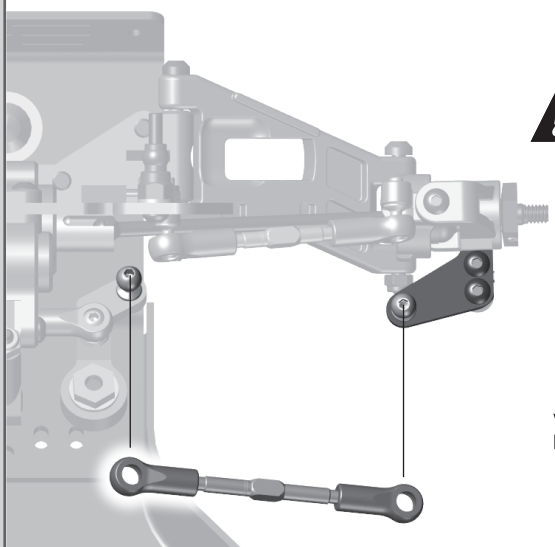



Note the direction of the ball cups!

6547
RC10 4WD
turnbuckle,
3.5mm x 48mm

6535 x2
RC10 4WD
ball cups,
3.5mm

Orient the notch to the left throughout the car. It indicates which end has the left hand threads!



### Steering Turnbuckle
### 1.18" (30.00mm)



Recommended turnbuckle lengths are approximate. Final recommended settings = 0 degree Front Toe in and -2 Degree Camber Front and Rear.

**Build left and right sides!**

## :: Turnbuckle Build - Bag F - Step 3

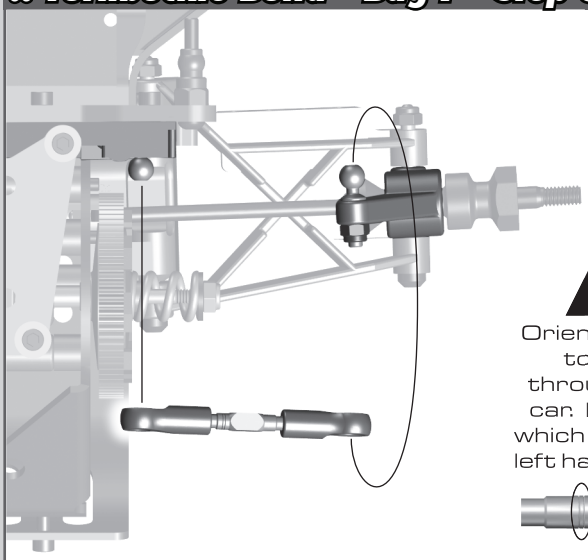



Note the direction of the ball cups!



**6547**
**RC10 4WD turnbuckle, 3.5mm x 33mm**



**6535 x2**
**RC10 4WD ball cups, 3.5mm**

Orient the notch to the left throughout the car. It indicates which end has the left hand threads!



**Rear Camber Turnbuckle 0.59" (15mm)**

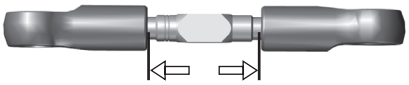

Recommended turnbuckle lengths are approximate. Final recommended settings = 0 degree Front Toe in and -2 Degree Camber Front and Rear.

**Build left and right sides!**

## :: Shocks Build - Bag G - Step 1

**31510**
**M2 x 4mm BHCS**

**91934**
**FT 13mm shock piston 2.5mm (2x1.8) "front"**

**89278**
**2.5mm washer**

**91615**
**V2 3x21mm shock shaft TiN "front"**

**Build x2 front shocks!**

Mount the shock pistons with the number facing up!



Racers Tip:

Use marker to mark over the numbers on the pistons to make them easily visible!

**31510**
**M2 x 4mm BHCS**

**92428**
**FT 13mm shock piston 2.5mm (2x1.9) "rear"**

**89278**
**2.5mm washer**

**91619**
**V2 3x27.5mm shock shaft TiN "rear"**

**Build x2 rear shocks!**

## :: Shocks Build - Bag G - Step 2

**91923**
**FT Fox shock bodies 13x23mm, with Genuine Kashima Coat (front)**

**91996**
**13mm shock cap o-ring**

**91493 x2**
**X-ring**

**91996**
**13mm shock spacer**

**91996 x2**
**13mm shock hat bushing**

**31327**
**VCS3 shock bottom cap**

**Build x2 front shocks!**

Lightly rub shock fluid on the O-ring before installation!



Racers Tip:

Coating the O-rings with green slime (#1105) helps seal & reduce O-ring swell! Green slime is not included in kit!

**91996**
**13mm shock cap o-ring**

**91925**
**FT Fox shock bodies 13x27.5mm, with Genuine Kashima Coat (rear)**

**91493 x2**
**X-ring**

**91996**
**13mm shock spacer**

**91996 x2**
**13mm shock hat bushing**

**Build x2 rear shocks!**

## :: Shocks Build - Bag G - Step 3

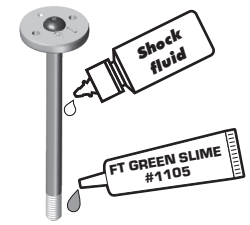


There are 3 lengths of shock eyelet in the kit. Pay attention to length when building as these affect your droop and uptravel.



Lightly rub shock fluid or green slime on threads.




**0mm +2mm +4mm**



**4187 x4**
**Washers, 6x3x1mm, nylon**

**92419**
**Shock eyelets front shocks 0mm**

**6841**
**Shock pivot ball**

**Build x2 front shocks!**

Note:
There are x10 internal limiter washers (#4187) included. Use these on high traction conditions to limit the down travel as needed.



**92419**
**Shock eyelets front shocks +4mm**

**6841**
**Shock pivot ball**

**Build x2 rear shocks!**

## :: Shocks Build - Bag G - Step 4







Front shock: 35wt #5429
Rear shock: 30wt #5422

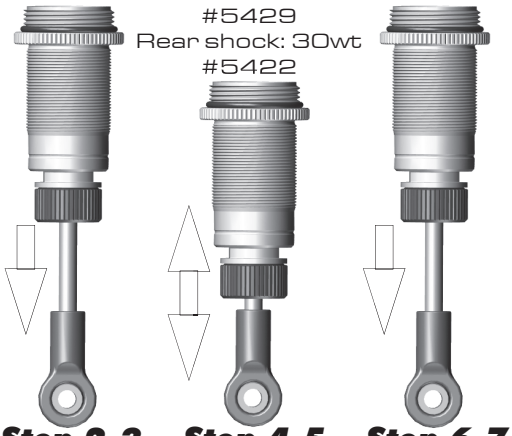

**Step 2-3** **Step 4-5** **Step 6-7**

**91926**
**13mm shock cap**



**Step 8**

Shock Bleeding Steps:

1. Before assembly, get each bleed screw and thread it 1-2 turns into the shock cap, then remove the screw. This will make it easier when you are bleeding your shocks.
2. Pull shock shaft down.
3. Fill shock body 3/4 full with silicone shock fluid.
4. Slowly move the shock shaft up and down to remove air from under the piston.
5. Wait for bubbles to come to surface.
6. Fill shock body to top with silicone shock fluid.
7. Place a drop of oil in the cap and on cap threads.
8. Install cap (without bleed screw) and tighten completely.
9. Slowly compress shaft all the way to bleed excess silicone shock fluid out the hole in the cap (use rag around shock to catch excess fluid).
10. Install button head screw until snug while shaft is fully compressed.

**31510**
**M2x4mm BHCS**

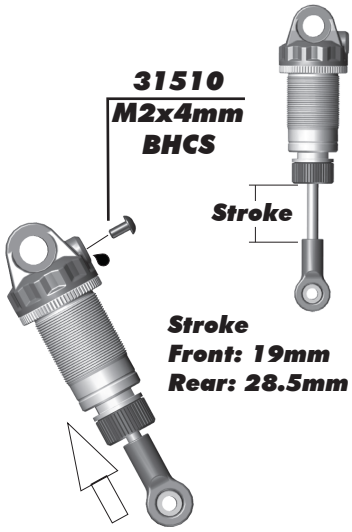


**Stroke**
**Front: 19mm**
**Rear: 28.5mm**

**Step 9-10**

## :: Shocks Build - Bag G - Step 5

**91996 x4**
**13mm threaded collar O-ring**



**91928 x4**
**13mm threaded collar**

**Build x4**



**91942**
**13mm front spring, blue (4.2lb/in)**



Racers Tip:

Use your finger to rub shock fluid on the O-ring for smoother adjustment!



**91950**
**13mm rear spring, blue (2.2lb/in)**

## :: Shocks Build - Bag G - Step 6

#91966 13mm Shock Spring Cups

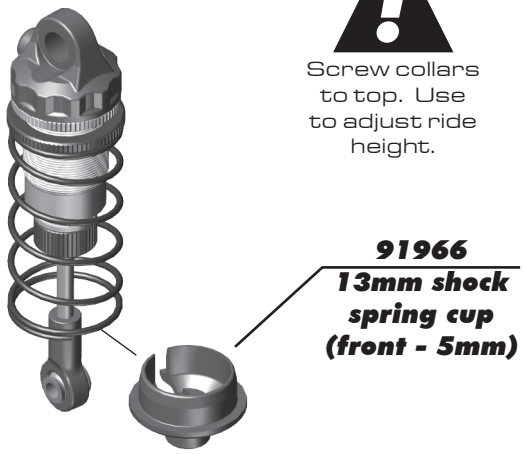

Screw collars to top. Use to adjust ride height.

**91966 13mm shock spring cup (front - 5mm)**

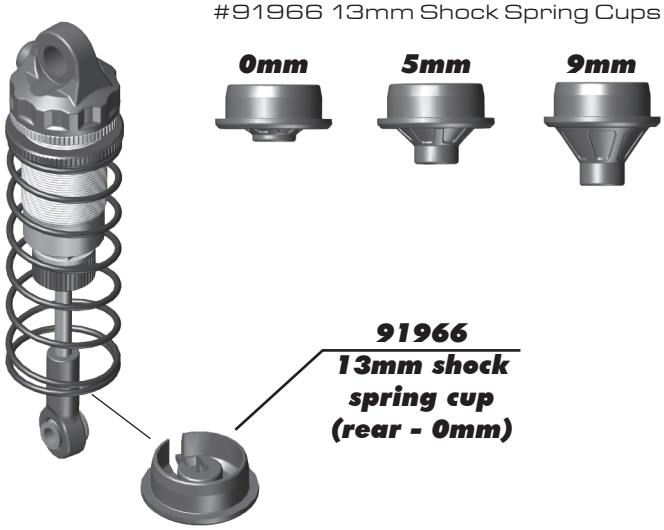


**91966 13mm shock spring cup (rear - 0mm)**

**Build x2 front shocks!**

**Build x2 rear shocks!**

## :: Shocks Build - Bag G - Step 7

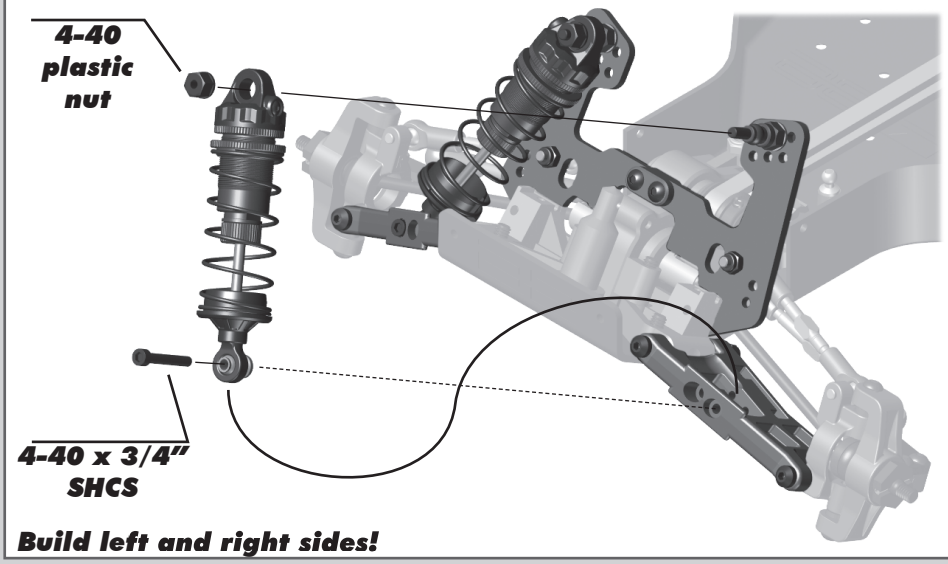


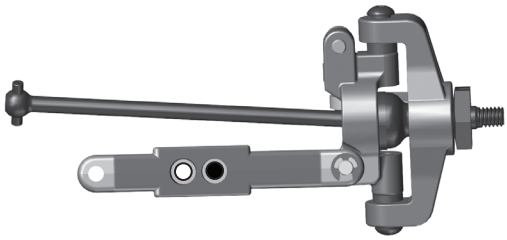

**Build left and right sides!**

## :: Shocks Build - Bag G - Step 8

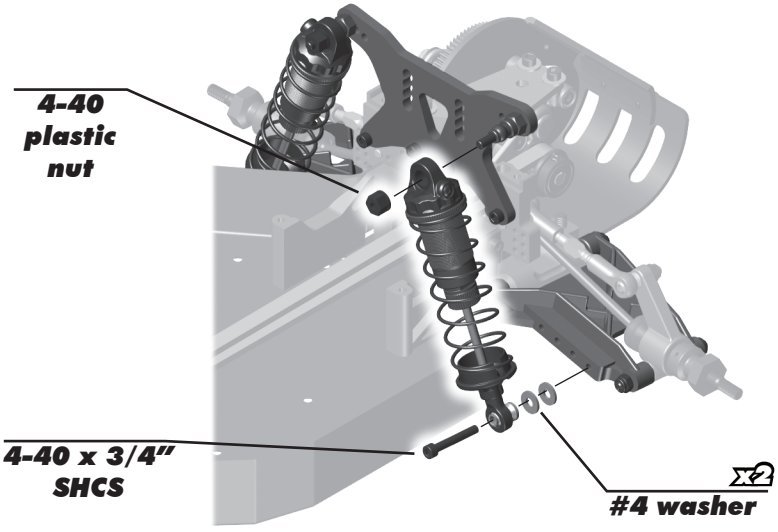


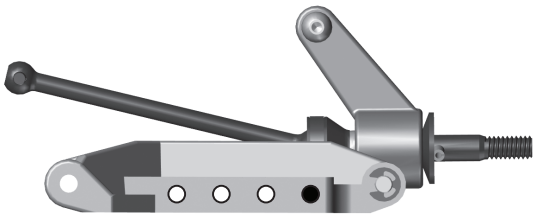

**Build left and right sides!**

## :: Chassis Build - Bag H - Step 1

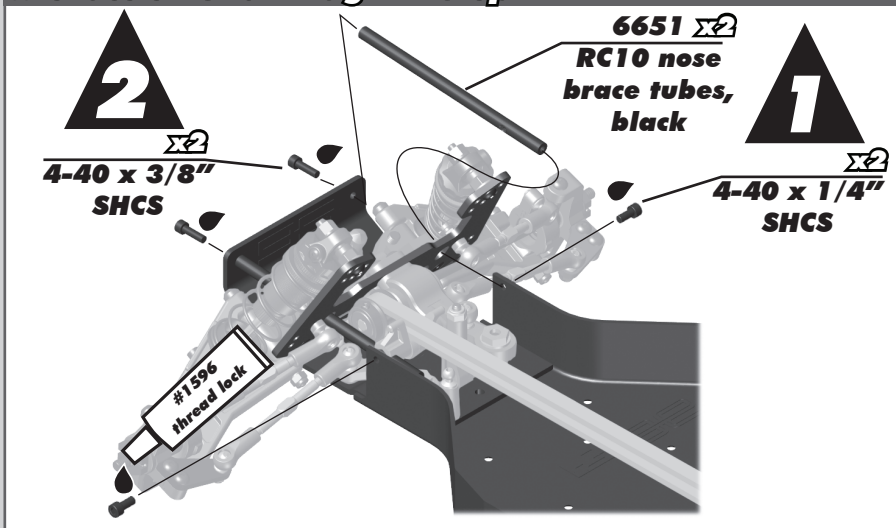


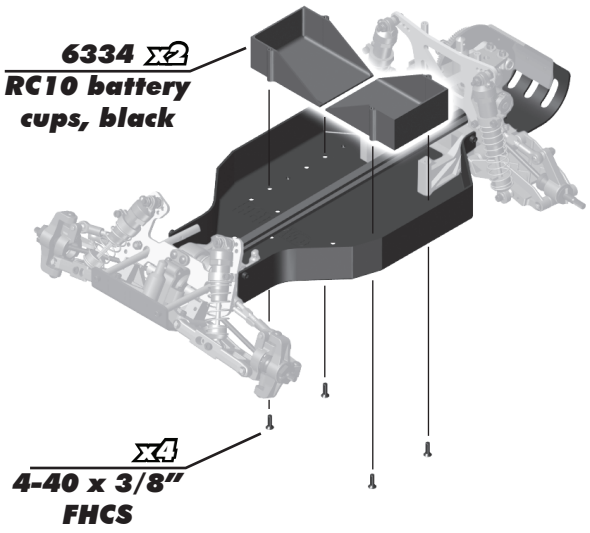


Build left and right sides!

## :: Chassis Build - Bag H - Step 2

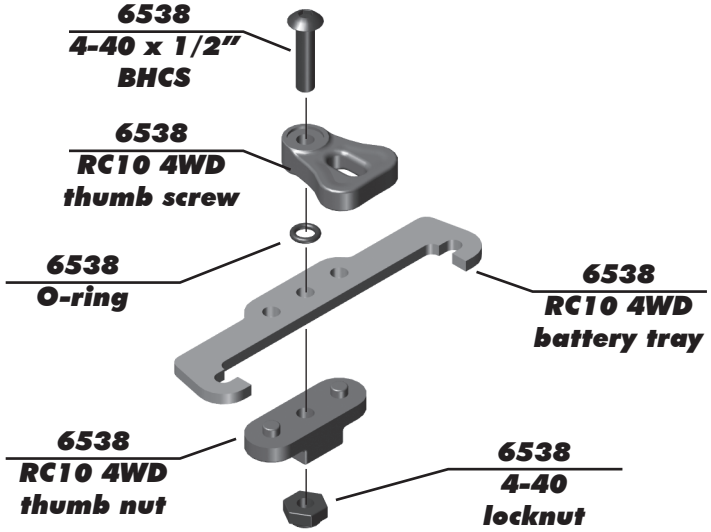


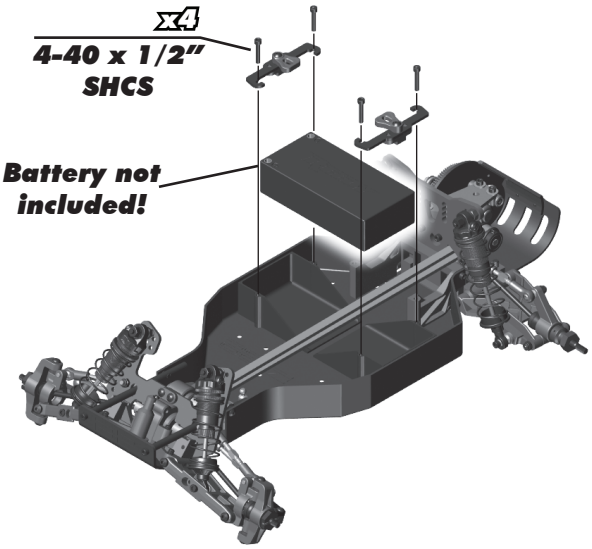


Build x2!

## :: Chassis Build - Bag H - Step 3

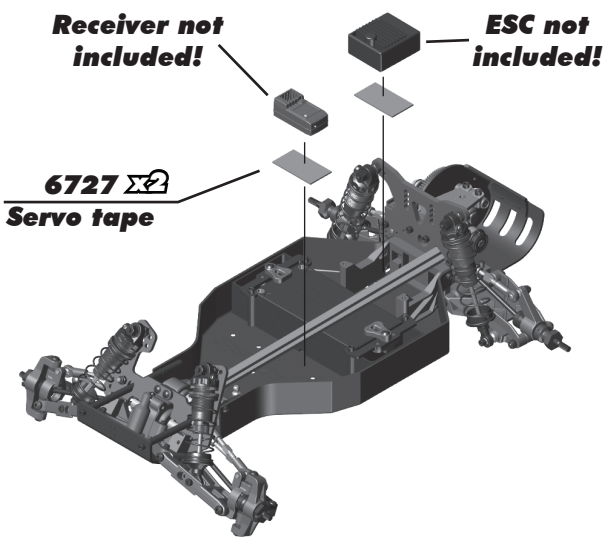


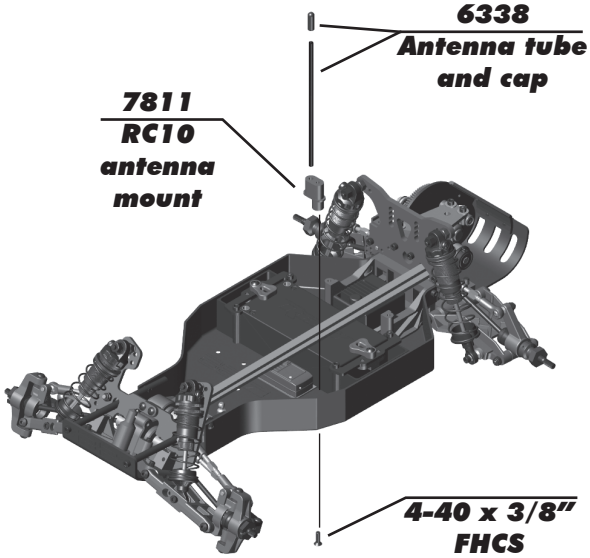

## :: Servo / Chassis Stiffeners Build - Bag I - Step 1

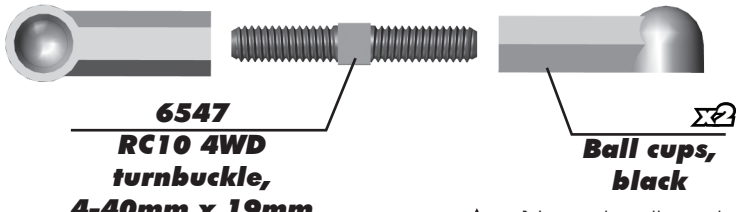

6547
RC10 4WD
turnbuckle,
4-40mm x 19mm

x2
Ball cups,
black

Note the direction of the ball cups!

**Servo Turnbuckle**
**0.19" (5.00mm)**

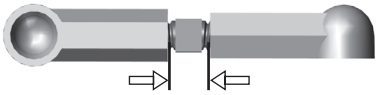

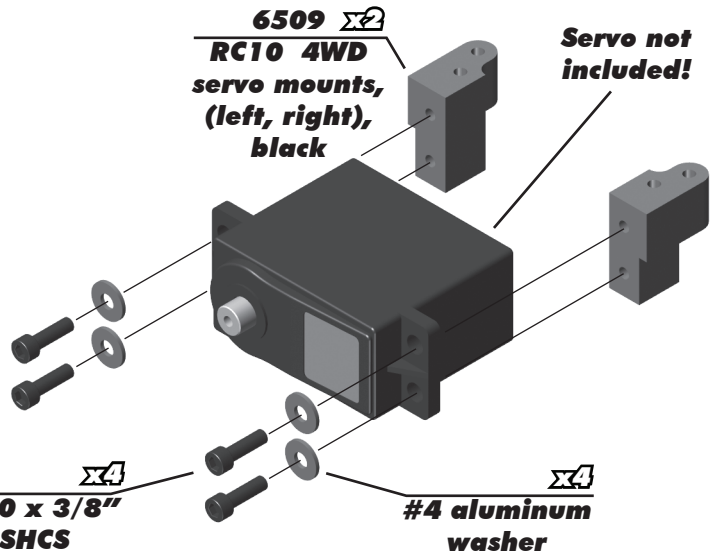

6509 x2
RC10 4WD
servo mounts,
(left, right),
black

Servo not included!

x4
4-40 x 3/8"
SHCS

x4
#4 aluminum
washer

## :: Servo / Chassis Stiffeners Build - Bag I - Step 2

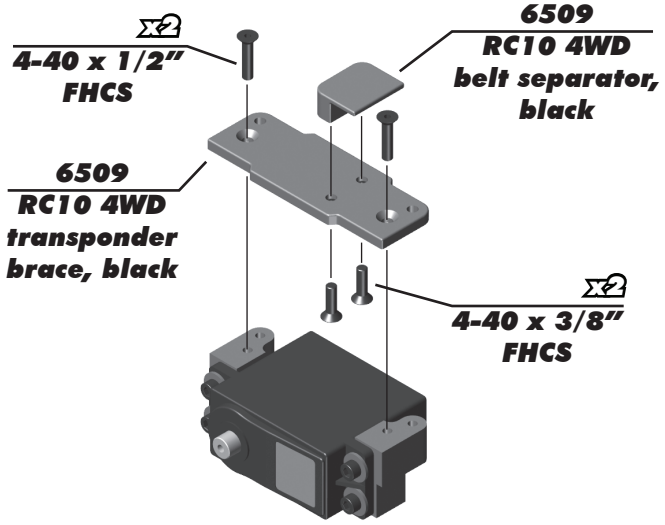

x2
4-40 x 1/2"
FHCS

6509
RC10 4WD
belt separator,
black

6509
RC10 4WD
transponder
brace, black

x2
4-40 x 3/8"
FHCS

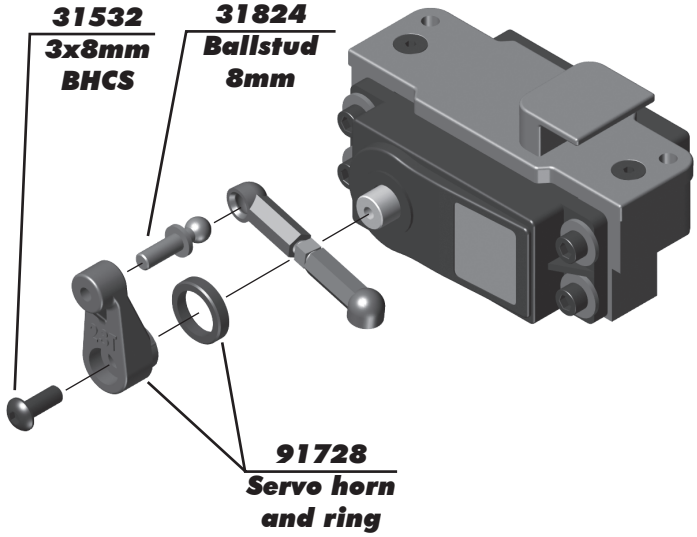

31532
3x8mm
BHCS

31824
Ballstud
8mm

91728
Servo horn
and ring

## :: Servo / Chassis Stiffeners Build - Bag I / F - Step 3

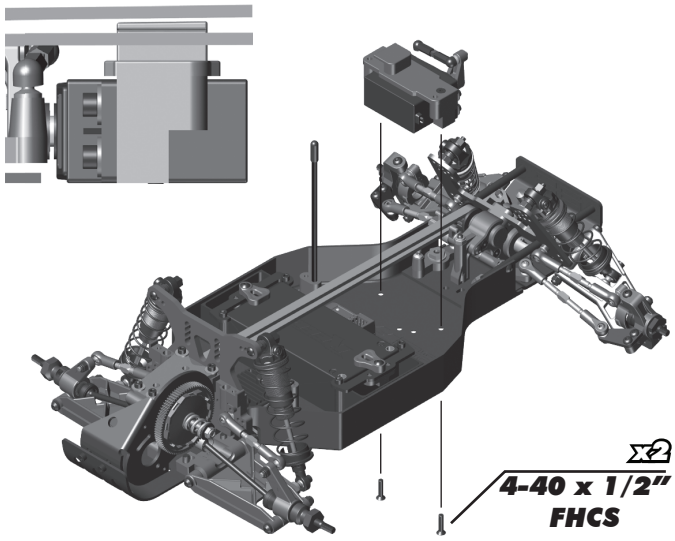

x2
4-40 x 1/2"
FHCS



6535 x2
Rod end

6510
Chassis
brace tube,
black

**Chassis Brace**
**3.42" (87mm)**



## :: Servo / Chassis Stiffeners Build - Bag I - Step 4

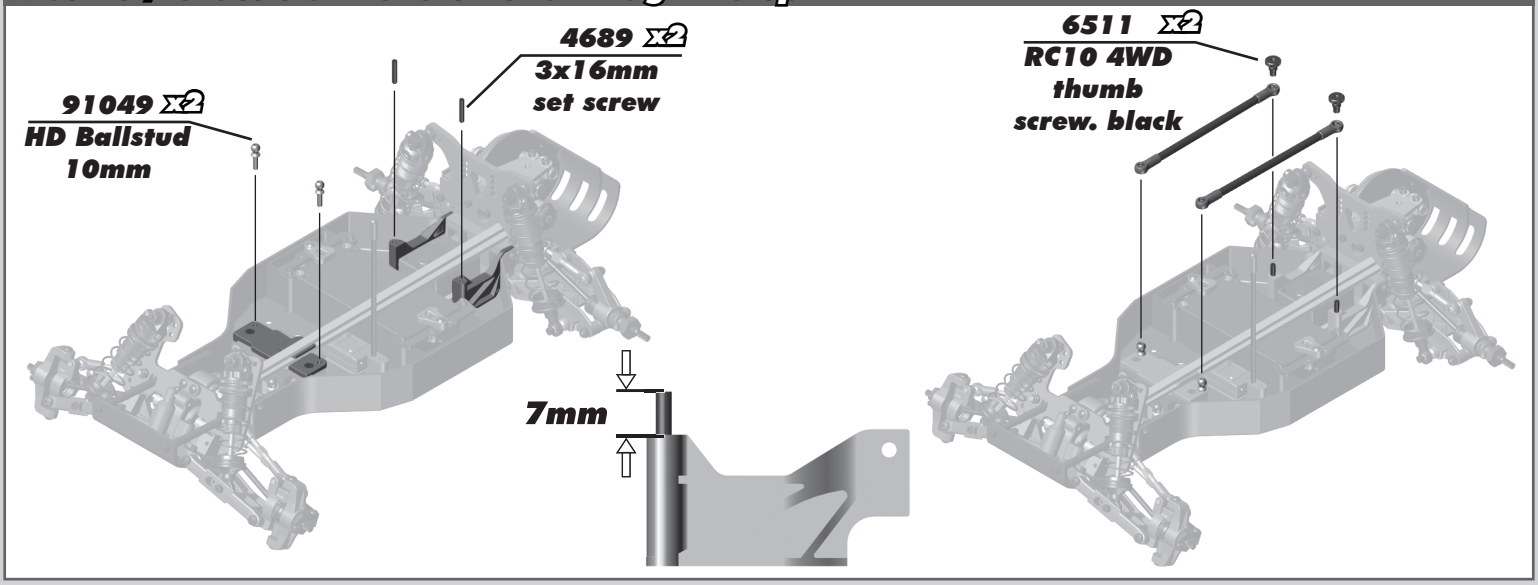


## :: Wheels / Tires and Body - Bag J - Step 1

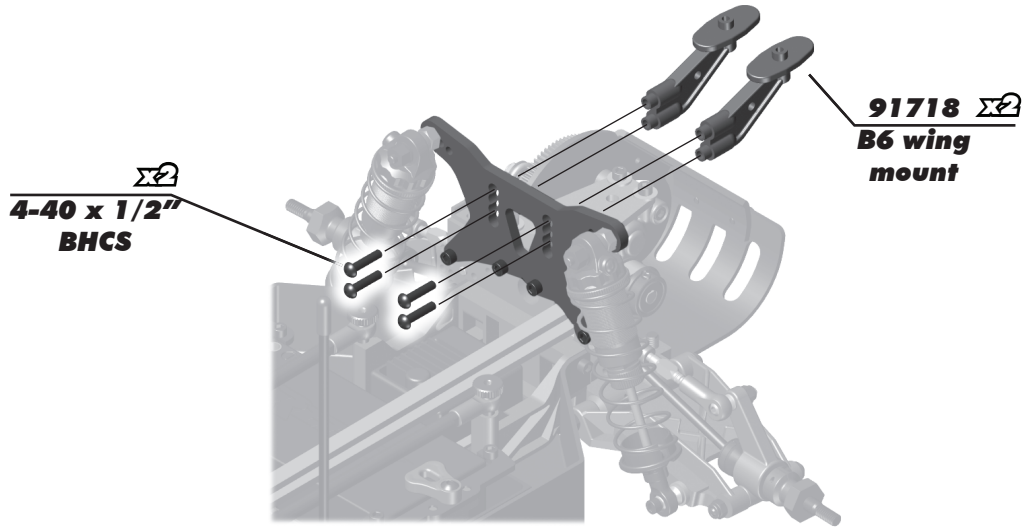


## :: Wheels / Tires and Body - Bag J - Step 2

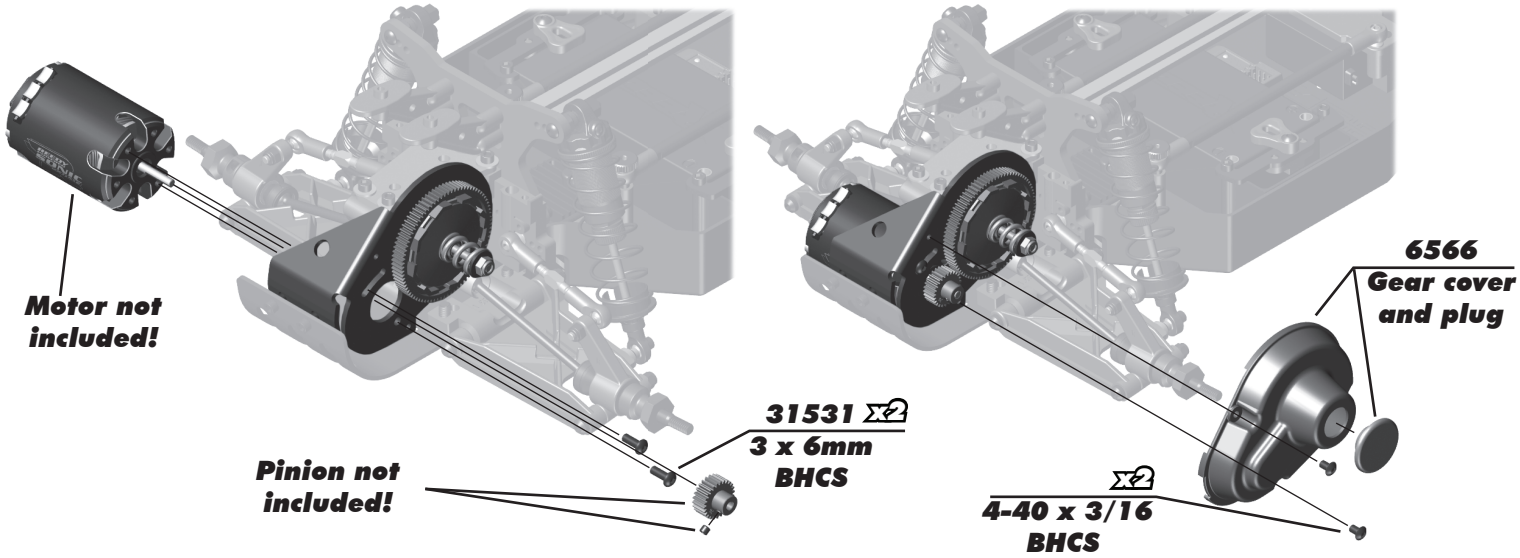

## :: Wheels / Tires and Body - Bag J - Step 3

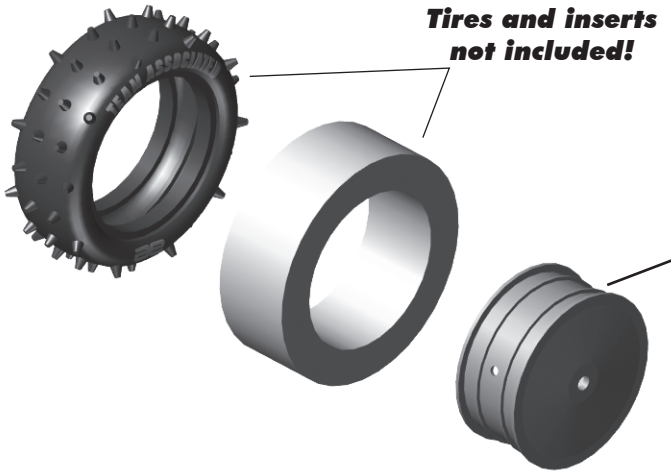


Clean the tire and wheel bead. Carefully apply CA glue (tire adhesive) to the tire bead on both sides. Do one side at a time, allow it to dry before gluing the other side!
**CA glue not included!**

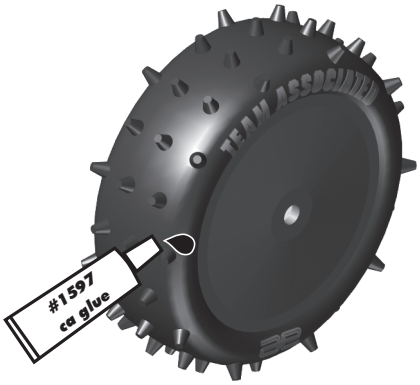


**Build 2**

## :: Wheels / Tires and Body - Bag J - Step 4

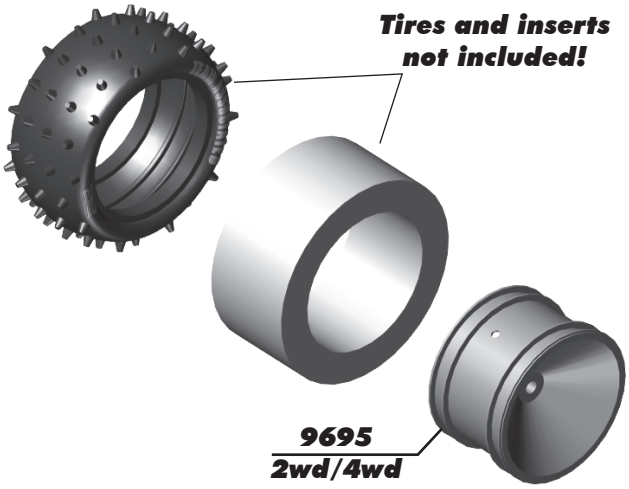


Clean the tire and wheel bead. Carefully apply CA glue (tire adhesive) to the tire bead on both sides. Do one side at a time, allow it to dry before gluing the other side!
**CA glue not included!**

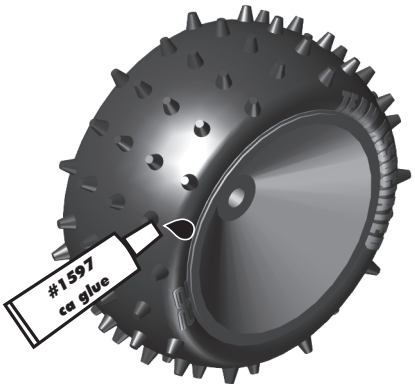


**Build 2**

## :: Wheels / Tires and Body - Bag J - Step 5

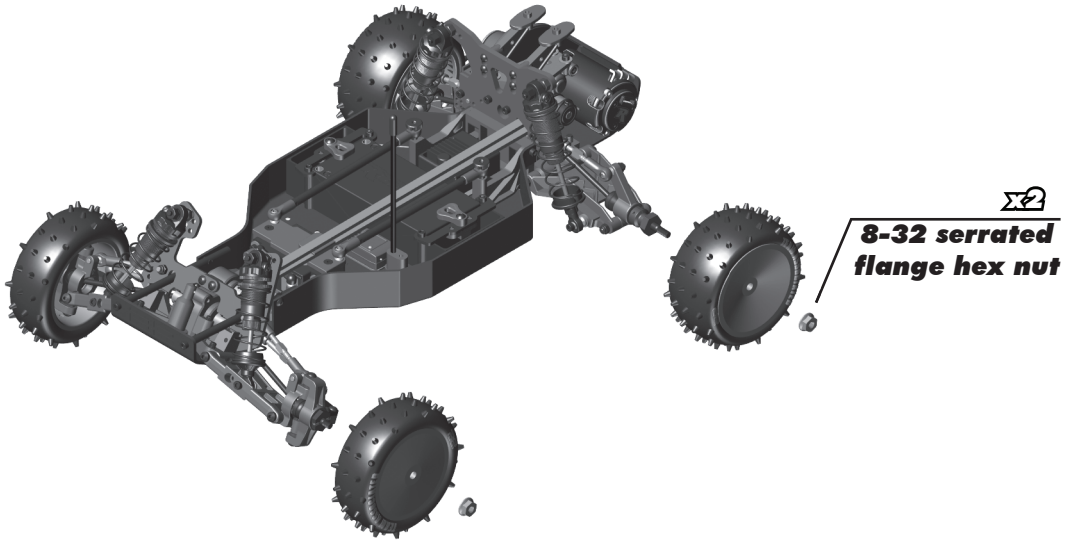

## :: Wheels / Tires and Body - Bag J - Step 6

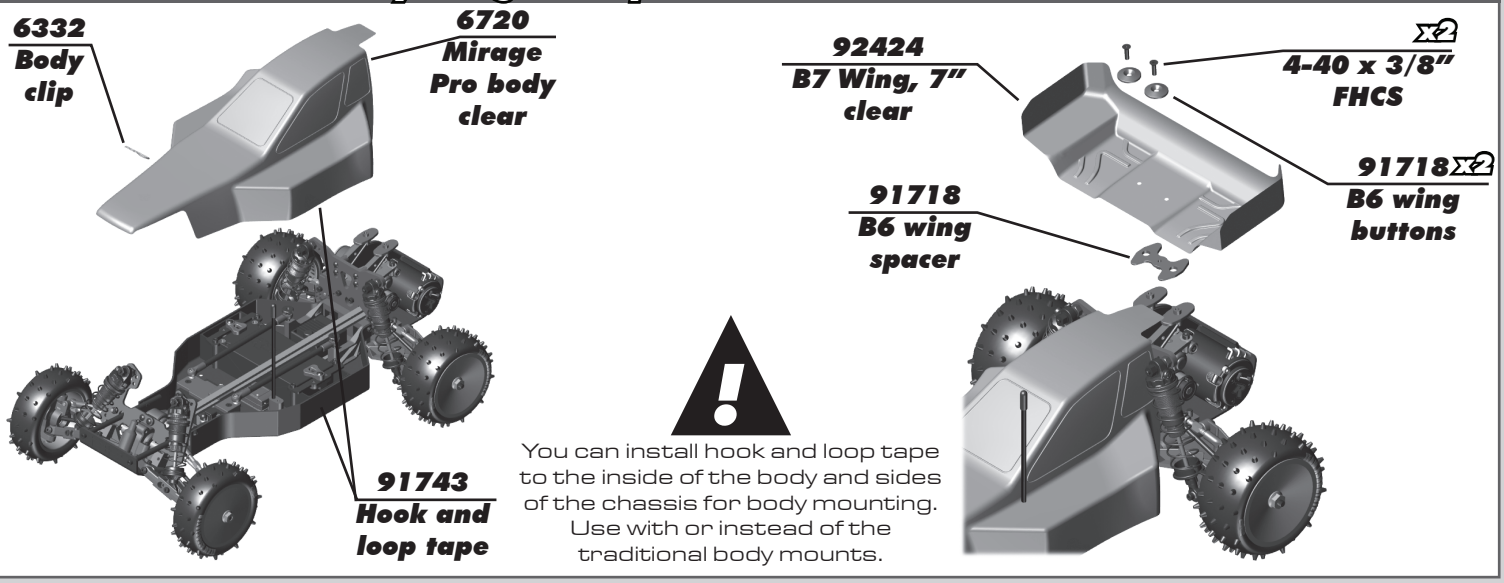


You can install hook and loop tape to the inside of the body and sides of the chassis for body mounting. Use with or instead of the traditional body mounts.

## :: Notes

### Painting Tips:

Your Kit comes with a clear polycarbonate body and wing. You will need to prep the body and wing before you can paint them. Wash the inside thoroughly with warm water and liquid detergent. Dry the body and wing using a clean, soft, lint-free cloth. Use high quality masking tape to make masks for the windows and install them on the inside of the body (RC cars get painted from the inside).
Using high quality masking tape, apply tape to the inside of the body to create a design. Spray (either rattle can or airbrush R/C specific paint) the paint to the inside of the body (prefferably dark colors first, lighter colors last).

NOTE: use ONLY paint that is recommended for use with (polycarbonate) plastics. If you do not, you can destroy the plastic body and wing!!!!).
It is recommended to wear a mask while painting.

After the paint has dried, cut the body and wing along the trim lines. Make sure to drill or use a body reamer to make the holes for the body mounts, wing mounts, and antenna!

TEAM ASSOCIATED

# RC10 4WD SETUP SHEET

**Driver:** Andrew Smolnik (3rd Place) **Date:** October 19, 2025

**Track:** New Orleans Arena, Las Vegas **Event:** AE Vintage Champs

**Conditions:** **Indoor** ■ **Outdoor** □ **Temp.** _____ **Rev.1**

## Shock Towers

**Front Shock Tower:**

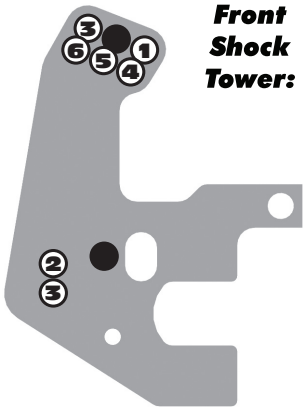


**Rear Shock Tower:**

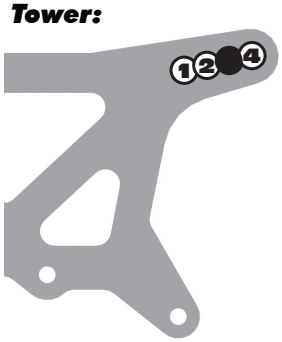


## Ride Height / Wheelbase

**Front Ride Height:** 19mm

**Rear Ride Height:** 21mm

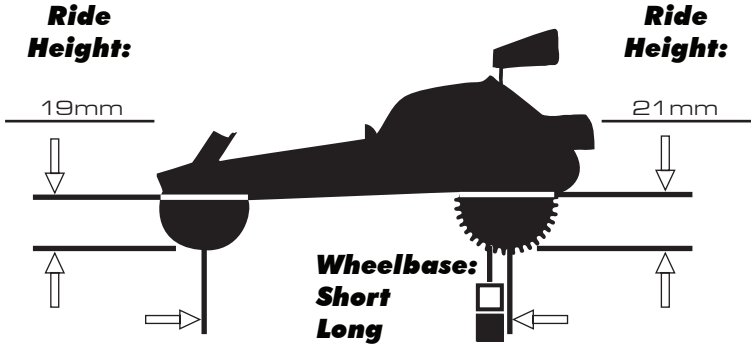

**Wheelbase:** **Short** □ **Long** ■

## Front Suspension

**Camber:** -1 degree

**Toe:** -1 degree

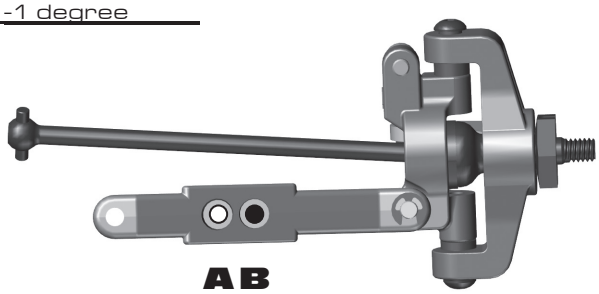


## Rear Suspension

**Camber:** -3 degree

**Toe:** 3 degree

**Rear Hub Carriers:** **0°** ■ **1.5°** □

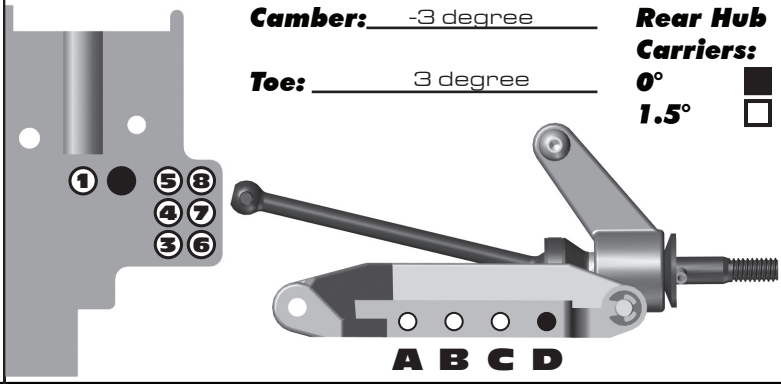


## Front Shocks

**Spring:** Blue, 3.6lb #91942 **Piston:** 1.8mm x2 flat

**Shock Oil:** 32wt **Limiter:** 3 int.

**Shock End:** +0 Short **Stroke:** 20mm

## Rear Shocks

**Spring:** Red, 2.4lb #91957 **Piston:** 1.9mm x2 flat

**Shock Oil:** 27wt **Limiter:** 0

**Shock End:** +2mm **Stroke:** 28mm

## Motor / Battery

**Motor & Wind:** Reedy Sonic SP5 13.5 #27489

**Pinion:** 24T **Spur Gear:** 81T

**Battery:** Reedy Zapper ULP 6200mAh 140c #27616

**Notes:** Long pack, inline

## Radio / ESC Settings

**Radio:**

**Throttle / Brake e.p.a:**

**Throttle / Brake expo:**

**Servo:** **Steering Expo:**

**ESC:**

**ESC Settings:**

## Weight

**Battery Placement:**

**Ballast Weight:**

**Notes:**

## Other

**Body Type:**

**Wing Type:**

## Front Tires

**Tire:**

**Compound:**

**Insert:** **Wheel:**

## Rear Tires

**Tire:**

**Compound:**

**Insert:** **Wheel:**

## Race and Vehicle Comments

**Qualify:** **Main:** **Finish:** **TQ:**

**Comments:** Added four #8 washers under front rear arm mounts to reduce front kickup

## Track Info

| Surface: | | Traction: | | Conditions: | | Moisture: | |
|---|---|---|---|---|---|---|---|
| Dirt | ■ | Low | □ | Grooved | ■ | Wet | □ |
| Carpet | □ | Med | ■ | Dusty | ■ | Damp | □ |
| Astro | □ | High | □ | Smooth | □ | Dry | ■ |
| Multi | □ | | | Bumpy | ■ | | |
| | | | | Hard Pack | □ | | |
| | | | | Loamy | □ | | |

TEAM ASSOCIATED

# RC10 4WD SETUP SHEET

**Driver:** _____ **Date:** _____

**Track:** _____ **Event:** _____

**Conditions:** **Indoor** ☐ **Outdoor** ☐ **Temp.** _____ **Rev.1**

## Shock Towers

**Front Shock Tower:**

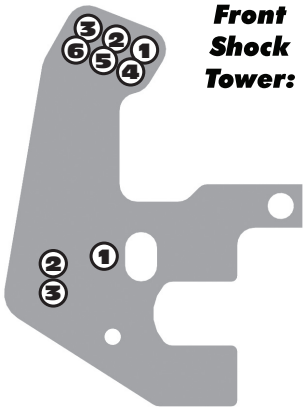


**Rear Shock Tower:**




## Ride Height / Wheelbase

**Front Ride Height:**

**Rear Ride Height:**

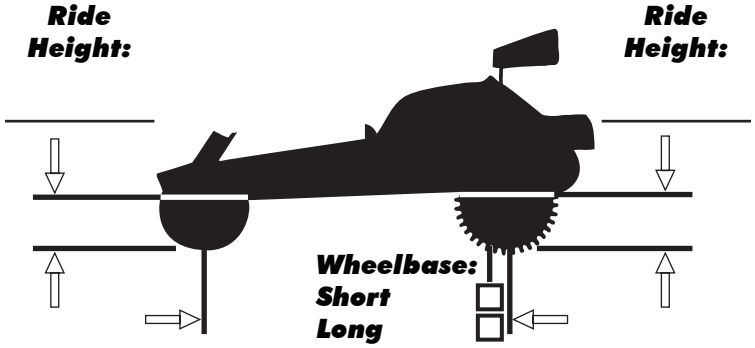

**Wheelbase:**
**Short** ☐
**Long** ☐

## Front Suspension

**Camber:** _____

**Toe:** _____

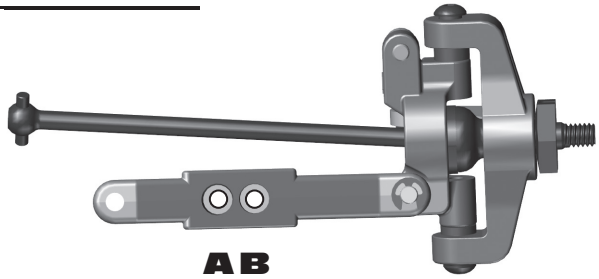


## Rear Suspension

**Camber:** _____

**Toe:** _____

**Rear Hub Carriers:**
**0°** ☐
**1.5°** ☐

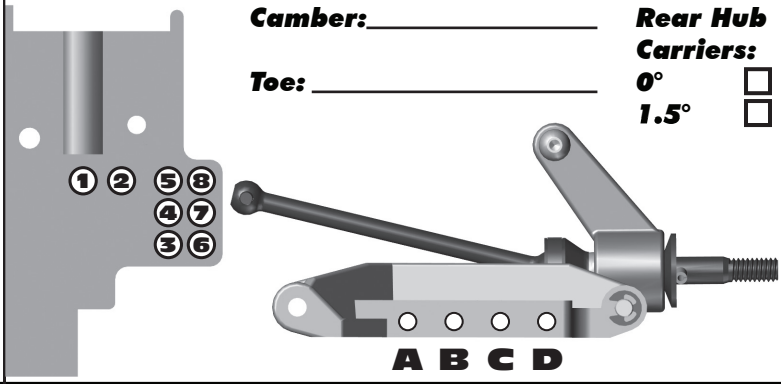


## Front Shocks

**Spring:** _____ **Piston:** _____
**Shock Oil:** _____ **Limiter:** _____
**Shock End:** _____ **Stroke:** _____

## Rear Shocks

**Spring:** _____ **Piston:** _____
**Shock Oil:** _____ **Limiter:** _____
**Shock End:** _____ **Stroke:** _____

## Motor / Battery

**Motor & Wind:** _____
**Pinion:** _____ **Spur Gear:** _____
**Battery:** _____
**Notes:** _____

## Radio / ESC Settings

**Radio:** _____
**Throttle / Brake e.p.a:** _____
**Throttle / Brake expo:** _____
**Servo:** _____ **Steering Expo:** _____
**ESC:** _____
**ESC Settings:** _____

## Weight

**Battery Placement:** _____
**Ballast Weight:** _____
**Notes:** _____

## Other

**Body Type:** _____
**Wing Type:** _____

## Front Tires

**Tire:** _____
**Compound:** _____
**Insert:** _____ **Wheel:** _____

## Rear Tires

**Tire:** _____
**Compound:** _____
**Insert:** _____ **Wheel:** _____

## Race and Vehicle Comments

**Qualify:** _____ **Main:** _____ **Finish:** _____ **TQ:** _____

**Comments:** _____

## Track Info

| Surface: | | Traction: | | Conditions: | | Moisture: | |
|---|---|---|---|---|---|---|---|
| Dirt | ☐ | Low | ☐ | Grooved | ☐ | Wet | ☐ |
| Carpet | ☐ | Med | ☐ | Dusty | ☐ | Damp | ☐ |
| Astro | ☐ | High | ☐ | Smooth | ☐ | Dry | ☐ |
| Multi | ☐ | | | Bumpy | ☐ | | |
| | | | | Hard Pack | ☐ | | |
| | | | | Loamy | ☐ | | |

:: For more setups, visit RC10.com and click on "Setup Sheets"

ASSOCIATED ELECTRICS
Since 1964


**Associated Electrics, Inc.**
**21062 Bake Parkway Lake Forest, CA 92630 USA**

**call: (949) 544-7500 - fax: (949) 544-7501**


***Check out the following web sites for all of our kits, current products, new releases, setup help, tips, and racing info!***

**www.AssociatedElectrics.com**

FOLLOW US ON SOCIAL MEDIA

| | | | | | |
|---|---|---|---|---|---|
| TeamAssociated<br>ReedyPower<br>ElementRC<br>FactoryTeam51 | @TeamAssociatedRC<br>@ReedyPower<br>@Element_RC<br>@FactoryTeam_RC | @Team_Associated<br>@ReedyPower | @Associated_Electrics | TeamAssociatedRC<br>ElementRC | TeamAssociated<br>Reedy<br>Element-rc |