WWW.AXIALADVENTURE.COM

READY-TO-RUN

SCX30 JEEP CJ-7 4X4

1/30th SCALE ROCK CRAWLER



INSTRUCTION MANUAL
BEDIENUNGSANLEITUNG
MANUEL D'UTILISATION
MANUALE DI ISTRUZIONI

Scan the QR code and select the Support tab from the product page for the most up-to-date manual information.
Scannen Sie den QR-Code und wählen Sie auf der Produktseite die Registerkarte „Support", um die aktuellsten Informationen zu Handbücher.
Scannez le code QR et sélectionnez l'onglet Support sur la page du produit pour obtenir les informations les plus récentes sur le manuel.
Scannerizzare il codice QR e selezionare la scheda Supporto dalla pagina del prodotto per le informazioni manuali più aggiornate.

RTR READY-TO-RUN

AXI-3273

1291072.1
Updated 9/26

HORIZON HOBBY

NOTICE

All instructions, warranties and other collateral documents are subject to change at the sole discretion of Horizon Hobby, LLC. For up-to-date product literature, visit horizonhobby.com or towerhobbies.com and click on the support or resources tab for this product.

MEANING OF SPECIAL LANGUAGE

The following terms are used throughout the product literature to indicate various levels of potential harm when operating this product:

WARNING: Procedures, which if not properly followed, create the probability of property damage, collateral damage, and serious injury OR create a high probability of superficial injury.
CAUTION: Procedures, which if not properly followed, create the probability of physical property damage AND a possibility of serious injury.
NOTICE: Procedures, which if not properly followed, create a possibility of physical property damage AND a little or no possibility of injury.

WARNING: Read the ENTIRE instruction manual to become familiar with the features of the product before operating. Failure to operate the product correctly can result in damage to the product, personal property and cause serious injury.
This is a sophisticated hobby product. It must be operated with caution and common sense and requires some basic mechanical ability. Failure to operate this Product in a safe and responsible manner could result in injury or damage to the product or other property. This product is not intended for use by children without direct adult supervision. Do not use with incompatible components or alter this product in any way outside of the instructions provided by Horizon Hobby, LLC. This manual contains instructions for safety, operation and maintenance. It is essential to read and follow all the instructions and warnings in the manual, prior to assembly, setup or use, in order to operate correctly and avoid damage or serious injury.

Age Recommendation: Not for children under 14 years. This is not a toy.

SAFETY PRECAUTIONS AND WARNINGS

As the user of this product, you are solely responsible for operating in a manner that does not endanger yourself and others or result in damage to the product or property of others.
This model is controlled by a radio signal subject to interference from many sources outside your control. This interference can cause momentary loss of control, so it is advisable to always keep a safe distance in all directions around your model as this margin will help avoid collisions or injury.

- Never operate your model with low transmitter batteries.
- Always operate your model in open spaces away from full-size vehicles, traffic and people.
- Never operate the model in the street or in populated areas for any reason.
- Carefully follow the directions and warnings for this and any optional support equipment (chargers, rechargeable battery packs, etc.) you use.
- Keep all chemicals, small parts and anything electrical out of the reach of children.
- Never lick or place any portion of the model in your mouth as it could cause serious injury or even death.
- Exercise caution when using tools and sharp instruments.
- Take care during maintenance as some parts may have sharp edges.
- Immediately after using your model, do NOT touch equipment such as the motor, electronic speed control and battery, because they generate high temperatures. You may burn yourself seriously touching them.
- Do not put fingers or any objects inside rotating and moving parts, as this may cause damage or serious injury.
- Always turn on your transmitter before you turn on the receiver in the car. Always turn off the receiver before turning your transmitter off.
- Keep the wheels of the model off the ground when checking the operation of the radio equipment.

TABLE OF CONTENTS

Safety Precautions and Warnings 2
Box Contents 3
USB Charging Warnings 3
Charge the Vehicle Battery 4
Transmitter Layout 5
Install the Transmitter Batteries 6
Remove the Vehicle Body 6
Install the Vehicle Battery 7
Power on the Transmitter 7
Install the Body 8
Power on the Vehicle 8
Test the Controls 8
Steering Trim 9
After Driving 9
Binding the Transmitter and Receiver 9
Button Functions 10
Receiver and ESC Wiring Diagram 11
Replacement Parts 12
Optional Parts 12
Troubleshooting 13
Limited Warranty 13
Warranty and Service Contact Information 14
FCC Information 15
IC Information 15
Compliance Information for the European Union 16
Exploded Views 60–66

BOX CONTENTS

INCLUDED COMPONENTS	
Vehicle	Axial® SCX30 1/30 Scale 4X4 Rock Crawler RTR
Transmitter	SLT2 2-CH 2.4GHz (SPMRSLT270)
Charger	USB 2S Charger: 0.5A JST-XH 3P
Vehicle Battery	Spektrum™ 7.4V 160mAh 2S LiPo: PH 2.0 (SPMX-1122)
Motor	88T 030-Size Brushed Motor (AXI-3285)
ESC/Receiver	Spektrum™ SCX30 SLT Brushed 2-in-1 ESC / Receiver Combo (SPMXSE3225RX)
Servo	SX112 Servo: SCX30 (SPMSSX112)
Transmitter Batteries	(4) AA Alkaline

USB CHARGING WARNINGS

WARNING: Failure to exercise caution while using this product and comply with the following warnings could result in product malfunction, electrical issues, excessive heat, FIRE, and ultimately injury and property damage.

- **NEVER LEAVE CHARGING BATTERIES UNATTENDED.**
- **NEVER CHARGE BATTERIES OVERNIGHT.**
- Never attempt to charge dead, damaged or wet battery packs.
- Never attempt to charge a battery pack containing different types of batteries.
- Never allow children under 14 years of age to charge battery packs.
- Never charge batteries in extremely hot or cold places or place in direct sunlight.
- Never charge a battery if the cable has been pinched or shorted.
- Never connect the charger if the power cable has been pinched or shorted.
- Never attempt to dismantle the charger or use a damaged charger.
- Always use only rechargeable batteries designed for use with this type of charger.
- Always inspect the battery before charging.
- Always keep the battery away from any material that could be affected by heat.
- Always monitor the charging area and have a fire extinguisher available at all times.
- Always end the charging process if the battery becomes hot to the touch or starts to change form (swell) during the charge process.
- Always connect the positive leads (+) and negative leads (–) correctly.
- Always disconnect the battery after charging, and let the charger cool between charges.
- Always charge in a well-ventilated area.
- Always terminate all processes and contact Horizon Hobby if the product malfunctions.
- Charge only rechargeable batteries. Charging non-rechargeable batteries may cause the batteries to burst, resulting in injury to persons and/or damage to property.
- The USB outlet shall be installed near the equipment and shall be easily accessible.

CAUTION: Always ensure the battery you are charging meets the specifications of this charger. Not doing so can result in excessive heat and other related product malfunctions, which can lead to user injury or property damage. Please contact Horizon Hobby or an authorized retailer with compatibility questions.

CAUTION: If at any time during the charge process the battery pack becomes hot or begins to puff, disconnect the battery immediately and discontinue the charge process as batteries can cause fire, collateral damage and injuries.

CHARGE THE VEHICLE BATTERY

Refer to the charging warnings before attempting to charge the battery. Your vehicle comes with a 2S 7.4V USB LiPo battery charger and 2S 7.4V 160mAh LiPo battery.

CHARGER SPECIFICATIONS	
Input Voltage	5V
Input Current	1A
Output Charging Current	0.5A

1. Insert the charger into a computer USB port or a USB power supply, such as those used to charge cellular phones.
   Always confirm the output voltage of your USB power supply conforms to the charger specifications above before attempting to connect the charger.
2. Connect the battery balance connector to the charge port of the battery charger.

LED INDICATIONS

When you make the connection successfully, the LEDs on the charger glows solid red and blinking green, indicating charging has begun.

Charging a fully discharged (not over-discharged) 160mAh battery takes approximately 20–40 minutes. The LED glows solid green when the charge is complete.

COLOR	FUNCTION
Red Solid and Green Blinking LED	Charging
Red and Green Solid LED	Charging Complete
Red Solid LED	Power Connected (Stand By)
Red Blinking LED Only	Battery Error
Red and Green Blinking LED	Charger Error
Red Blinking and Green Solid LED	Input (V) too high

⚠ **CAUTION:** Once charging is complete, immediately remove the battery. Never leave a battery connected to the charger.

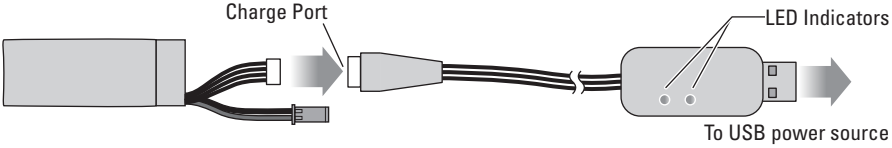

TRANSMITTER LAYOUT

Use the diagram below to familiarize yourself with the different parts of your transmitter.

The transmitter antenna is mounted internally and is located in the front portion of the transmitter. When you are driving your model, hold the transmitter so it is oriented as close to vertical as possible. Do not try to follow your model with the transmitter. This provides the best RF signal between the transmitter and the receiver. Do not cover the front of the transmitter during use as doing so can block the RF signal, resulting in loss of control.

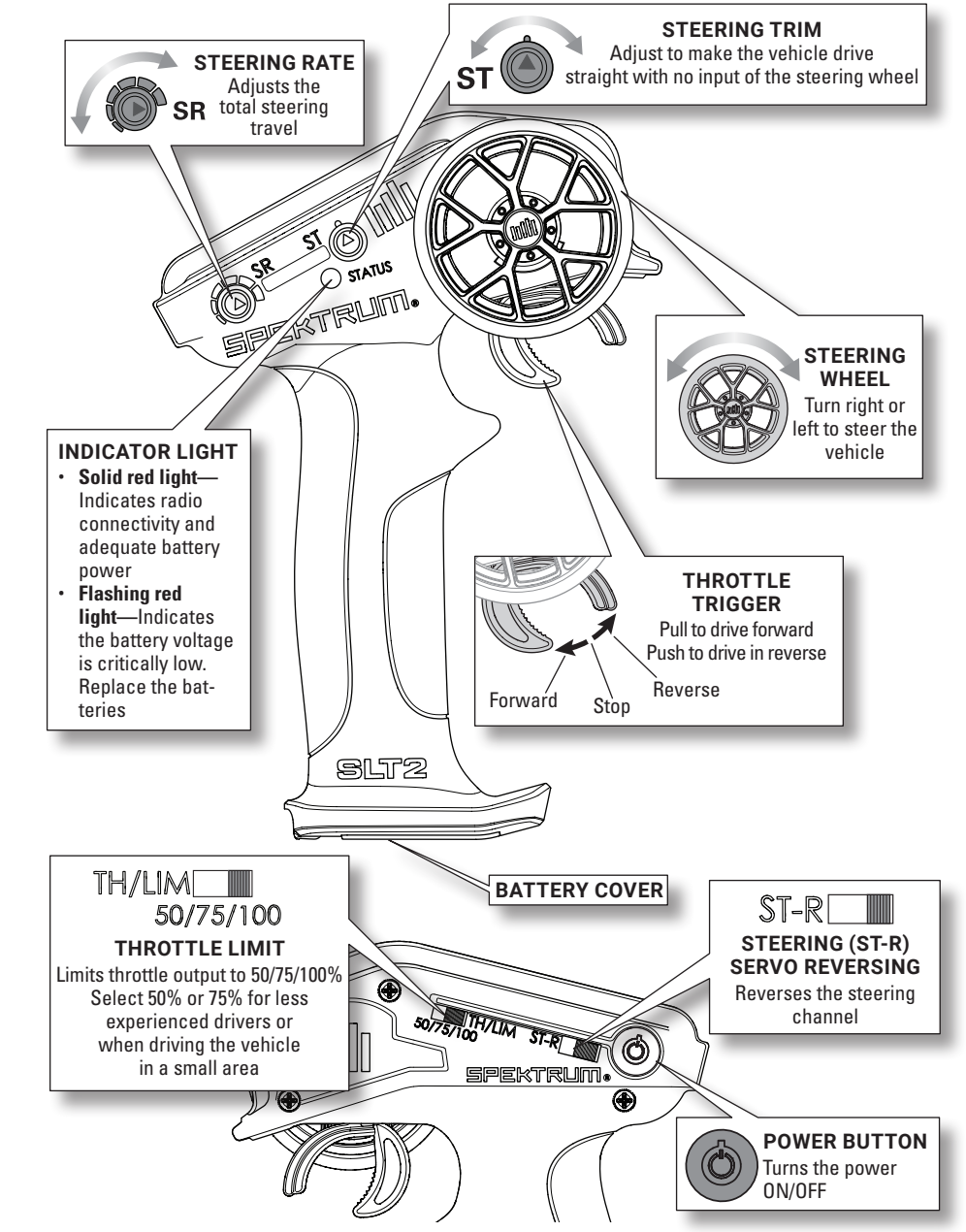

INSTALL THE TRANSMITTER BATTERIES

1. Press the battery compartment latch and rotate the batter cover to open.
2. Install 4 AA alkaline batteries, verifying correct polarity.
3. Close the battery cover until it latches.

CAUTION: NEVER remove the transmitter batteries while the vehicle is powered ON. Loss of vehicle control, damage, or injury may occur.

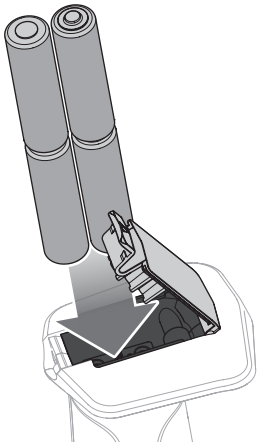

REMOVE THE VEHICLE BODY

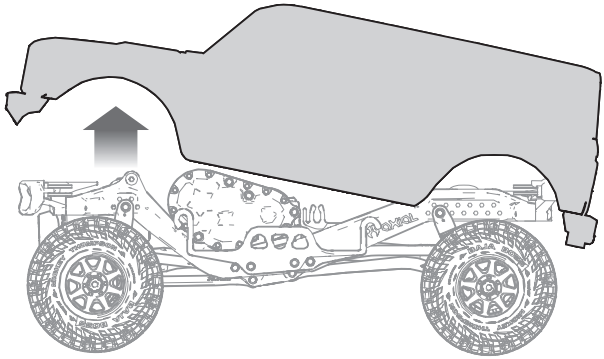

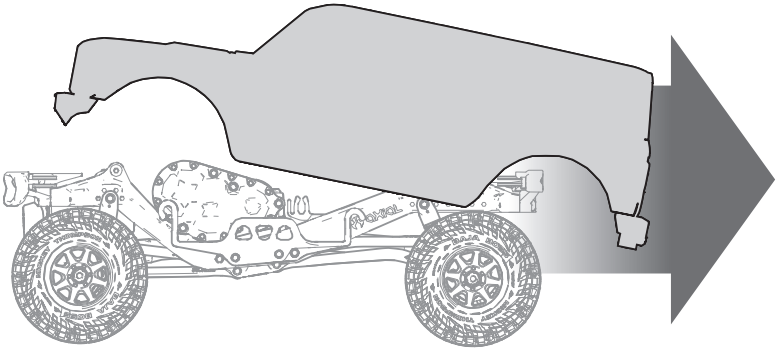

INSTALL THE VEHICLE BATTERY

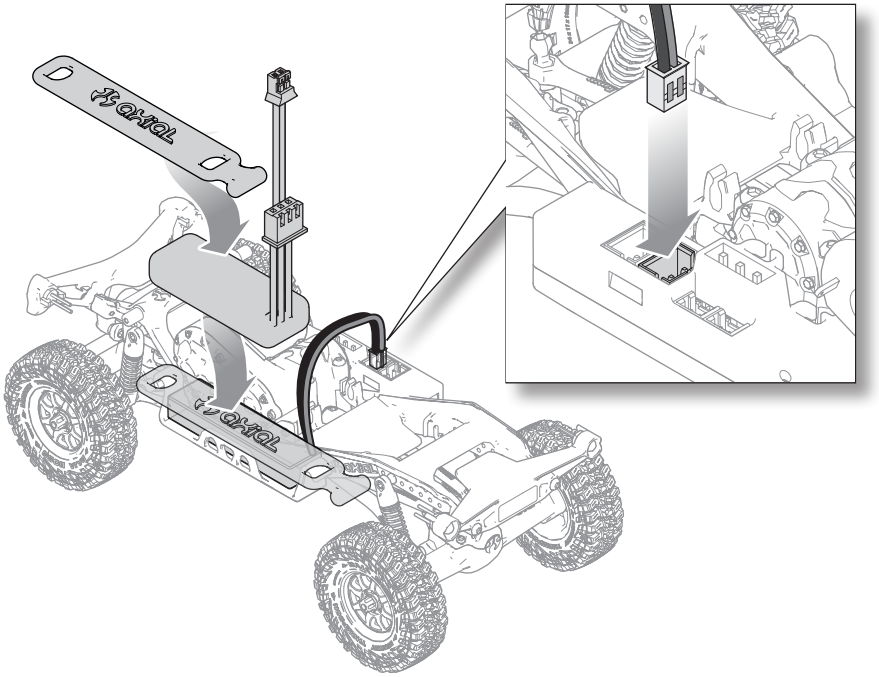

POWER ON THE TRANSMITTER

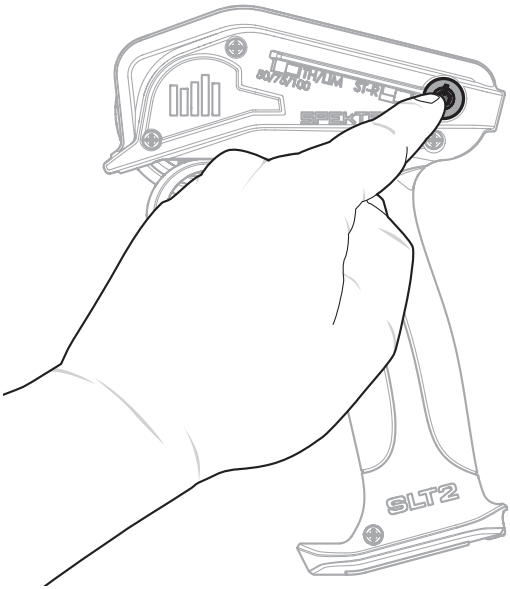

INSTALL THE BODY

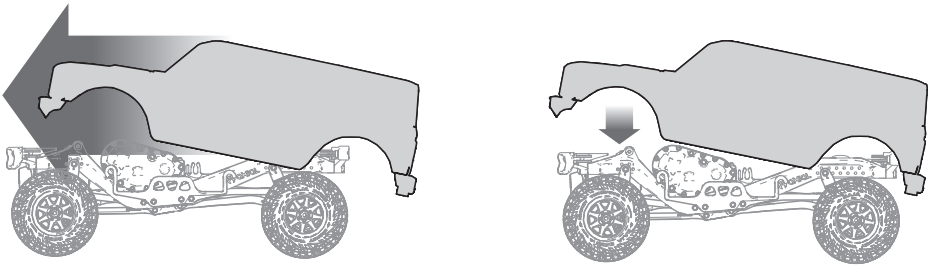

POWER ON THE VEHICLE

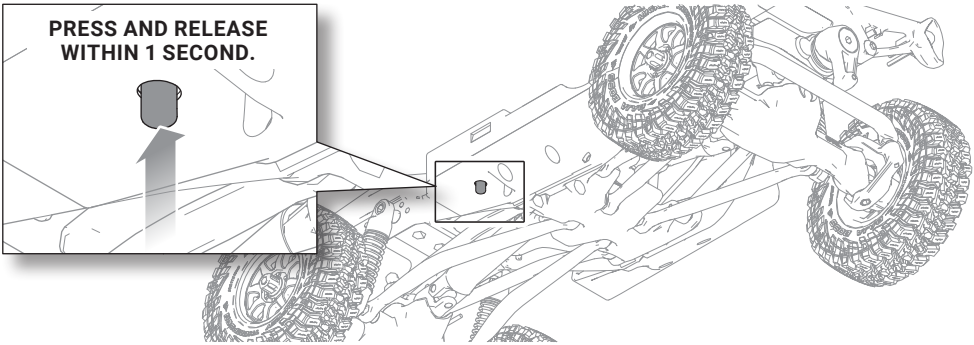

TEST THE CONTROLS

With the vehicle wheels off the ground, test the throttle and steering controls. Ensure the wheels spin in the proper direction and the front wheels turn in the proper direction with steering input.

After checking for proper direction of controls, start driving slowly. If the vehicle does not go straight without steering input, adjust the steering trim dial on the transmitter until the vehicle holds a straight line with no steering input.

Have FUN driving your vehicle!

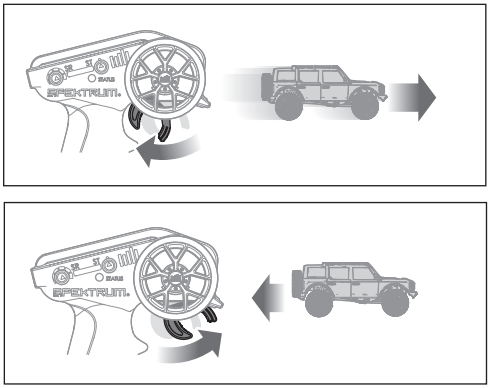

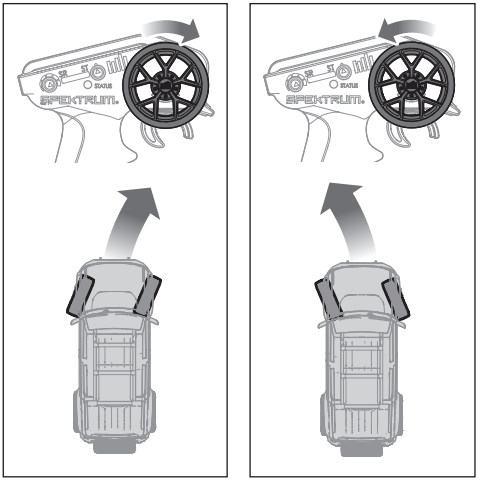

STEERING TRIM

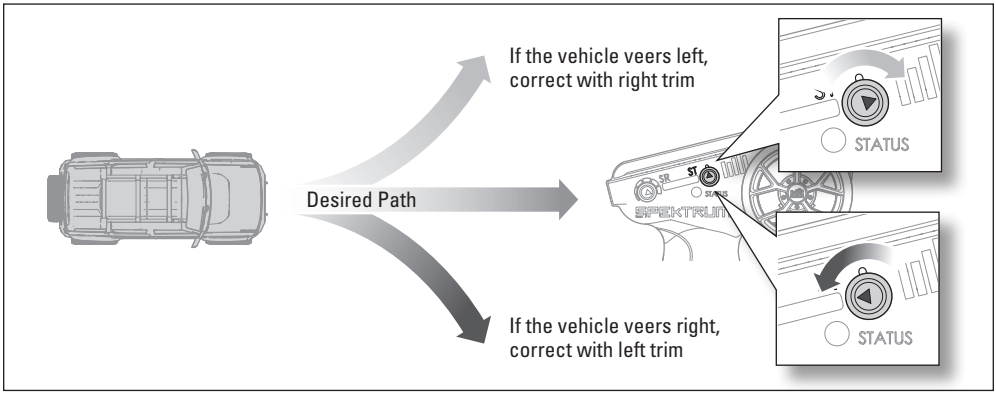

AFTER DRIVING

When you are finished driving your vehicle:

1. Press and hold for 1 second, then release to power off vehicle.

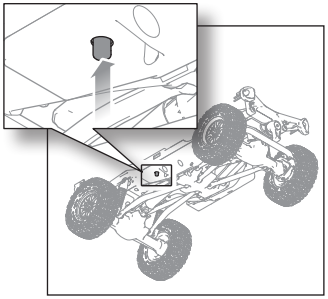

2. Press and hold for 1 second, then release to power off the transmitter.

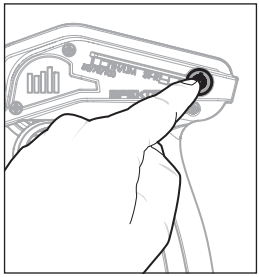

3. Remove the vehicle battery and charge if necessary. Gently unplug the battery plug by holding the wire close to the plug and carefully pulling straight up.

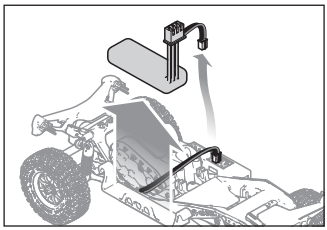

BINDING THE TRANSMITTER AND RECEIVER

Binding is the process of programming the receiver to recognize a specific transmitter signal, thus preventing interference from other transmitters. The transmitter and receiver included with your vehicle are bound at the factory. If you need to rebind, follow the instructions below.

NOTICE: Do not attempt to bind the transmitter and receiver if any other compatible transmitters are in bind mode within approximately 400 feet (120 meters). Doing so may result in unexpected binding to the wrong transmitter and loss of control of your vehicle.

Prior to starting the binding procedure, ensure the servos and motor are connected to the proper ports on the receiver and the transmitter has fresh batteries installed.

1. Connect the battery to the receiver.
2. Press and hold the power button for 3 seconds. The red light flashes rapidly.
3. Release the button. The receiver is in bind mode.
4. Power ON the transmitter.
5. When the 2-in-1 and transmitter LEDs glows solid, binding is complete.

The receiver LED will glow solid when both the transmitter and receiver are powered on. If the receiver LED flashes rapidly or is not illuminated, the transmitter and receiver are not bound. Power off both the transmitter and receiver and repeat the binding procedure.

BUTTON FUNCTIONS

Power ON/OFF: ON: Press and hold for 1 second. OFF: Press and hold for 1 second.

IMPORTANT: Do not leave the battery connected after use. Even when powered OFF there is a small current drain which will damage the battery.

PROGRAMMABLE SETTINGS

Use the power button to select programmable settings. Power the vehicle ON to begin programming the settings. The LED indicates the selection.

Running Mode Setting

There are four Running Modes.

1. Press and hold the power button for three seconds. The LED slowly flashes once.
2. Release the power button. The number of flashes indicates the Running Mode Setting.
3. Press the power button to move to the next option.
   - F/R with 100% Reverse Speed = Default setting
   - F/B/R with 100% Reverse Speed
   - F/R with 50% Reverse Speed
   - F/B/R with 50% Reverse Speed
4. Press and hold the power button for three seconds to save the selection and power OFF.

Drag Brake/Max Brake Setting

When the Running Mode set to F/R , drag brake is enabled with the default setting at 1 (0% drag brake). When the Running Mode is set to F/R/B, normal braking is enabled with the default setting at 100% braking force.

1. Press and hold the power button for six seconds. The LED flashes twice.
2. Release the power button. The number of flashes indicates the brake strength.
3. Press the power button to move to the next option.
   - Level 1 is minimum brake strength, level 5 is maximum brake strength.
   - Drag Brake Options (0%, 25%, 50%, 75%, 100%) default level 1, 0%
   - Max Brake Options (60%, 70%, 80%, 90%, 100%) default level 5, 100%
4. Press and hold the power button for three seconds to save the selection and power OFF.

Low Voltage Cutoff (LVC)

There are three LVC settings, each with a corresponding voltage protection threshold.
When the battery voltage reaches protection mode, the LED flashes slowly and motor speed is limited.
When the battery voltage reaches LVC, the LED flashes slowly and the motor powers OFF.

1. Press and hold the power button for nine seconds. The LED flashes three times.
2. Release the power button. The number of flashes indicates the LVC selection.
3. Press the power button to move to the next option.
   - 6.2V LVC (6.4V protection mode): Longer run time but quicker battery degradation.
   - 6.4V LVC (6.6V protection mode): Default, best balance of battery health and run time.
   - 6.6V LVC (6.8V protection mode): Least workload on the battery, shorter run times.
4. Press and hold the power button for three seconds to save the selection and power OFF.

Auto Shut-Off: The ESC powers OFF after 10 minutes of transmitter inactivity.

OVERHEAT PROTECTION

If the ESC overheats, the LED flashes rapidly, and the motor powers OFF.
When the ESC cools, the LED returns to normal, and the motor output returns to normal.

MOTOR TONE	
Two Short Tones	2S LiPo
One Long Tone	Receiver is ready to function

LED	
ON	Transmitter and receiver are connected and working properly.
Short ON / Long OFF	Transmitter is not connected to the receiver.
Slow Flash	Low battery voltage
Quick Flash During Power Up	Receiver is in bind mode.
Quick Flash During Use	Overheat protection mode

RECEIVER AND ESC WIRING DIAGRAM

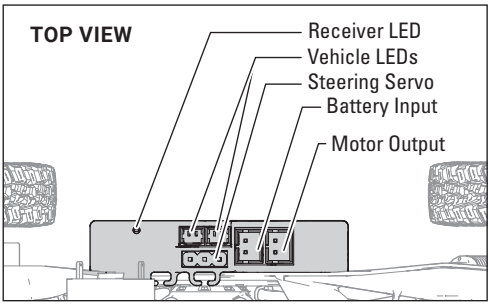

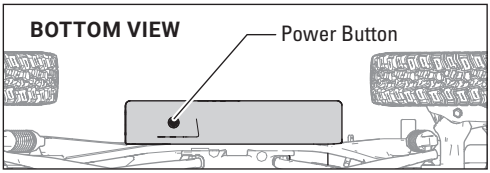

SPECIFICATIONS	
Voltage Range	6.0–8.4V
Operating Frequency	2.4GHz
Continuous/Peak Current	2.5A/5A
BEC Output	1.5A continuous/2A peak, 6V
Size	40 x 7 x 14mm

REPLACEMENT PARTS

PART #	DESCRIPTION
AXI-3285	88T 030-Size Brushed Motor
AXI-3311	Transmission, Assembled
AXI-3314	Battery Strap (3)
AXI-3316	Ball Stud Set
AXI-3317	Shock Set, Preassembled
AXI-3318	3 x 6 x 2mm, Ball Bearing, Sealed (12)
AXI-3320	Rear Axle, Assembled
AXI-3323	Battery Tray, Universal Mounts & Braces
AXI-3324	Front Axle, Assembled
AXI-3326	O-Ring Set
AXI-3327	Kingpin Screws
AXI-3328	Wheel Nut (8), Wheel Nut Tool
AXI-3331	Screw Set
AXI-3332	Motor Mount Screw (4)
AXI-3755	Servo Saver
AXI-4756	Chassis, Short Wheelbase
AXI-4757	Driveshaft Set, 91mm Short Wheelbase: SCX30
AXI-4758	Body: SCX30 CJ7
AXI-4759	Mounts and Cross Members
AXI-4760	91mm Short Wheelbase Link Set, Servo Horn: SCX30
AXI-4761	Windows & Lens Kit
AXI-4762	Bumpers, Winch, Genright

PART #	DESCRIPTION
AXI-4763	Genright Fenders & Cage, Doors, Bumpers
AXI-4764	Bumpers, Side Step/Exhaust
AXI-4765	Exterior Body Parts, Interior Parts
AXI-4766	Roof, Fender, Body Parts
AXI-4767	Decal Sheet: SCX30 CJ7
AXI-4768	M1 x 6mm Button Head, Philips (50)
AXI-4769	M1 x 4mm Button Head, Philips (50)
AXI-4770	LED, Front/Rear
AXI-4771	M1 x 8mm Button Head, Philips (50)
PRO1037103	MT Baja Boss Predator
PRO1037203	Goodyear Boulder MT Predator
PRO289003	American Racing AR23 Wheel
PRO289020	American Racing AR23 Wheel, Chrome (4)
PRO289103	Raceline Daytona Wheel w/ Bead Ring (4)
SPMRSLT270	SLT2 2CH 2.4Ghz Transmitter Only
SPMSSX112	SCX30 Servo
SPMXC0030	2S PH2.54 JST-XH 3-Pin LiPo USB-C 500mAh Charger
SPMX1122	7.4V 160mAh 2S 30C LiPo Battery: PH2.0
SPMXSE3225RX	SCX30 SLT Brushed 2-n-1 ESC/ Receiver

OPTIONAL PARTS

PART #	DESCRIPTION
DYN2826	Screwdriver: #00 Phillips
PRO369412	Pre-Cut Coyote High Performance Tough-Color Red Body
PRO369413	Pre-Cut Coyote High Performance Tough-Color Blue Body
PRO369417	Pre-Cut Coyote High Performance Clear Body
PRO641200	1/30 Pro-Spec Front/Rear (21.5mm) Aluminum Scaler Shocks
PRO641201	1/30 Pro-Spec Front/Rear (25mm) Scaler Shocks

PART #	DESCRIPTION
PRO647600	Pro-Line Gate Marker Set Blue (8) and Orange (4) for Micro Crawlers
PRO1031910	1/30 Aztek Front/Rear Mounted Black Clobber (4)
SPMR6130	DXC+ Transmitter Only
SPMR6220G	DX Rugged+ 12-Channel DSMR+ Transmitter, Green
SPMXC0220	S220 AC 2 x 20W Balance Charger

TROUBLESHOOTING

PROBLEM	POSSIBLE CAUSE	SOLUTION
Vehicle does not move	Batteries are not installed properly in the transmitter	Ensure the transmitter batteries are properly installed
	Weak or no battery in the vehicle	Install a freshly charged vehicle battery
	Damaged motor	Replace the motor
	Frayed or broken wiring	Replace any damaged wiring
	ESC is shut down by heat protection circuit	Allow the ESC to cool down completely
Loss of vehicle control	Improper antenna placement	Ensure the transmitter antenna is not blocked and the receiver antenna is located properly
	Weak or no batteries in the transmitter or vehicle	Install a freshly charged vehicle battery and new transmitter batteries
	Neutral or trim position is incorrect	Adjust the steering trim
	Receiver and/or battery not connected properly	Check all receiver and battery connections
Steering and/or throttle function is reversed	Servo travel is reversed at the transmitter	Set the transmitter servo reversing switch to the correct position
	Motor wires are not connected properly	Check all motor wires for correct polarity and secure connection

LIMITED WARRANTY

What This Warranty Covers—Horizon Hobby, LLC, (Horizon) warrants to the original purchaser that the product purchased (the "Product") will be free from defects in materials and workmanship for a period of 2 years from the date of purchase.

What is Not Covered—This warranty is not transferable and does not cover (i) cosmetic damage, (ii) damage due to acts of God, accident, misuse, abuse, negligence, commercial use, or due to improper use, installation, operation or maintenance, (iii) modification of or to any part of the Product, (iv) attempted service by anyone other than a Horizon Hobby authorized service center, (v) Product not purchased from an authorized Horizon dealer, or (vi) Product not compliant with applicable technical regulations or (vii) use that violates any applicable laws, rules, or regulations.

OTHER THAN THE EXPRESS WARRANTY ABOVE, HORIZON MAKES NO OTHER WARRANTY OR REPRESENTATION, AND HEREBY DISCLAIMS ANY AND ALL IMPLIED WARRANTIES, INCLUDING, WITHOUT LIMITATION, THE IMPLIED WARRANTIES OF NON-INFRINGEMENT, MERCHANTABILITY AND FITNESS FOR A PARTICULAR PURPOSE. THE PURCHASER ACKNOWLEDGES THAT THEY ALONE HAVE DETERMINED THAT THE PRODUCT WILL SUITABLY MEET THE REQUIREMENTS OF THE PURCHASER'S INTENDED USE.

Purchaser's Remedy—Horizon's sole obligation and purchaser's sole and exclusive remedy shall be that Horizon will, at its option, either (i) service, or (ii) replace, any Product determined by Horizon to be defective. Horizon reserves the right to inspect any and all Product(s) involved in a warranty claim. Service or replacement decisions are at the sole discretion of Horizon. Proof of purchase is required for all warranty claims. SERVICE OR REPLACEMENT AS PROVIDED UNDER THIS WARRANTY IS THE PURCHASER'S SOLE AND EXCLUSIVE REMEDY.

Limitation of Liability—HORIZON SHALL NOT BE LIABLE FOR SPECIAL, INDIRECT, INCIDENTAL OR CONSEQUENTIAL DAMAGES, LOSS OF PROFITS OR PRODUCTION OR COMMERCIAL LOSS IN ANY WAY, REGARDLESS OF WHETHER SUCH CLAIM IS BASED IN CONTRACT, WARRANTY, TORT, NEGLIGENCE, STRICT LIABILITY OR ANY OTHER THEORY OF LIABILITY, EVEN IF HORIZON HAS BEEN ADVISED OF THE POSSIBILITY OF SUCH DAMAGES. Further, in no event shall the liability of Horizon exceed the individual price of the Product on which liability is asserted. As Horizon has no control over use, setup, final assembly, modification or misuse, no liability shall be assumed nor accepted for any resulting damage or injury. By the act of use, setup or assembly, the user accepts all resulting liability. If you as the purchaser or user are not prepared to accept the liability associated with the use of the Product, purchaser is advised to return the Product immediately in new and unused condition to the place of purchase.

Law—These terms are governed by Illinois law (without regard to conflict of law principals). This warranty gives you specific legal rights, and you may also have other rights which vary from state to state. Horizon reserves the right to change or modify this warranty at any time without notice.

WARRANTY SERVICES

Questions, Assistance, and Services—Your local hobby store and/or place of purchase cannot provide

warranty support or service. Once assembly, setup or use of the Product has been started, you must contact your local distributor or Horizon directly. This will enable Horizon to better answer your questions and service you in the event that you may need any assistance. For questions or assistance, please visit our website at www.horizonhobby.com, submit a Product Support Inquiry, or call the toll free telephone number referenced in the Warranty and Service Contact Information section to speak with a Product Support representative.

Inspection or Services—If this Product needs to be inspected or serviced and is compliant in the country you live and use the Product in, please use the Horizon Online Service Request submission process found on our website or call Horizon to obtain a Return Merchandise Authorization (RMA) number. Pack the Product securely using a shipping carton. Please note that original boxes may be included, but are not designed to withstand the rigors of shipping without additional protection. Ship via a carrier that provides tracking and insurance for lost or damaged parcels, as Horizon is not responsible for merchandise until it arrives and is accepted at our facility. An Online Service Request is available at http://www.horizonhobby.com/content/service-center_render-service-center. If you do not have internet access, please contact Horizon Product Support to obtain a RMA number along with instructions for submitting your product for service. When calling Horizon, you will be asked to provide your complete name, street address, email address and phone number where you can be reached during business hours. When sending product into Horizon, please include your RMA number, a list of the included items, and a brief summary of the problem. A copy of your original sales receipt must be included for warranty consideration. Be sure your name, address, and RMA number are clearly written on the outside of the shipping carton.

NOTICE: Do not ship LiPo batteries to Horizon. If you have any issue with a LiPo battery, please contact the appropriate Horizon Product Support office.

Warranty Requirements—For Warranty consideration, you must include your original sales receipt verifying the proof-of-purchase date. Provided warranty conditions have been met, your Product will be serviced or replaced free of charge. Service or replacement decisions are at the sole discretion of Horizon.

Non-Warranty Service—Should your service not be covered by warranty, service will be completed and payment will be required without notification or estimate of the expense unless the expense exceeds 50% of the retail purchase cost. By submitting the item for service you are agreeing to payment of the service without notification. Service estimates are available upon request. You must include this request with your item submitted for service. Non-warranty service estimates will be billed a minimum of 1/2 hour of labor. In addition you will be billed for return freight. Horizon accepts money orders and cashier's checks, as well as Visa, MasterCard, American Express, and Discover cards. By submitting any item to Horizon for service, you are agreeing to Horizon's Terms and Conditions found on our website http://www.horizonhobby.com/content/service-center_render-service-center.

ATTENTION: Horizon service is limited to Product compliant in the country of use and ownership. If received, a non-compliant Product will not be serviced. Further, the sender will be responsible for arranging return shipment of the un-serviced Product, through a carrier of the sender's choice and at the sender's expense. Horizon will hold non-compliant Product for a period of 60 days from notification, after which it will be discarded.

10/15

WARRANTY AND SERVICE CONTACT INFORMATION

COUNTRY OF PURCHASE	HORIZON HOBBY	CONTACT INFORMATION	ADDRESS
United States of America	Horizon Service Center (Repairs and Repair Requests)	servicecenter.horizonhobby.com/RequestForm/	2904 Research Rd Champaign, IL 61822
	Horizon Product Support (Product Technical Assistance)	productsupport@horizonhobby.com 877-504-0233	
	Sales	websales@horizonhobby.com 800-338-4639	
European Union	Horizon Technischer Service	service@horizonhobby.eu	Hanskampring 9 D 22885 Barsbüttel, Germany
	Sales: Horizon Hobby GmbH	+49 (0) 4121 2655 100	

FCC INFORMATION

FCC ID: BRWSPMSLT200F

This equipment complies with FCC and IC radiation exposure limits set forth for an uncontrolled environment. This equipment should be installed and operated with minimum distance 20cm between the radiator and/or antenna and your body (excluding fingers, hands, wrists, ankles and feet). This transmitter must not be co-located or operating in conjunction with any other antenna or transmitter.

SUPPLIER'S DECLARATION OF CONFORMITY
AXIAL SCX30 1/30TH SCALE 4WD RTR

This device complies with part 15 of the FCC Rules. Operation is subject to the following two conditions: (1) This device may not cause harmful interference, and (2) this device must accept any interference received, including interference that may cause undesired operation.

CAUTION: Changes or modifications not expressly approved by the party responsible for compliance could void the user's authority to operate the equipment.

NOTE: This equipment has been tested and found to comply with the limits for a Class B digital device, pursuant to part 15 of the FCC Rules. These limits are designed to provide reasonable protection against harmful interference in a residential installation. This equipment generates, uses and can radiate radio frequency energy and, if not installed and used in accordance with the instructions, may cause harmful interference to radio communications. However, there is no guarantee that interference will not occur in a particular installation. If this equipment does cause harmful interference to radio or television reception, which can be determined by turning the equipment off and on, the user is encouraged to try to correct the interference by one or more of the following measures:

- Reorient or relocate the receiving antenna.
- Increase the separation between the equipment and receiver.
- Connect the equipment into an outlet on a circuit different from that to which the receiver is connected.
- Consult the dealer or an experienced radio/TV technician for help.

Horizon Hobby, LLC
2904 Research Road,
Champaign, IL 61822
Email: compliance@horizonhobby.com
Web: HorizonHobby.com

IC INFORMATION

IC: 6157A-SPMSLT200F
CAN ICES-3 (B)/NMB-3(B)

This device contains license-exempt transmitter(s)/ receivers(s) that comply with Innovation, Science, and Economic Development Canada's license-exempt RSS(s). Operation is subject to the following 2 conditions:

1. This device may not cause interference.
2. This device must accept any interference, including interference that may cause undesired operation of the device.

COMPLIANCE INFORMATION FOR THE EUROPEAN UNION

EU COMPLIANCE STATEMENT:
Axial SCX30 1/30th Scale 4WD RTR:
Hereby, Horizon Hobby, LLC declares that the device is in compliance with the following: EU Low Voltage Directive 2014/35/EU; EU EMC Directive 2014/30/EU; EU Radio Equipment Directive 2014/53/EU; RoHS 2 Directive 2011/65/EU; RoHS 3 Directive - Amending 2011/65/EU Annex II 2015/863.
The full text of the EU declaration of conformity is available at the following internet address: https://www.horizonhobby.com/content/support-render-compliance.

NOTE: This product contains batteries that are covered under the 2006/66/EC European Directive, which cannot be disposed of with normal household waste. Please follow local regulations.

Wireless Frequency Range and Wireless Output Power:

Transmitter:
2410MHz-2480MHz
13.66 dBm

E328 UKCA

EU Manufacturer of Record:
Horizon Hobby, LLC
2904 Research Road
Champaign, IL 61822 USA

EU Importer of Record:
Horizon Hobby, GmbH
Hanskampring 9
22885 Barsbüttel Germany

WEEE NOTICE:

This appliance is labeled in accordance with European Directive 2012/19/EU concerning waste of electrical and electronic equipment (WEEE). This label indicates that this product should not be disposed of with household waste. It should be deposited at an appropriate facility to enable recovery and recycling.

EXPLODED VIEWS // EXPLOSIONSZEICHNUNGEN // VUES ÉCLATÉES // VISTE ESPLOSE

AXI-3311
Transmission (assembled)
Getriebe(montiert)
Transmission (assemblée)
Trasmissione (assemblata)

AXI-3318
Bearing Set
Lagersatz
Ensemble de roulement
Set cuscinetti

AXI-3331
Screw Set
Schraubensatz
Ensemble de vis
Set viti

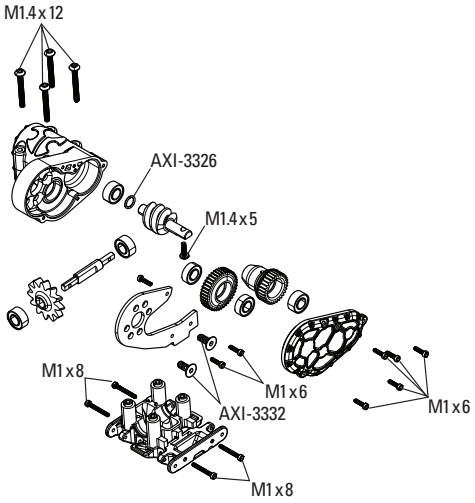

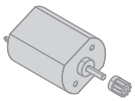

030-Size Brushed Motor, sold separately
030er Bürstenmotor, separat erhältlich
Moteur à balais taille 030, vendu séparément
Motore a spazzole 030, venduto separatamente

AXI-4757
Driveshaft Set, 91mm Short Wheelbase
Antriebswellenbausatz, 91 mm kurzer Radstand
Ensemble d'arbres de transmission, empattement court de 91 mm
Set albero di trasmissione per passo corto da 91 mm

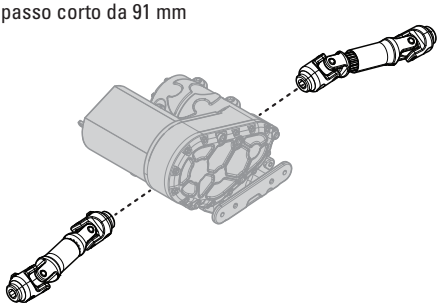

EXPLODED VIEWS // EXPLOSIONSZEICHNUNGEN // VUES ÉCLATÉES // VISTE ESPLOSE

AXI-3324
Front Axle (assembled)
Assale anteriore (assemblato)
Essieu avant (assemblé)
Assale anteriore (assemblato)

AXI-3318
Bearing Set
Lagersatz
Ensemble de roulement
Set cuscinetti

AXI-3331
Screw Set
Schraubensatz
Ensemble de vis
Set viti

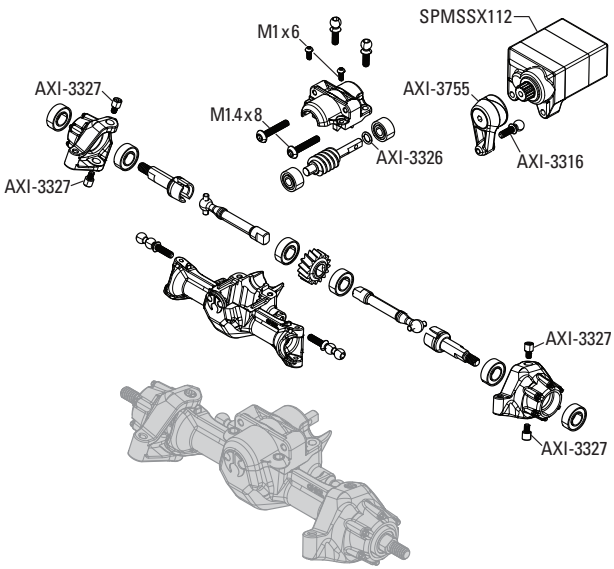

AXI-3320
Rear Axle (assembled)
Hinterachse (montiert)
Essieu arrière (assemblé)
Assale posteriore (assemblato)

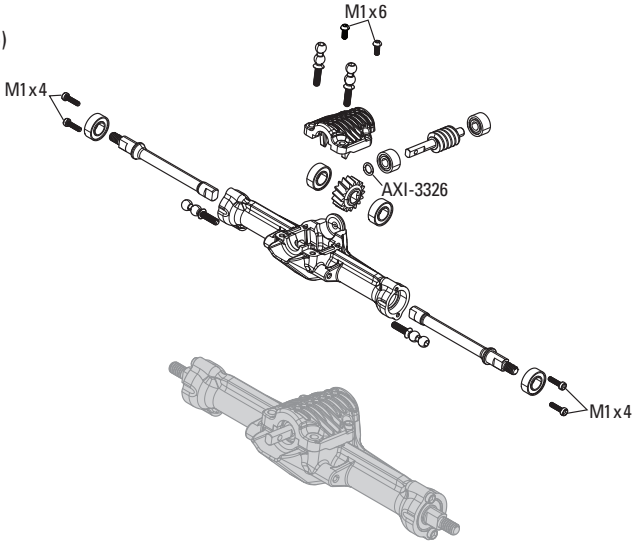

EXPLODED VIEWS // EXPLOSIONSZEICHNUNGEN // VUES ÉCLATÉES // VISTE ESPLOSE

AXI-4760
91mm Short Wheelbase Link Set, Servo Horn
Gestängebausatz, 91 mm kurzer Radstand, Servo-Steuerungsgestänge
Ensemble de tringlerie à empattement court de 91 mm, renvoi de commande du servo
Set leveraggio per passo corto da 91 mm, leveraggio servocomando

AXI-3316
Ball Stud Set
Kugelzapfensatz
Ensemble piton à rotule
Set bulloni a sfera

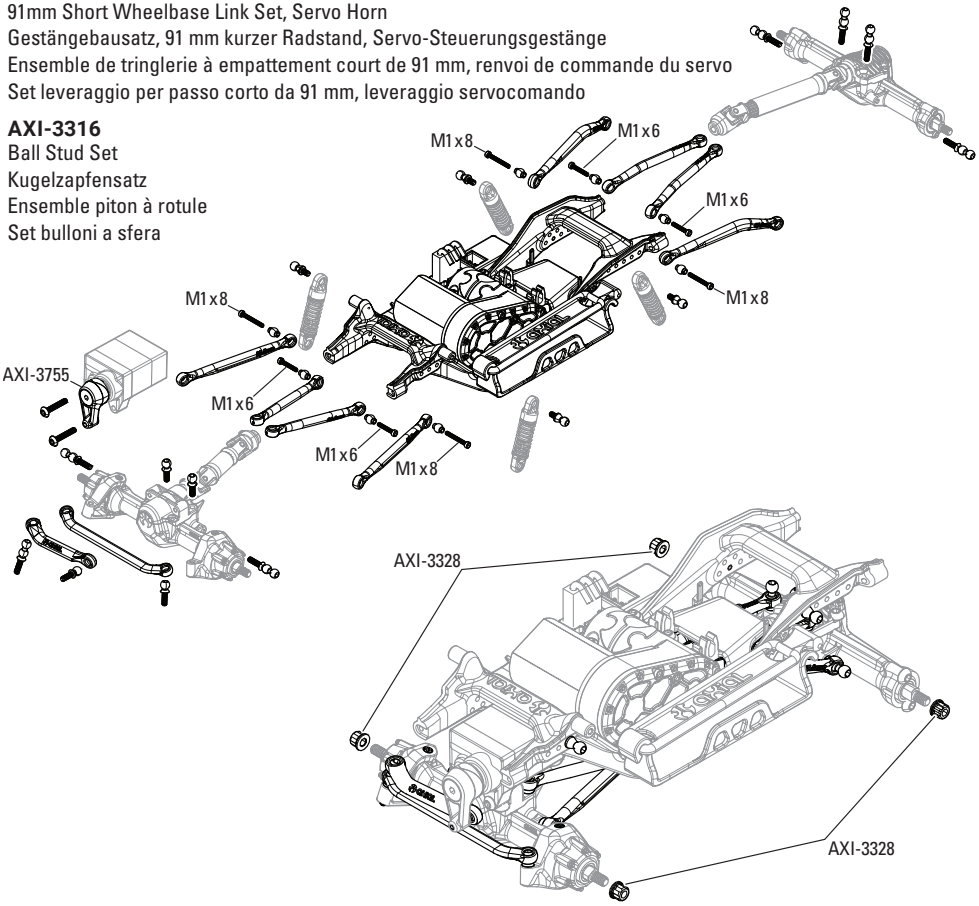

AXI-4756
Chassis, Short Wheelbase
Fahrwerk, kurzer Radstand
Châssis, empattement court
Telaio, passo corto

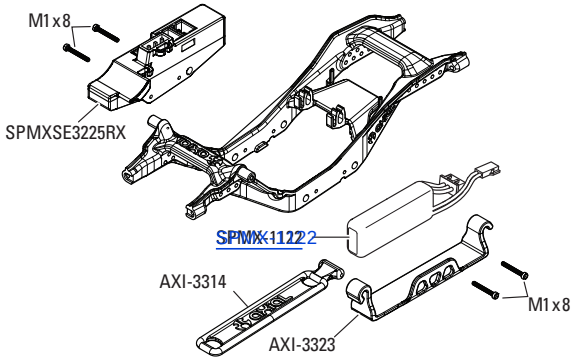

EXPLODED VIEWS // EXPLOSIONSZEICHNUNGEN // VUES ÉCLATÉES // VISTE ESPLOSE

AXI-4758

Body Set
Gehäusesatz
Ensemble de carrosserie
Set carrozzeria

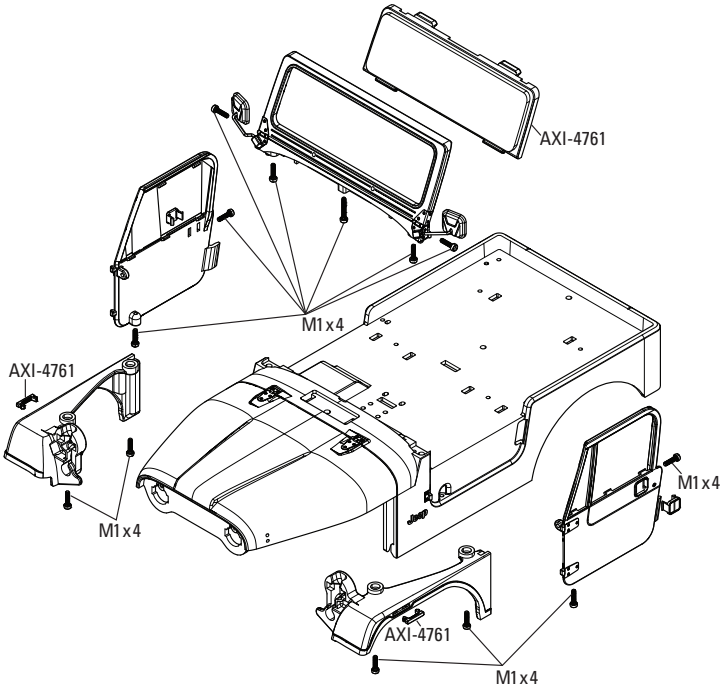

EXPLODED VIEWS // EXPLOSIONSZEICHNUNGEN // VUES ÉCLATÉES // VISTE ESPLOSE

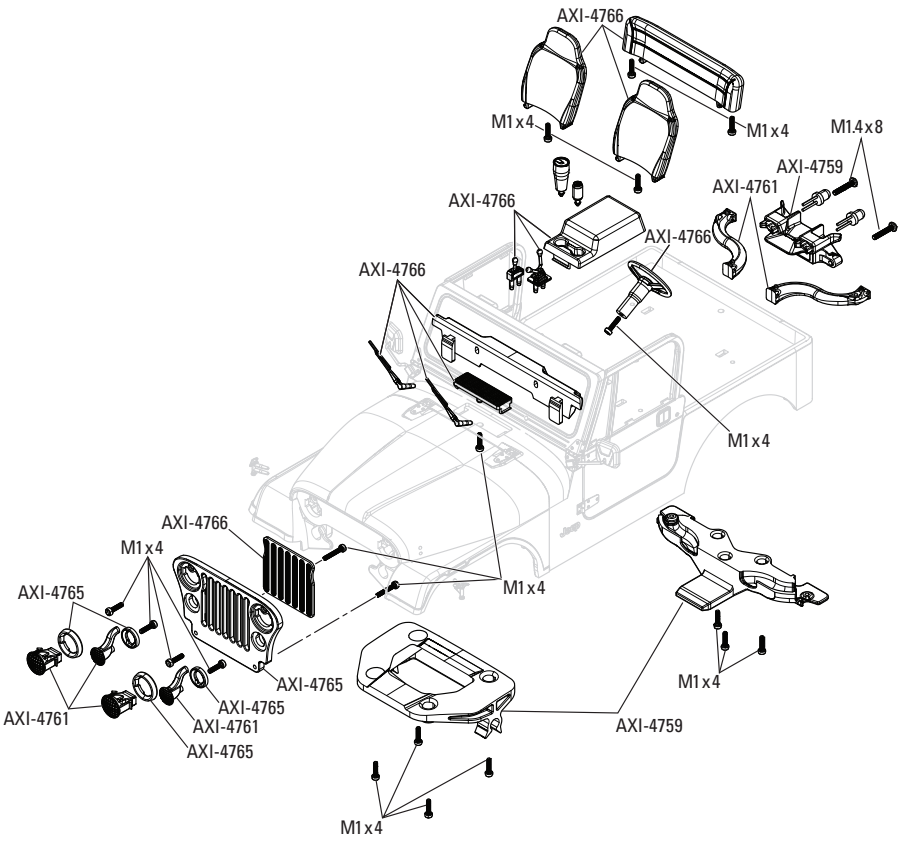

EXPLODED VIEWS // EXPLOSIONSZEICHNUNGEN // VUES ÉCLATÉES // VISTE ESPLOSE

AXI-3273T1 JEEP CJ-7 4X4 RTR BRUSHED ROCK CRAWLER

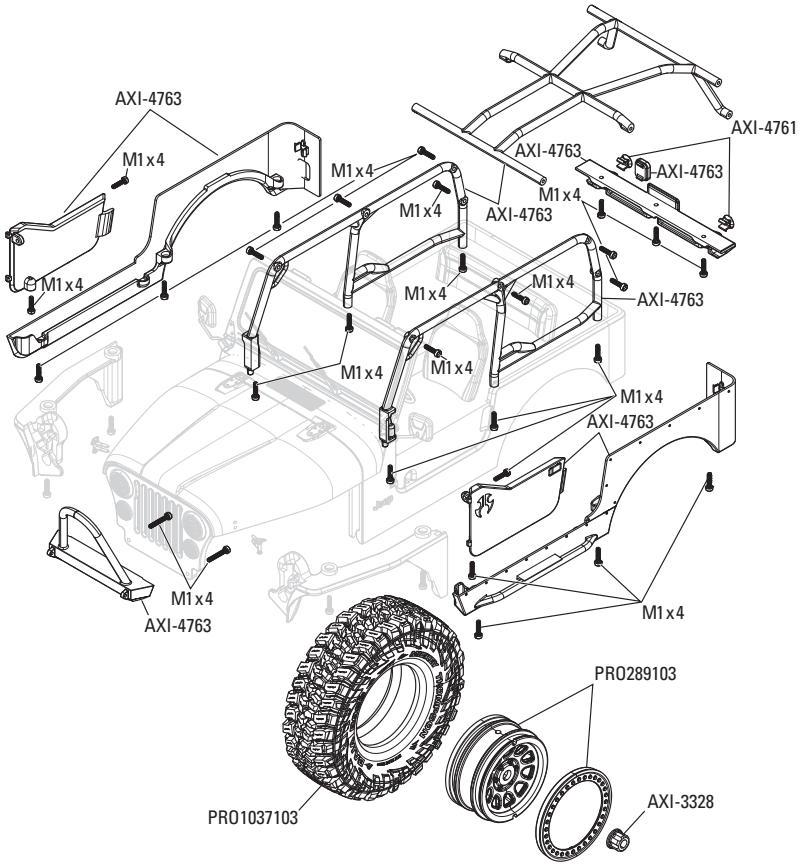

EXPLODED VIEWS // EXPLOSIONSZEICHNUNGEN // VUES ÉCLATÉES // VISTE ESPLOSE

AXI-3273T2 JEEP CJ-7 4X4 RTR BRUSHED ROCK CRAWLER

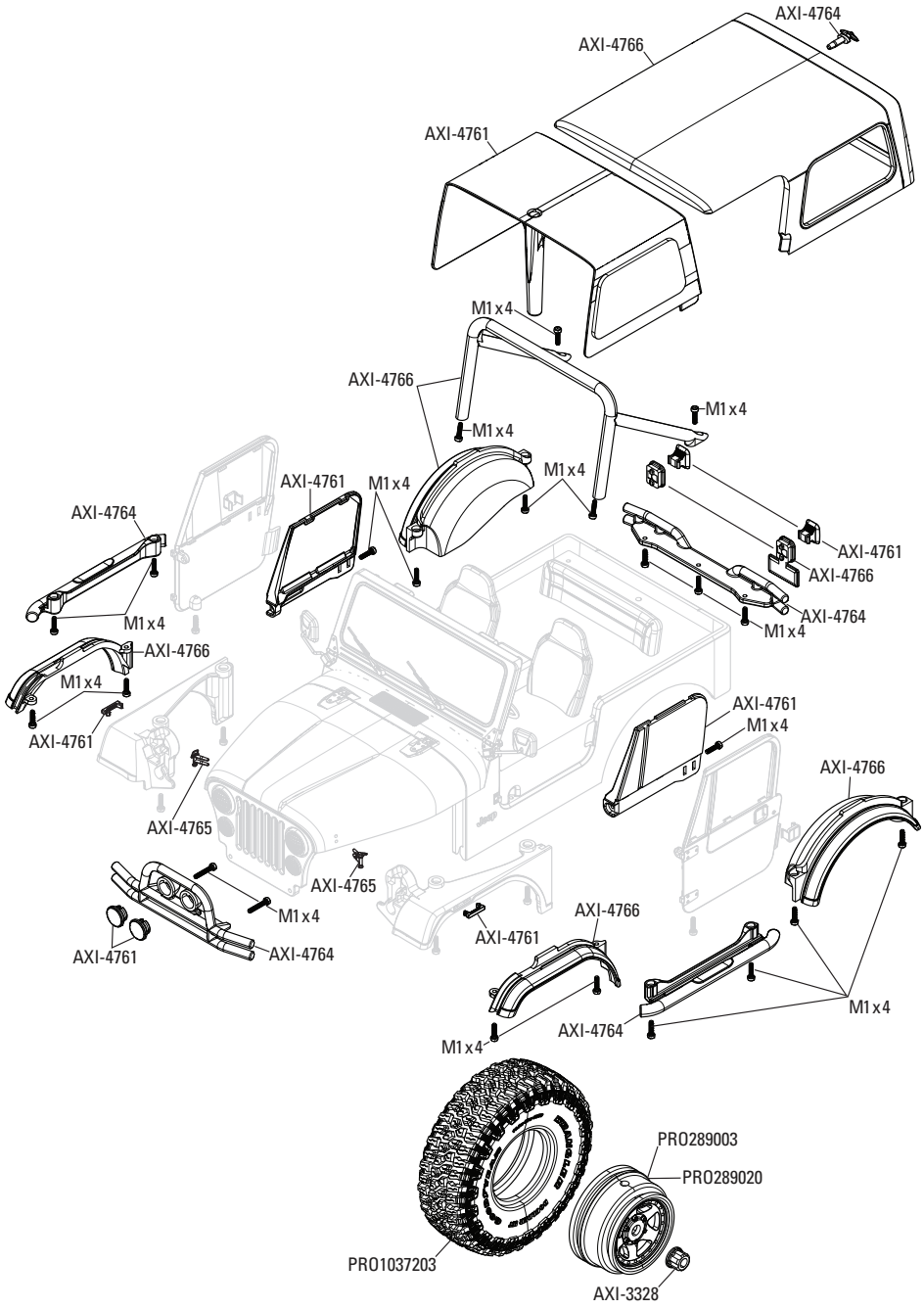



EXPLORE

FACEBOOK.COM/AXIALINC
INSTAGRAM.COM/AXIALADVENTURE
TWITTER.COM/AXIALRC
YOUTUBE.COM/AXIALVIDEOS

axialadventure.com

©2026 Horizon Hobby, LLC.
Axial, the Axial logo, SCX30, and the Horizon Hobby logo are trademarks or registered trademarks of Horizon Hobby, LLC. The Spektrum trademark is used with permission of Bachmann Industries, Inc. Jeep, the Jeep grille and related logos, vehicle model names and trade dress are trademarks of FCA US LLC and used under license by Horizon Hobby, LLC. ©2026 FCA US LLC. All other trademarks, service marks and logos are property of their respective owners.
Updated 9/26 AXI-3273 1291072.1