UG

VENTURE 18
User Guide



STOP AT NOTHING.

WWW.HPIRACING.COM

hpi·racing

En 160800-006-UG

Thank you

VENTURE 18

Thank you for selecting this HPI RACING product!

This kit is designed to be fun to drive and uses top quality parts for durability and performance. The instruction manual you are reading was designed to be easy to follow yet thorough in its explanations. HPI Racing wants you to enjoy driving your new R/C kit. If you come across any problems or need some help getting through a step, you can contact us on the internet at www.hpiracing.com.

This is a high performance R/C kit, and it requires regular maintenance for best performance. If you don't do regular maintenance, the performance will suffer. HPI has all the necessary parts and accessories available to keep your car performing at its best.

The caution or attention symbols will warn you about steps that can be very dangerous.

Please read and understand the instructions carefully before proceeding.



Cautions — Failure to follow these instructions can damage your kit and cause serious bodily injury or death.



Attention — Failure to follow these instructions can cause injury to yourself or others.

You might also cause property damage or damage your kit.



Cautions

Before Running	Read this manual before you operate the vehicle. If necessary, ask a parent, guardian, or responsible adult to help you.
While Operating	Do not operate the vehicle on public streets. This can cause serious accidents, personal injury, or property damage.
	Please do not run near pedestrians or small children.
Before Operating	Make sure that all screws and nuts are properly tightened.
	Always use fresh batteries for your transmitter to avoid losing control of the model.
	Make sure that the vehicle battery is fully charged.
	Make sure that the throttle trigger is in the neutral position.
After Running	Switch off the vehicle FIRST, then switch off the transmitter. Disconnect the battery from the ESC/controller.
	After you operate an HPI RACING product, we strongly suggest you complete the routine maintenance. Without this maintenance, wear can increase and damage can occur to the motor and chassis.
Battery safety	Please be careful when handling the battery. It will be hot after running. If the wire is frayed, a short circuit can cause a fire.

Contents

VENTURE 18

Section	Contents	Page
1	**Troubleshooting**	**4**
2	**Maintenance**	**5**
2-1	Chassis Maintenance	6
2-2	Wheel Maintenance	8
2-3	Differential Maintenance	9
2-4	Transmission Maintenance	12
2-5	Shock Maintenance	15

Additional Information

QS	*Quick Start Guide*	+ www
TG	*Technical Guide*	+ www
SG	*Startup Guide*	www
RM	*Transmitter Manual*	www
EM	*ESC Manual*	www
UG	*This Guide*	www

i **EM 1-1**

NOTE - This refers to the relevant guide (as above) and the relevant section. In this example, Section 1-1 of the ESC Manual.

1 Troubleshooting

If the RC car does not move or you cannot control it, refer to the table below.

Problem	Possible cause	Remedy
The car does not respond to the transmitter.	The transmitter or car/receiver is switched off.	Switch on the transmitter FIRST, then switch on the car/receiver.
	The transmitter batteries are installed incorrectly.	Reinstall the batteries, observing the correct polarity.
	The transmitter batteries are low or missing.	Install fresh batteries or fully charged rechargeable batteries of the specified type.
	The car battery is discharged, disconnected or missing.	Install a charged battery. Make sure that it is securely connected.
	The transmitter and receiver are not bound correctly.	Bind the transmitter and receiver (RM 3-1). Then check that the fail-safe operates correctly.
The steering works, but the car does not move.	The motor connection is loose or disconnected.	Switch off the car. Disconnect the battery. Examine the motor wiring. Reconnect the wiring as specified in the ESC instructions.
	The wiring is frayed or broken.	Switch off the car. Disconnect the battery. Repair or replace the damaged wiring before use.
	The motor is damaged.	Replace the motor with a suitable replacement.
The car stops during use.	The car battery is discharged.	Stop driving. Recharge the battery according to the battery and charger instructions.
	The ESC has shut down because of overheating.	Stop driving immediately. Do not drive the car again until the ESC has cooled down.
Control is intermittent or lost.	The transmitter batteries or car battery are low.	Replace depleted transmitter batteries with fresh batteries, or recharge them if they are rechargeable. Recharge the car battery as needed.
	The car is outside the operating range.	Move closer to the car. Make sure that the car responds correctly to the transmitter before you drive again.
The car does not drive straight.	The steering trim is incorrect.	Adjust the steering trim until the wheels are correctly aligned and the car drives straight.
The steering operates in the opposite direction.	The Steering Reverse setting is incorrect.	Change the Steering Reverse setting on the transmitter. Make sure that the steering operates in the correct direction.
The throttle operates in the opposite direction.	The Throttle Reverse setting or ESC setup is incorrect.	Make sure that the Throttle Reverse setting is correct. Follow the ESC setup procedure in the relevant manual.
	The motor wiring or motor direction setting is incorrect.	Make sure that the motor connections and motor direction setting agree with the instructions for the installed motor and ESC.

Recommended Tools

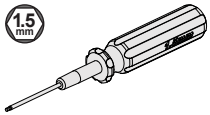

Allen Wrench

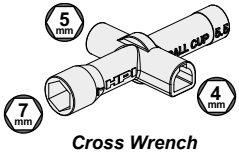

Cross Wrench

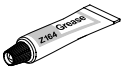

Z164 Grease

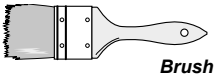
Brush

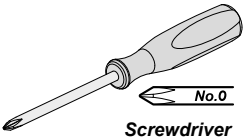

Screwdriver

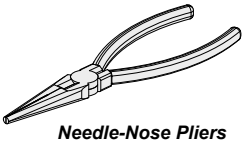
Needle-Nose Pliers


Rag


Oil Spray



Car Cleaner

Maintenance schedule

Refer to the chart for the maintenance schedule. After each run, clean the chassis. Examine all moving parts for damage. Repair or replace broken or damaged parts before the next run. Regular maintenance helps prevent damage and maintain the car's performance.

! Refer to the spare parts list for replacement part numbers.

! Look for any damaged parts.

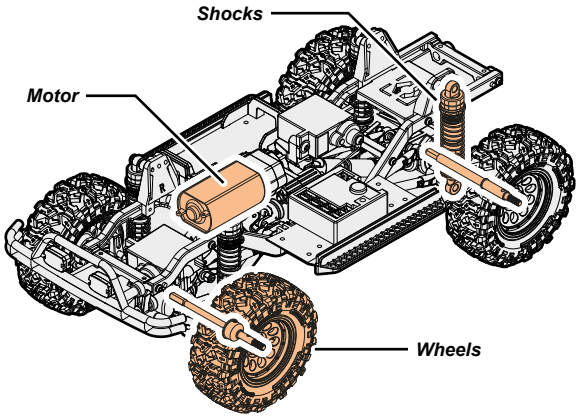

x1 Every Pack.	x10 Every 10 Packs.	x20 Every 20 Packs.	Maintenance Item	Section Reference	
✓	✓	✓	Chassis Maintenance	2-1	PG 6
✓	✓	✓	Wheel Maintenance	2-2	PG 8
		✓	Differential Maintenance	2-3	PG 9
		✓	Transmission Maintenance	2-4	PG 12
	✓	✓	Shock Maintenance	2-5	PG 15
✓	✓	✓	Radio Maintenance	RM	

2-1 *Chassis Maintenance*

After each run, clean the car. Lubricate the metal-to-metal contact points. Replace damaged parts. Make sure that all screws are tight.

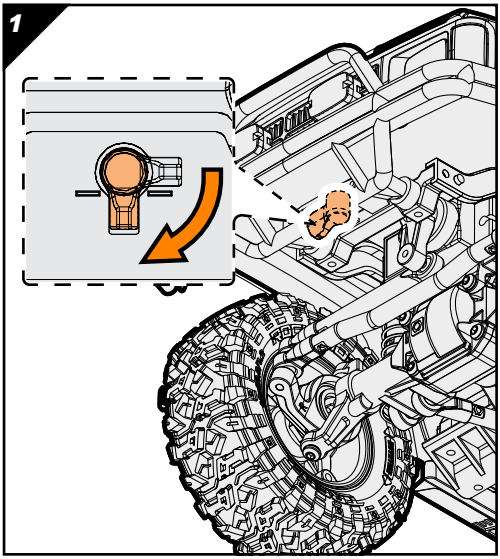

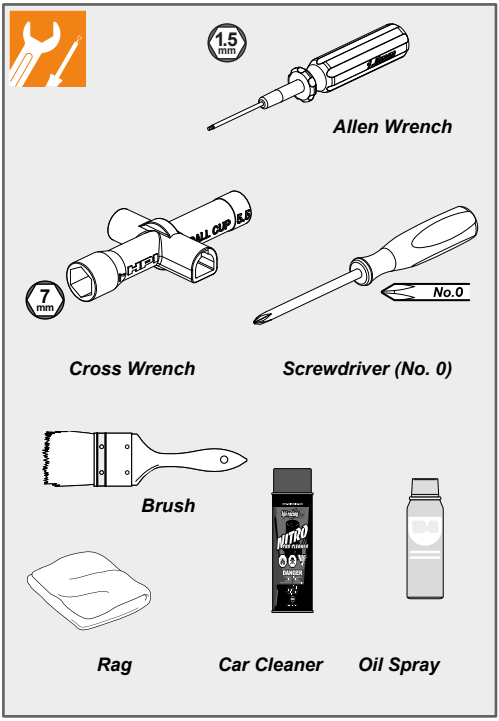

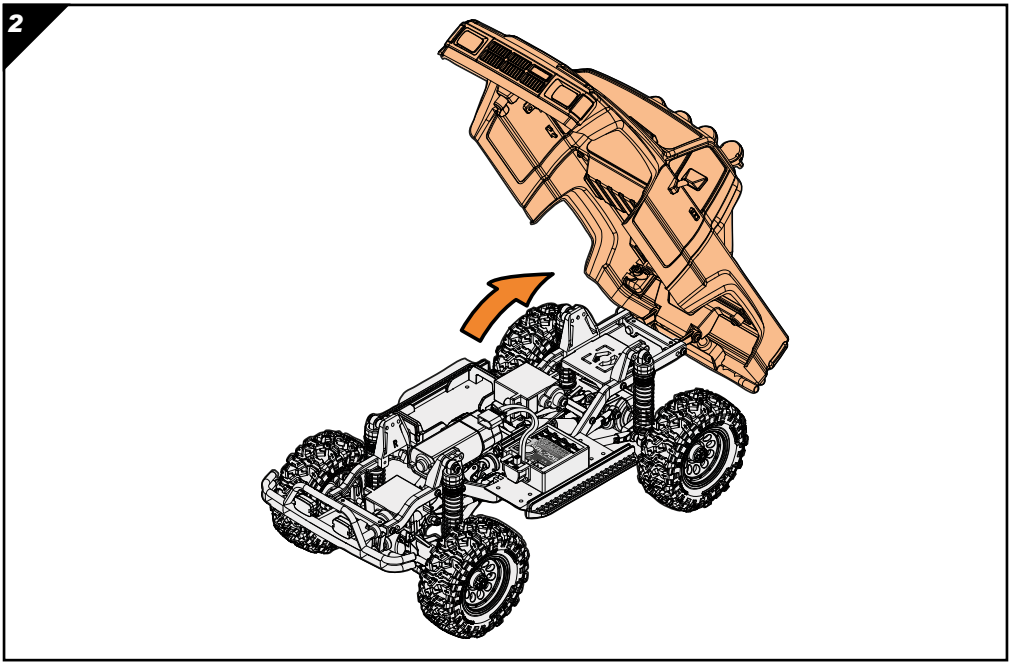

3

Remove the two button-head screws to release the body from the chassis.

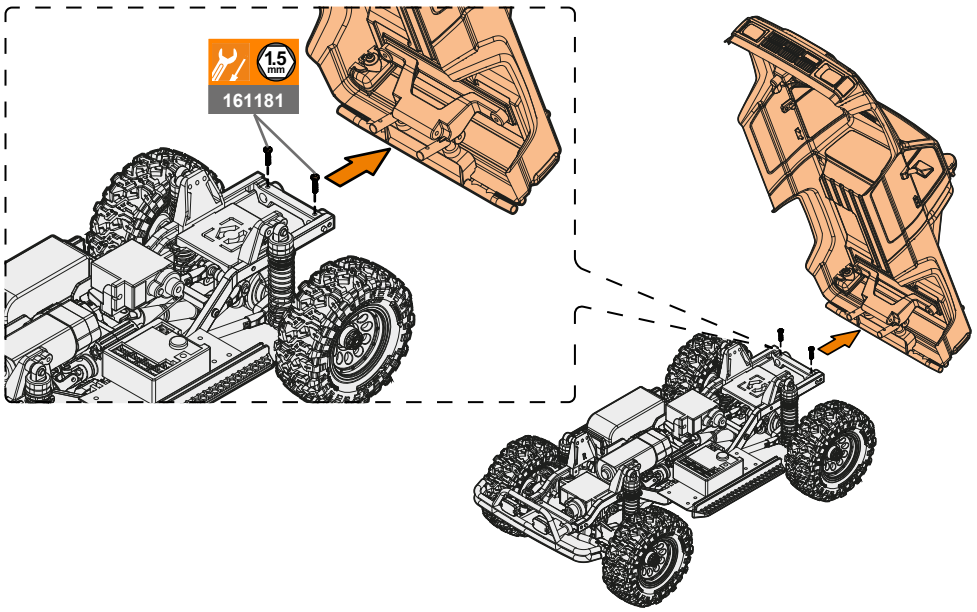

4

Examine the following screws for damage:

1. Steering knuckle screws.

2. Chassis screws.

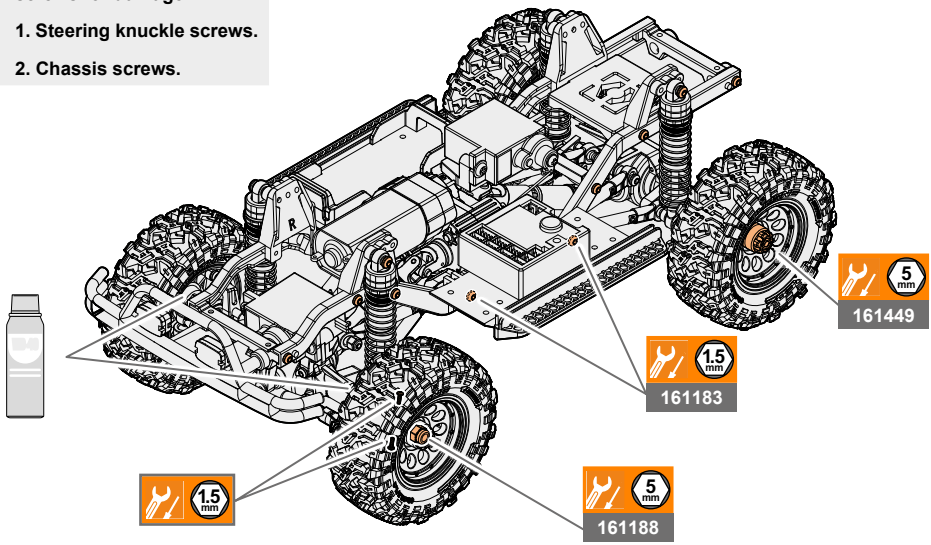

2-2 *Wheel Maintenance*

Make sure that the tires are securely attached to the wheels.

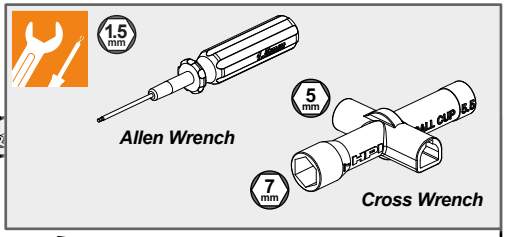

1

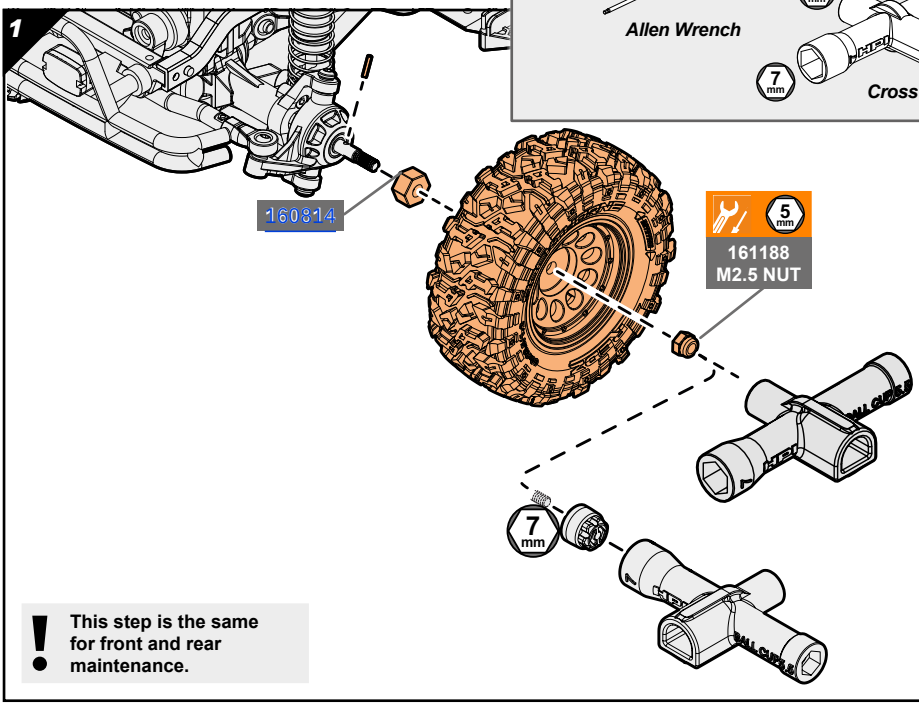

! **This step is the same for front and rear maintenance.**

2

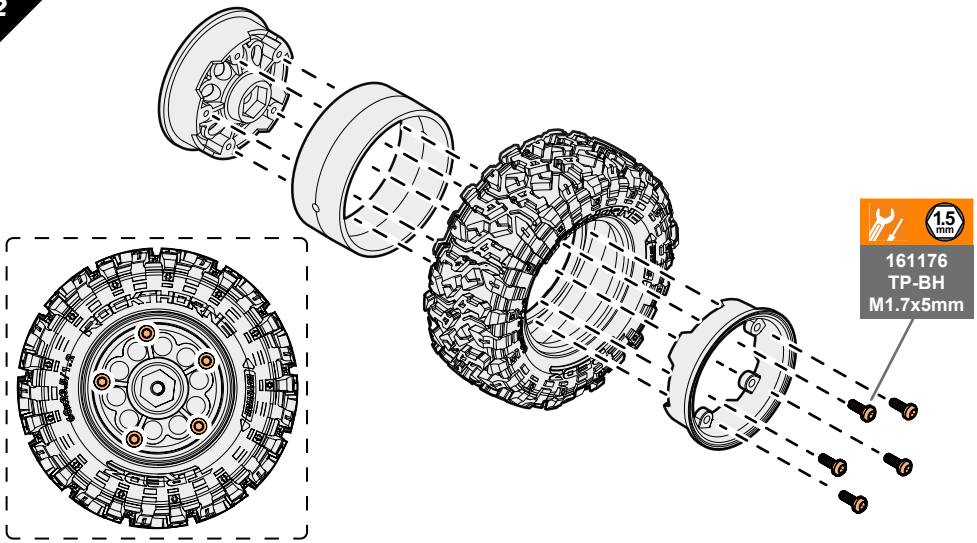

2-3 *Differential Maintenance*

Examine the gears for wear. Repair or replace worn gears as necessary.

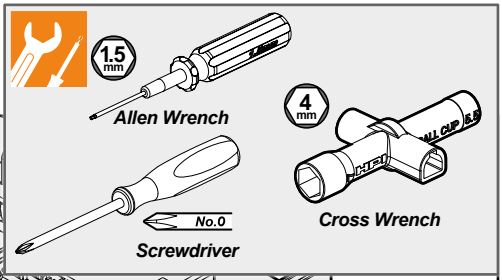

1

! This step is the same for left and right.

2

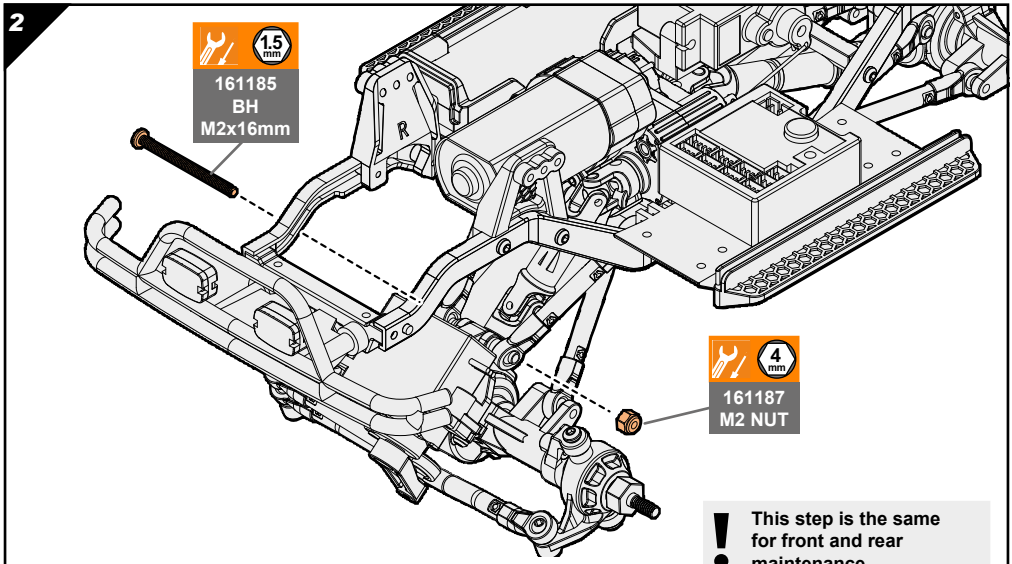

! This step is the same for front and rear maintenance.

3

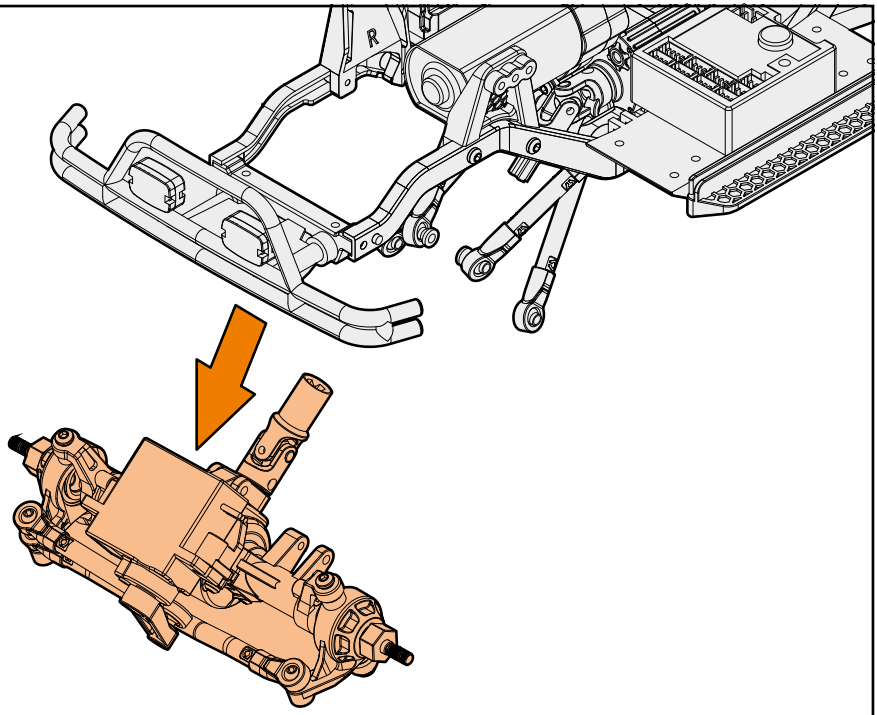

4

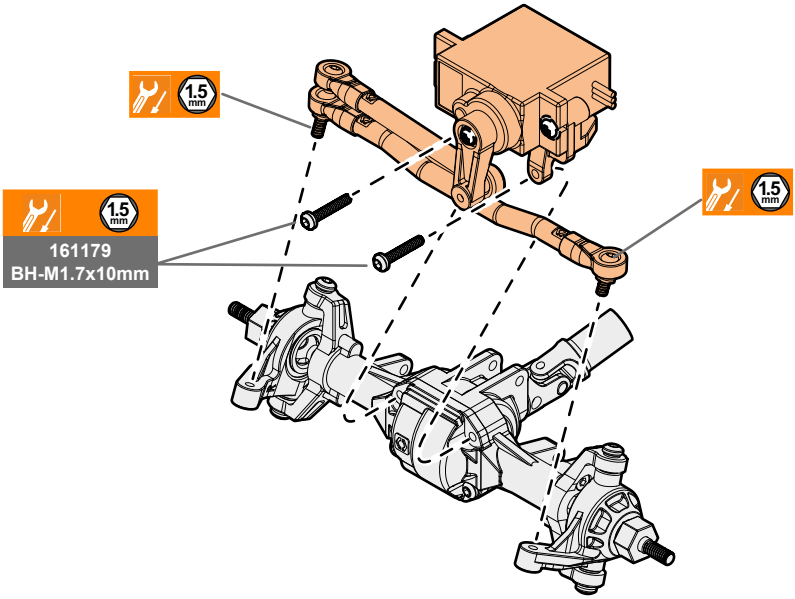

5

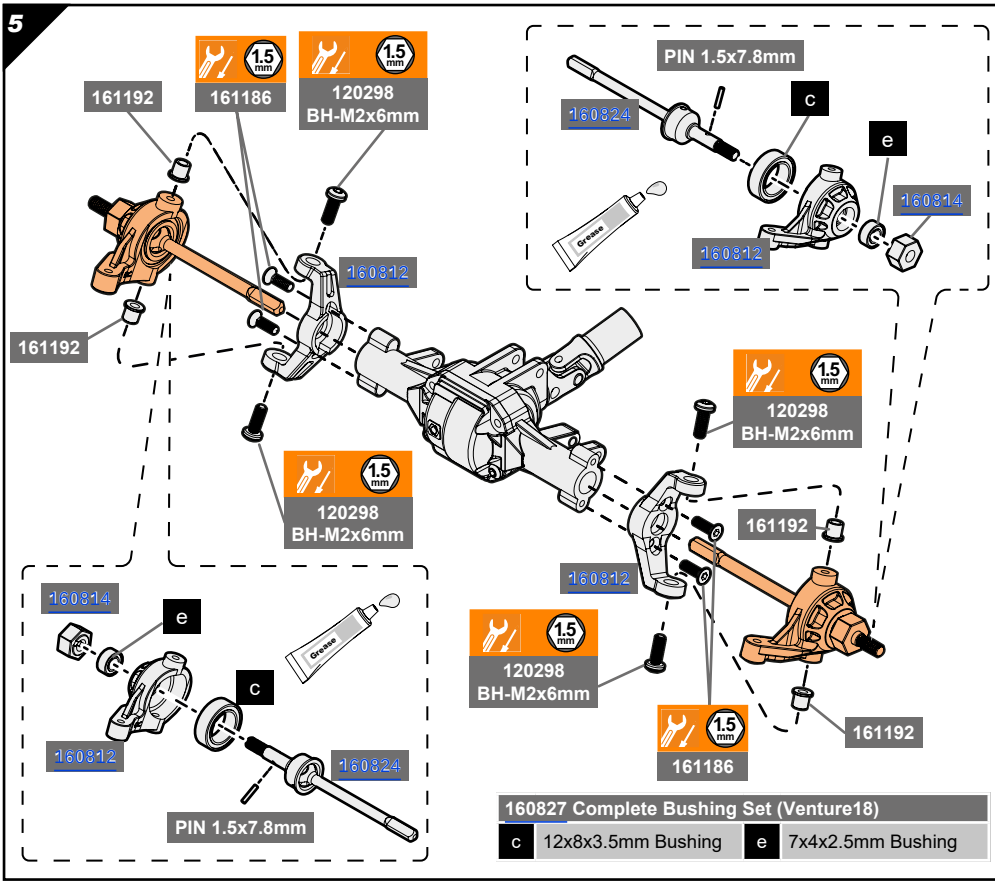

160827 Complete Bushing Set (Venture18)			
c	12x8x3.5mm Bushing	e	7x4x2.5mm Bushing

6

160827 Complete Bushing Set (Venture18)			
a	6x3x2.5mm Bushing	d	8x5x2.5mm Bushing

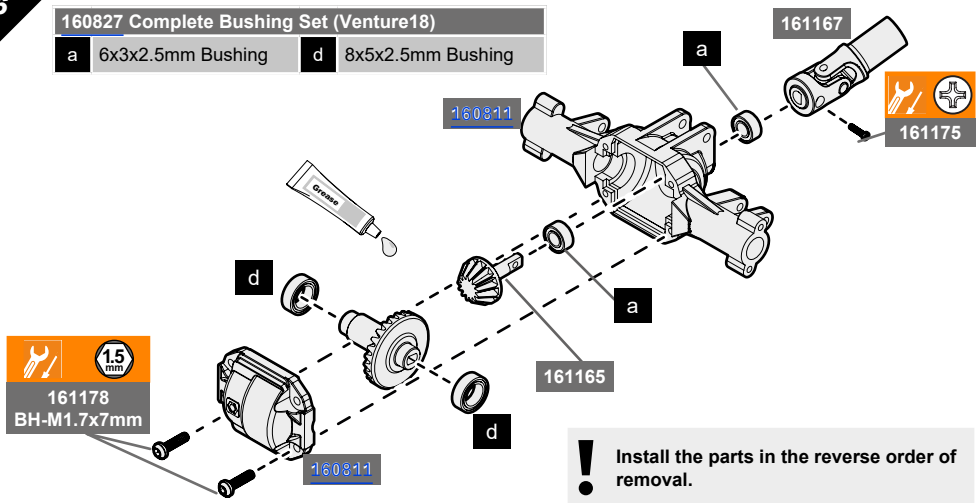

! **Install the parts in the reverse order of removal.**

2-4 *Transmission Maintenance*

Examine the gears for wear. Repair or replace worn gears as necessary.

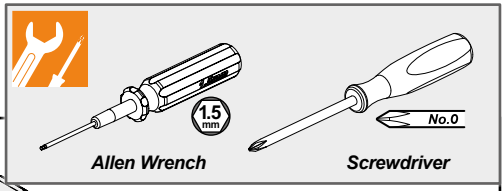

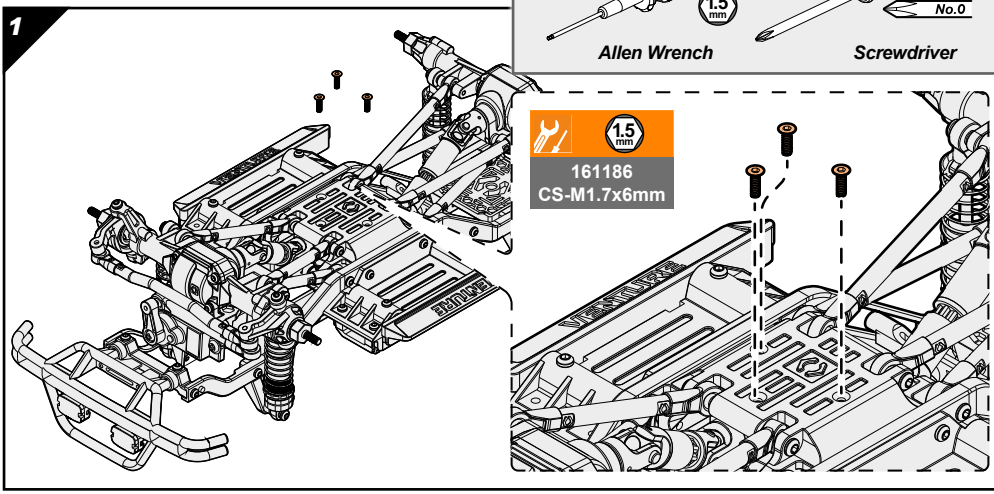

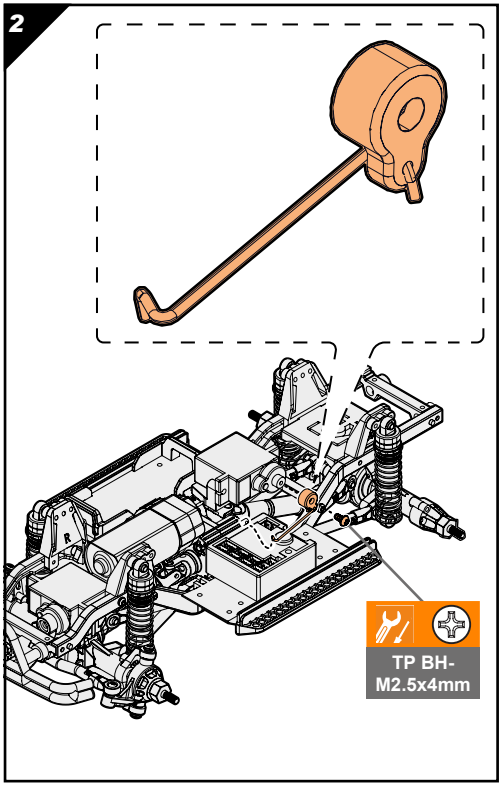

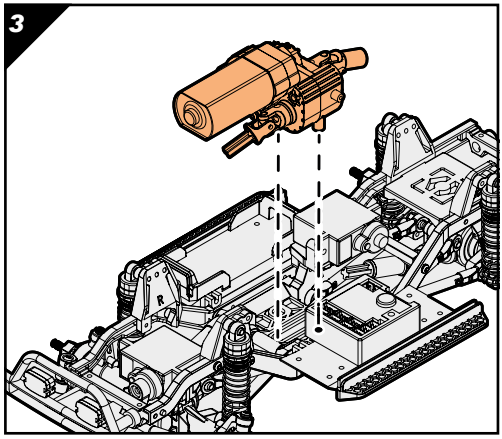

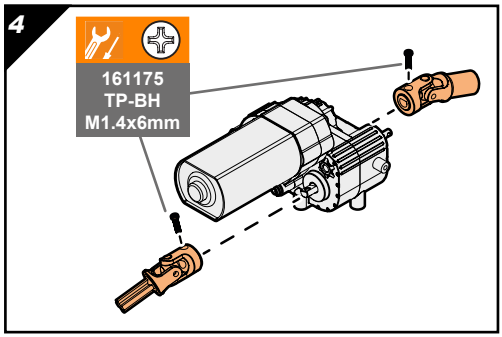

5

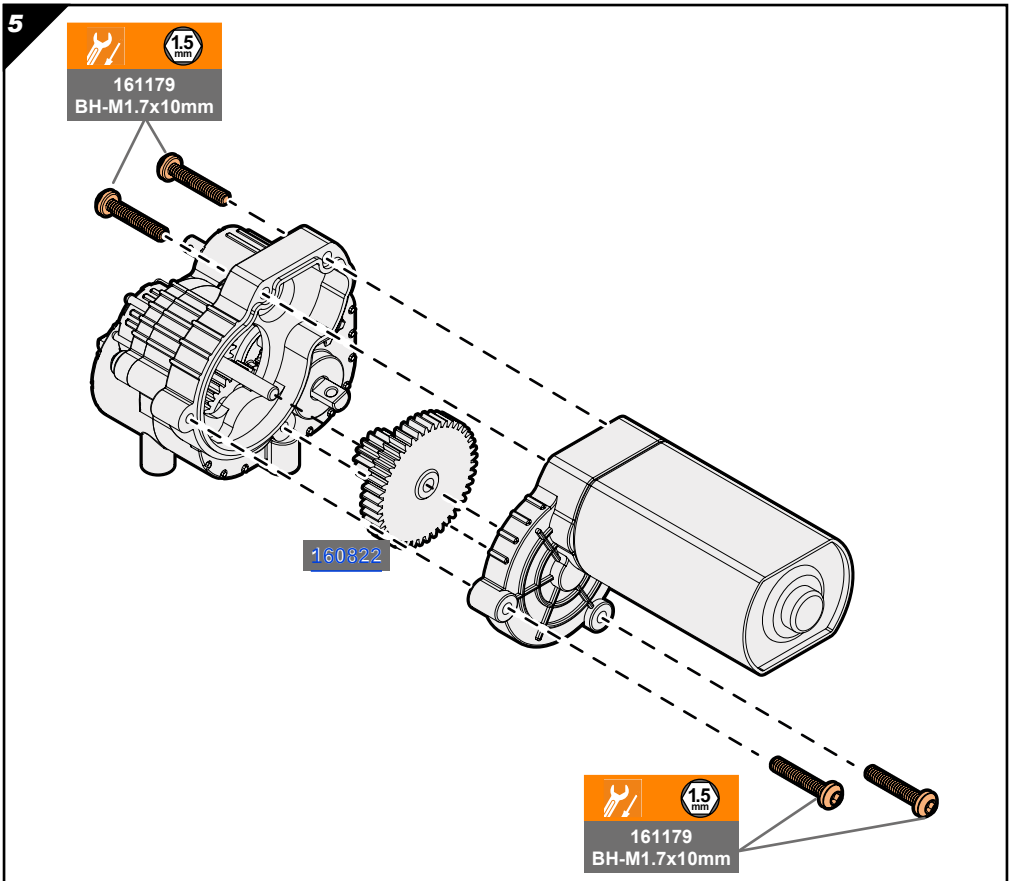
161179
BH-M1.7x10mm
160822
161179
BH-M1.7x10mm

6

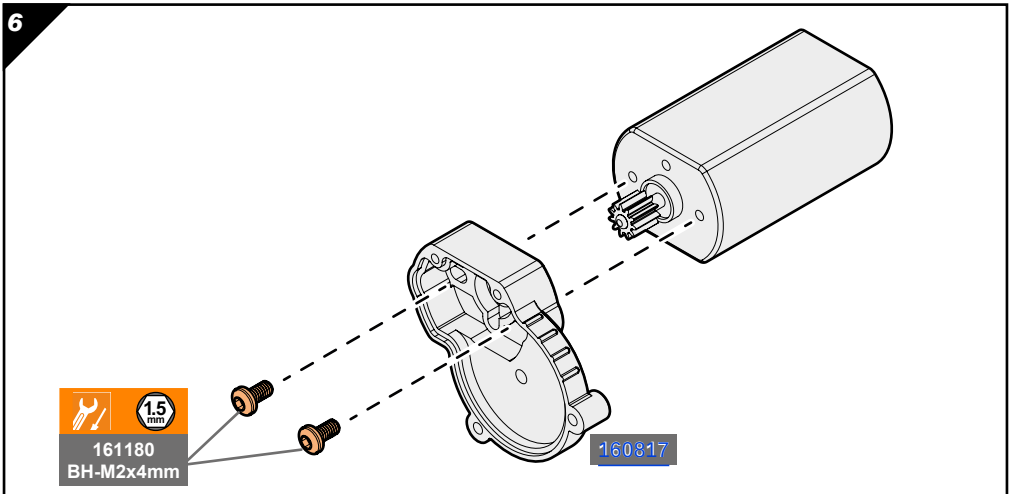
161180
BH-M2x4mm
160317

7

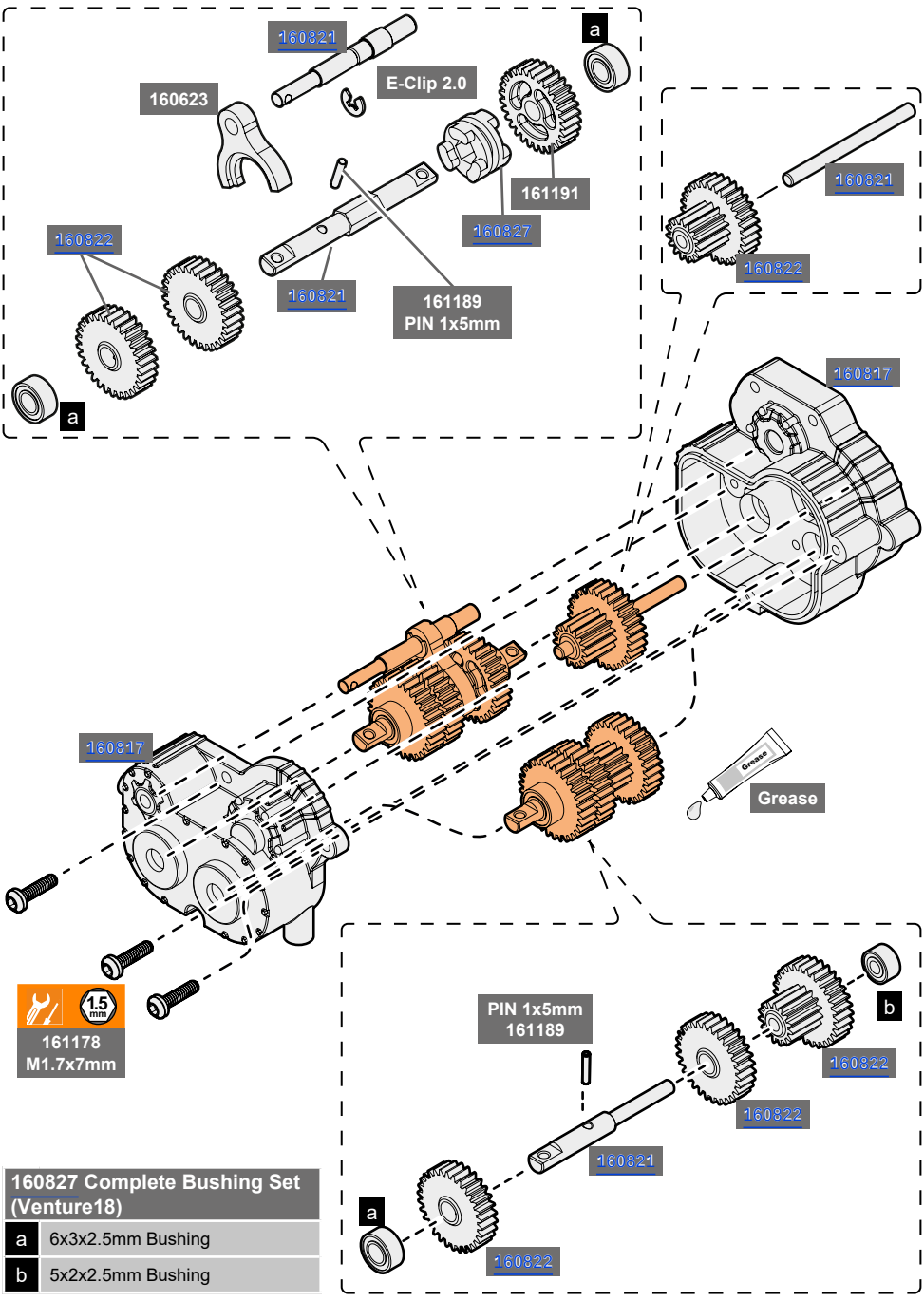

160827 Complete Bushing Set (Venture18)	
a	6x3x2.5mm Bushing
b	5x2x2.5mm Bushing

2-5 *Shock Maintenance*

Examine the shocks for oil leaks. Examine the shock shafts for bends. Repair or replace damaged parts as necessary.

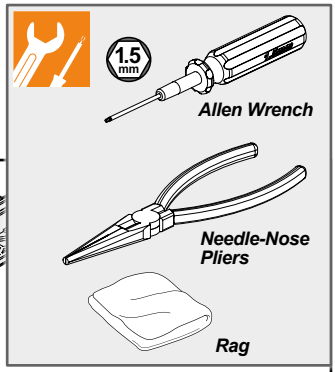

1

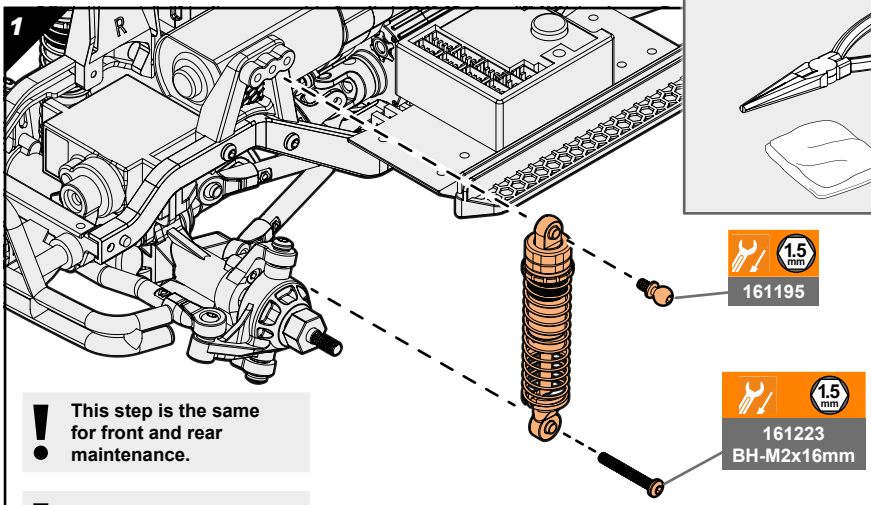

! This step is the same for front and rear maintenance.

! This step is the same for left and right.

2

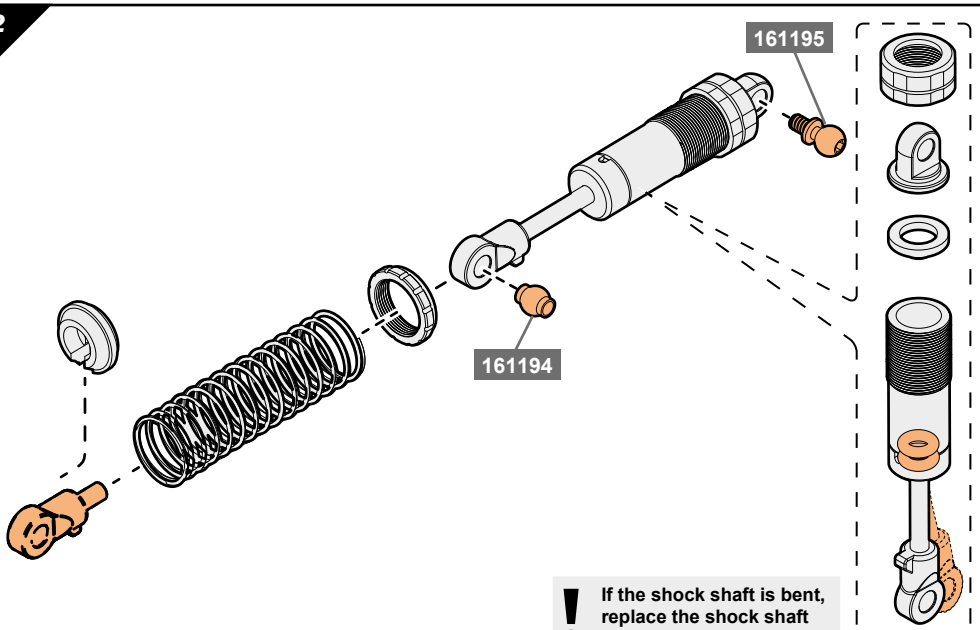

! If the shock shaft is bent, replace the shock shaft and the silicone O-rings.

3

If necessary, refill the shocks with oil (available separately). The original shock oil is equivalent to 100 cSt silicone oil.

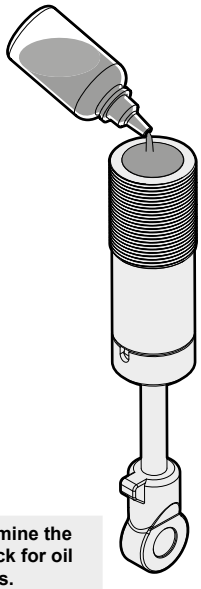

Examine the shock for oil leaks.

4

Remove excess oil with a rag. Move the shaft up and down slowly to remove all air bubbles.

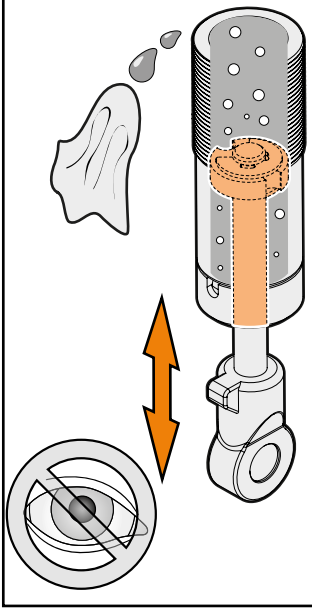

5

Compress the shock shaft fully to remove excess oil. This gives smooth shock movement after assembly.

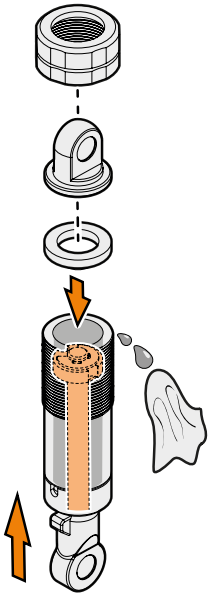

6

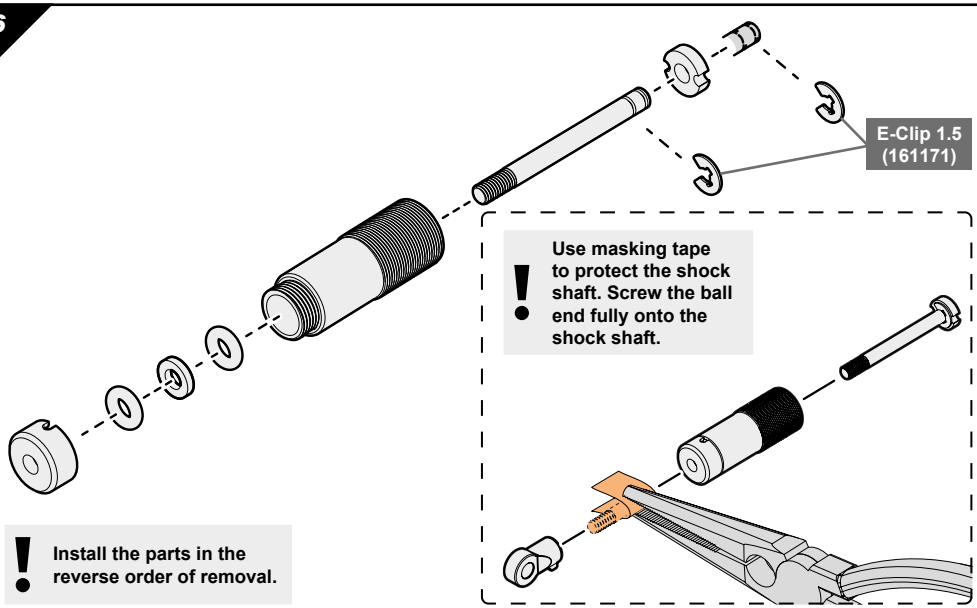

Use masking tape to protect the shock shaft. Screw the ball end fully onto the shock shaft.

Install the parts in the reverse order of removal.



HPI RACING A/S

www.hpiracing.com
HPI Racing A/S
Jegindøvej 21
DK - 8800 Viborg
Denmark
Email: info@hpiracing.com

Serial Number
Seriennummer
Numéro de série
シリアルナンバー

TG VENTURE 18

TOYOTA LAND CRUISER



- En Technical Guide
- De Technischer Leitfaden
- Fr Guide technique
- Es Guía Técnica
- Fi Tekninen Opas
- No Teknisk Veiledning
- Da Teknisk Vejledning
- Sv Teknisk Guide
- Pt Guia Técnico
- It Guida Tecnica
- Tr Teknik Kılavuz
- Ro Ghid Tehnic
- Pl Przewodnik Techniczny
- Cs Technický Průvodce
- Zh 技术指南
- Ja 技術ガイド

hpi racing

161450-006-TG

1

En: Further Information
De: Weitere Informationen
Fr: Informations complémentaires
Es: Más información
Fl: Lisätietoja
No: Mer informasjon
Da: Yderligere information
Sv: Mer information
Pt: Mais informações
It: Ulteriori informazioni
Tr: Daha fazla bilgi
Ro: Informații suplimentare
Pl: Dalsze informacje
Cs: Další informace
Zh: 更多信息
Ja: さらに詳しい情報

QS

En: Quick Start
De: Schnellstart
Fr: Démarrage rapide
Es: Inicio rápido
Fl: Pikakäynnistys
No: Rask oppstart
Da: Hurtig start
Sv: Snabbstart
Pt: Início rápido
It: Avvio rapido
Tr: Hızlı başlangıç
Ro: Pornire rapidă
Pl: Szybki start
Cs: Rychlý start
Zh: 快速入门
Ja: クイックスタート

TG

En: Technical Guide
De: Technischer Leitfaden
Fr: Guide technique
Es: Guía Técnica
Fl: Tekninen Opas
No: Teknisk Veiledning
Da: Teknisk Vejledning
Sv: Teknisk Guide
Pt: Guia Técnico
It: Guida Tecnica
Tr: Teknik Kılavuz
Ro: Ghid Tehnic
Pl: Przewodnik Techniczny
Cs: Technický Průvodce
Zh: 技术指南
Ja: 技術ガイド

SG

En: Startup Guide
De: Startanleitung
Fr: Guide de démarrage
Es: Guía de inicio
Fl: Käynnistysopas
No: Oppstartsguide
Da: Opstartsvejledning
Sv: Startguide
Pt: Guia de inicialização
It: Guida all'avvio
Tr: Başlangıç kılavuzu
Ro: Ghid de pornire
Pl: Przewodnik startowy
Cs: Průvodce spuštěním
Zh: 入门指南
Ja: スタートアップガイド

RM

En: Radio Manual
De: Radiohandbuch
Fr: Manuel de la radio
Es: Manual de radio
Fl: Radiokäyttöopas
No: Radiobruksanvisning
Da: Radiobrugervejledning
Sv: Radiomanual
Pt: Manual do rádio
It: Manuale della radio
Tr: Radyo kılavuzu
Ro: Manual de utilizare radio
Pl: Instrukcja obsługi radia
Cs: Návod k použití rádia
Zh: 接收器说明书
Ja: 送信機取扱説明書

EM

En: ESC Manual
De: ESC-Handbuch
Fr: Manuel ESC
Es: Manual ESC
Fl: ESC-käsikirja
No: ESC-manual
Da: ESC-manual
Sv: ESC-manual
Pt: Manual ESC
It: Manuale ESC
Tr: ESC Kılavuzu
Ro: Manual ESC
Pl: Instrukcja ESC
Cs: Manuál ESC
Zh: 电调手册
Ja: ESC取扱説明書

UG

En: User Guide
De: Benutzerhandbuch
Fr: Guide de l'utilisateur
Es: Guía del usuario
Fl: Käyttöopas
No: Brukerhåndbok
Da: Brugervejledning
Sv: Användarhandbok
Pt: Guia do utilizador
It: Guida utente
Tr: Kullanıcı Kılavuzu
Ro: Ghid de utilizare
Pl: Instrukcja użytkownika
Cs: Uživatelská příručka
Zh: 用户指南
Ja: ユーザーガイド

En: Scan Me
De: Scanne mich
Fr: Scanne-moi
Es: Escanéame
Fl: Skannaa minut
No: Skann meg
Da: Scan mig
Sv: Skanna mig
Pt: Escaneie-me
It: Scansionami
Tr: Beni Tara
Ro: Scanează-mă
Pl: Przeskanuj mnie
Cs: Naskenuj mě
Zh: 扫描二维码
Ja: スキャンして

2

En: Parts List
De: Stückliste
Fr: Nomenclature
Es: Liste des pièces
Fl: Osaluettelo
No: Reservedelsliste
Da: Deleliste
Sv: Reservdelslista
Pt: Lista de peças
It: Elenco dei componenti
Tr: Parça Listesi
Ro: Listă de piese
Pl: Lista części
Cs: Seznam dílů
Zh: 零件清单
Ja: 部品表

Parts #	Description
120298	Button Head Screw M2x6mm (10pcs)
160810	Chassis Rail Set
160811	Axle Housing Set
160812	Steering Spindle & Hub Set
160813	Shock Tower & Chassis Brace Set
160814	Servo Mount Set
160815	Skid Plate & Battery Mount Set
160816	Suspension Link Set
160817	Centre Transmission Gear Box Set
160818	Centre Drive Shaft Set
160820	Differential Spool/Input Gear Set (28/11T)
160821	Centre Gear Box Shaft Set
160822	Transmission Gear Set
160823	Gear Shift Linkage Set
160824	Front CVD Drive Shaft Set
160825	Rear Drive Shaft Set
160826	Complete Suspension Bushing & Pin Set (Venture18)
160827	Complete Bushing Set (Venture18)
160828	Complete Hardware Set (Venture18)
160829	Battery Strap
160830	HPI TF-706 6Ch Transmitter
160831	HPI RF-706 6Ch Receiver
160832	HPI SRL-706 3-in1 ESC/RX/LED Controller
160833	HPI SD-01WR Micro Servo (6.0V/1kg/Plastic Geared)
160834	Micro Crawler Motor 55T (180 Size)
160837	Female JR to Male PicoBlade Servo Adaptor
160838	Plazma 7.4V 600mAh 10C LiPo Battery Pack
160839	7.4V USB LiPo Balance Charger
160860	HPI SD-02MGWR Micro Servo (6.0V/1.5kg/Metal Geared)
160861	RL-700 LED Light Control Unit
160862	FLX18-1621-3500KV Outrunner Brushless Motor
160864	Oil-Filled Shock Set V2 (Assembled/4pcs)
160865	Tredz Trailblaster Tire 64x23/1.2in (4pcs)
160878	Pinion Gear 11T (0.4M / 2mm)
160967	FLX18-3S20-WP-T Flux ESC with XT-30
161171	Shock Rebuild Set
161175	TP. Button Head Screw M1.4x6mm (10pcs)
161176	TP. Button Head Screw M1.7x5mm (Hex Socket/10pcs)
161177	Button Head Screw M1.7x5mm (Hex Socket/10pcs)
161178	Button Head Screw M1.7x7mm (Hex Socket/10pcs)

Parts #	Description
161179	Button Head Screw M1.7x10mm (Hex Socket/10pcs)
161180	Button Head Screw M2x4mm (Hex Socket/10pcs)
161182	Button Head Screw M2x10mm (Hex Socket/10pcs)
161184	Button Head Screw M2x16mm (Hex Socket/10pcs)
161185	Button Head Screw M2x26mm (Hex Socket/10pcs)
161186	Flat Head Screw M1.7x6mm (Hex Socket/10pcs)
161187	Lock Nut M2 (Black/4pcs)
161188	Lock Nut M2.5 (Black/4pcs)
161189	Pin 1x5mm (Hex Socket/10pcs)
161190	Pin 1.5x6mm (Hex Socket/10pcs)
161191	M3x5x0.2 Shim (10pcs)
161192	Top Hat Bushing 4x3.4mm (4pcs)
161193	Pivot Ball 4x6.8mm (10pcs)
161194	Pivot Ball 4x4.8mm (10pcs)
161195	Ball Stud 4x8mm (10pcs)
161196	Double Ball Stud 4x14mm (2pcs)
161238	Shock Spring 10x33x0.6mm 14.5 Coils (Medium)
161449	CM-10 Beadlock Wheel 1.2in (Black/4pcs)
161454	Toyota Land Cruiser LC250 Painted Body Heritage Blue
161455	Toyota Land Cruiser LC250 Painted Body Trail Dust
161456	Toyota Land Cruiser LC250 Clear Body
161457	Bumper and Grille Set
161458	Tailgate & Side Rail Set
161459	Dashboard & Wing Set
161460	LC250 Body Accessory Set
161461	Roof Rack Set
161462	Canopy Set
161463	Roof Light Set
161464	LC250 Lens Set
161745	Venture18 Roof Light LED Kit Type3
161746	Venture18 LED Kit Type2 (PicoBlade)
161747	Venture18 LED Kit Type2 (JR)
161748	Button Head Screw M1.2x4mm (10pcs)
161749	Button Head Screw M1.4x4mm (10pcs)

3

En: Exploded Views
De: Explosionszeichnung
Fr: Vue éclatée
Es: Vista explosionada
Fl: Räjäytyskuva
No: Sprengskisse
Da: Eksploderet visning
Sv: Exploderad vy
Pt: Vista explodida
It: Vista esplosa
Tr: Patlatılmış Görünüm
Ro: Vedere explodată
Pl: Widok rozłożony
Cs: Rozložený pohled
Zh: 爆炸图
Ja: 分解図

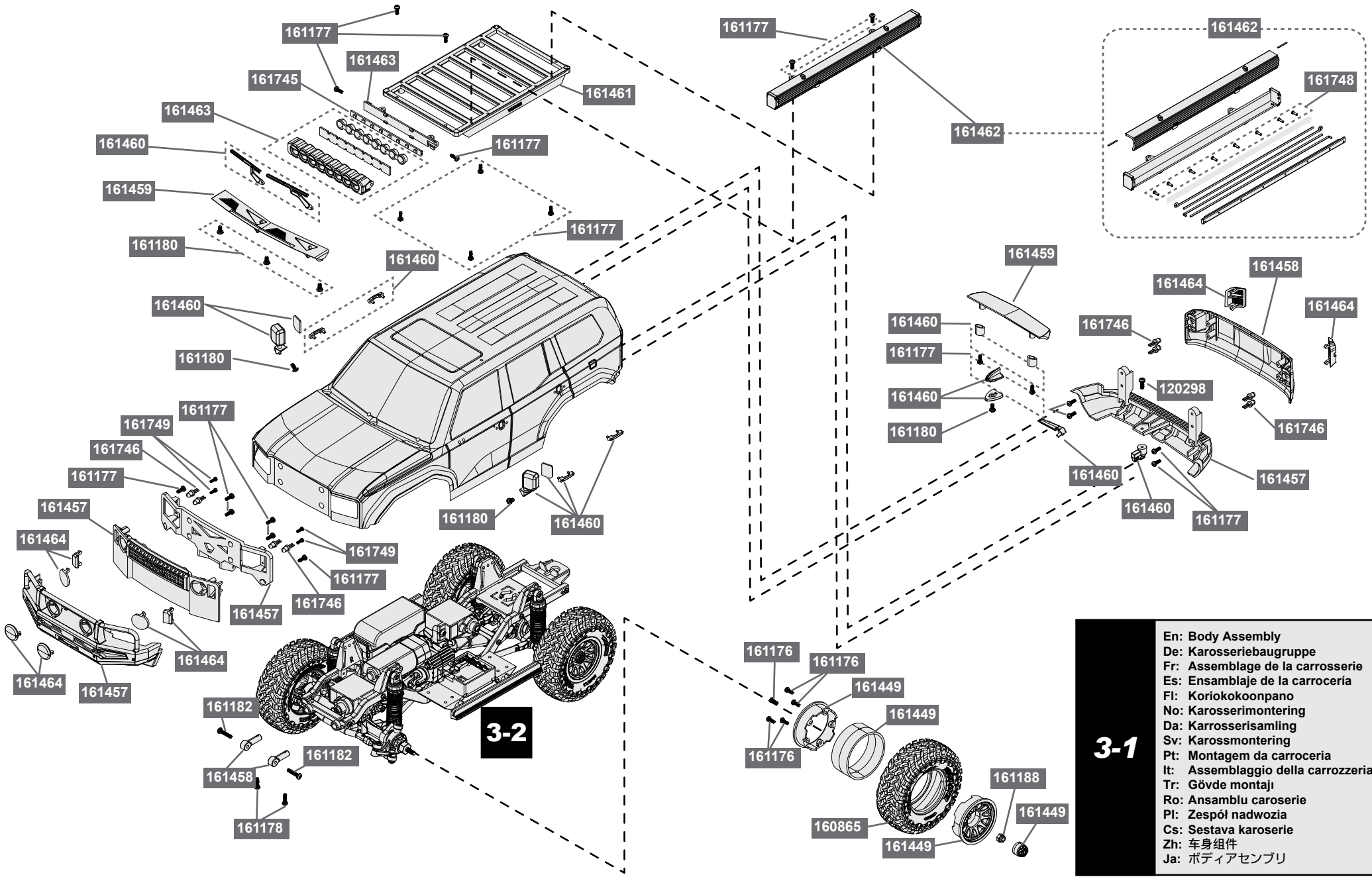

En: Body Assembly
De: Karosseriebaugruppe
Fr: Assemblage de la carrosserie
Es: Ensamblaje de la carrocería
Fl: Koriokokoonpano
No: Karosserimontering
Da: Karrosserisamling
Sv: Karossmontering
Pt: Montagem da carroceria
It: Assemblaggio della carrozzeria
Tr: Gövde montajı
Ro: Ansamblu caroserie
Pl: Zespół nadwozia
Cs: Sestava karoserie
Zh: 车身组件
Ja: ボディアセンブリ

3-2

En: Main Components
De: Hauptkomponenten
Fr: Composants principaux
Es: Componentes principales
Fl: Pääkomponentit
No: Hovedkomponenter
Da: Hovedkomponenter
Sv: Huvudkomponenter
Pt: Componentes principais
It: Componenti principali
Tr: Ana bileşenler
Ro: Componente principale
Pl: Główne komponenty
Cs: Hlavní komponenty
Zh: 主要组件
Ja: 主要部品

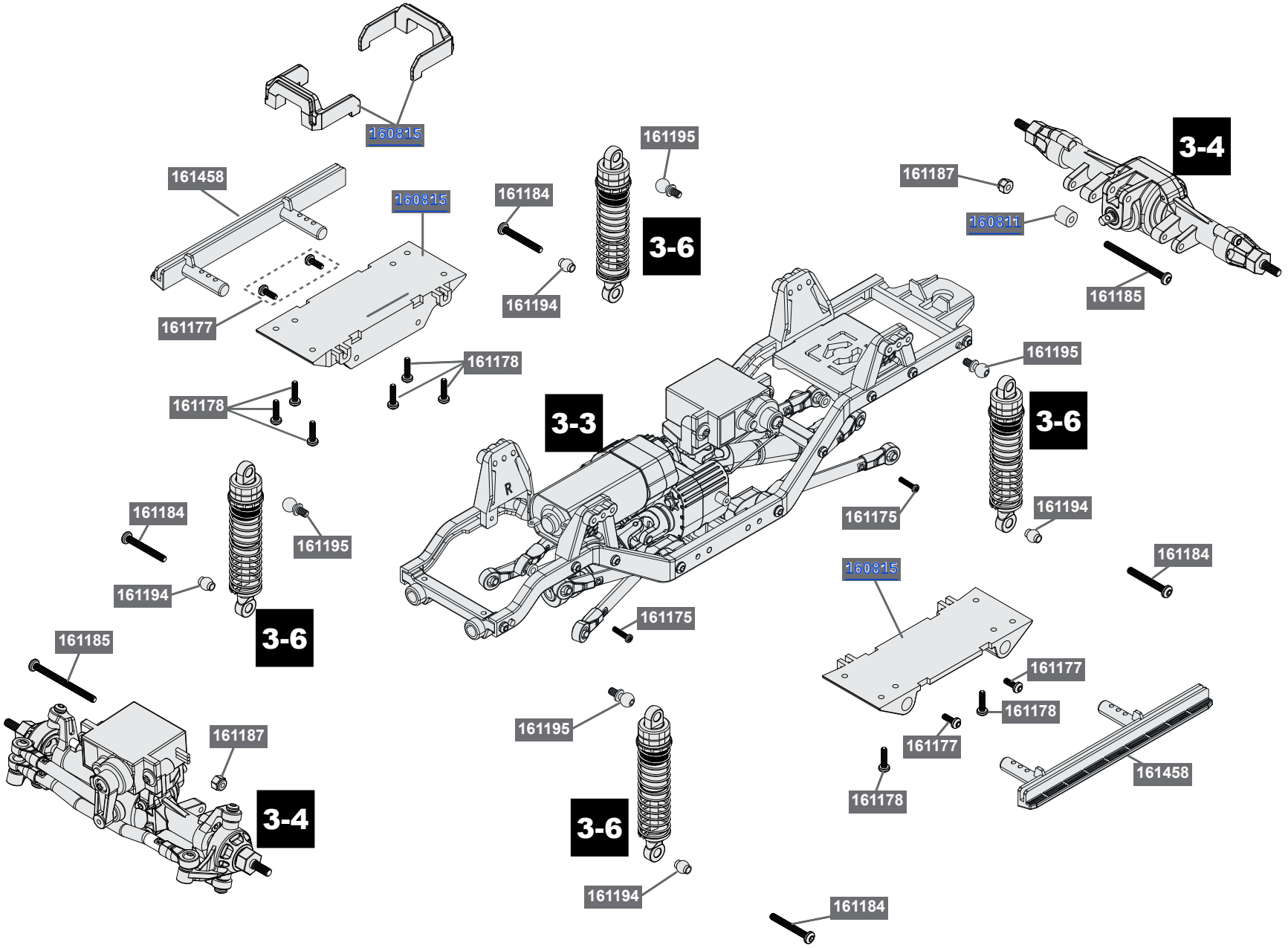

3-3

En: Chassis Assembly	Fl: Alustan kokoonpano	Pt: Montagem do chassi	Pl: Montaż podwozia
De: Fahrgestellmontage	No: Chassismontering	It: Assemblaggio del telaio	Cs: Montáž podvozku
Fr: Assemblage du châssis	Da: Chassis samling	Tr: Şasi montajı	Zh: 底盘组装
Es: Montaje del chasis	Sv: Chassimontering	Ro: Asamblare șasiu	Ja: シャーシ組立

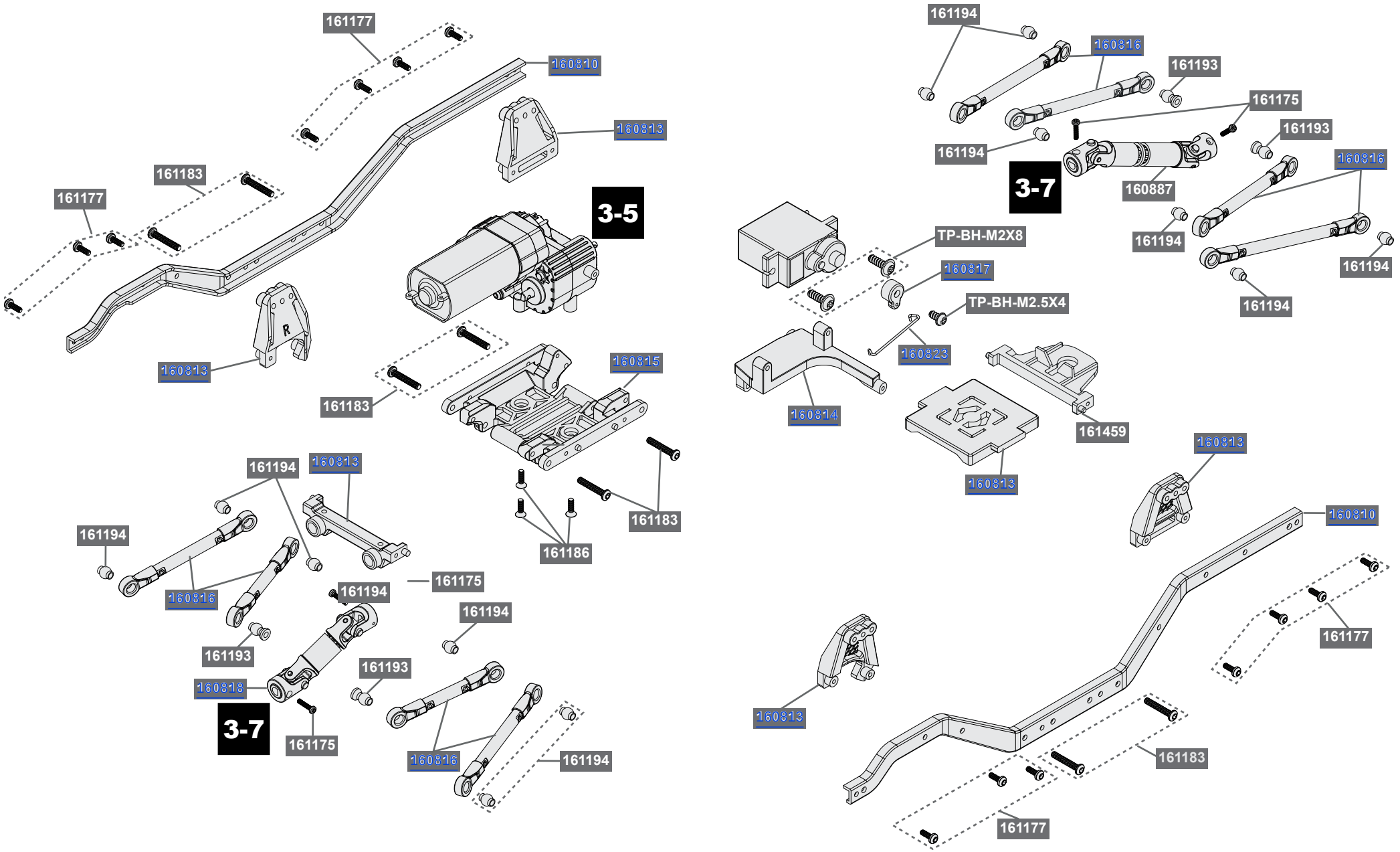

3-4

En: Front/Rear Assembly
De: Vorder-/Hinterbau
Fr: Assemblage avant/arrière
Es: Montaje delantero/trasero
Fl: Etu-/takaosa
No: For-/bakmontering
Da: For-/bagmontering
Sv: Fram-/bakmontering
Pt: Montagem frontal/traseira
It: Assemblaggio anteriore/posteriore
Tr: Ön/arka montajı
Ro: Ansamblu față/spate
Pl: Montaż przedni/tylny
Cs: Přední/zadní sestava
Zh: 前/后组件
Ja: 前部/後部アセンブリ

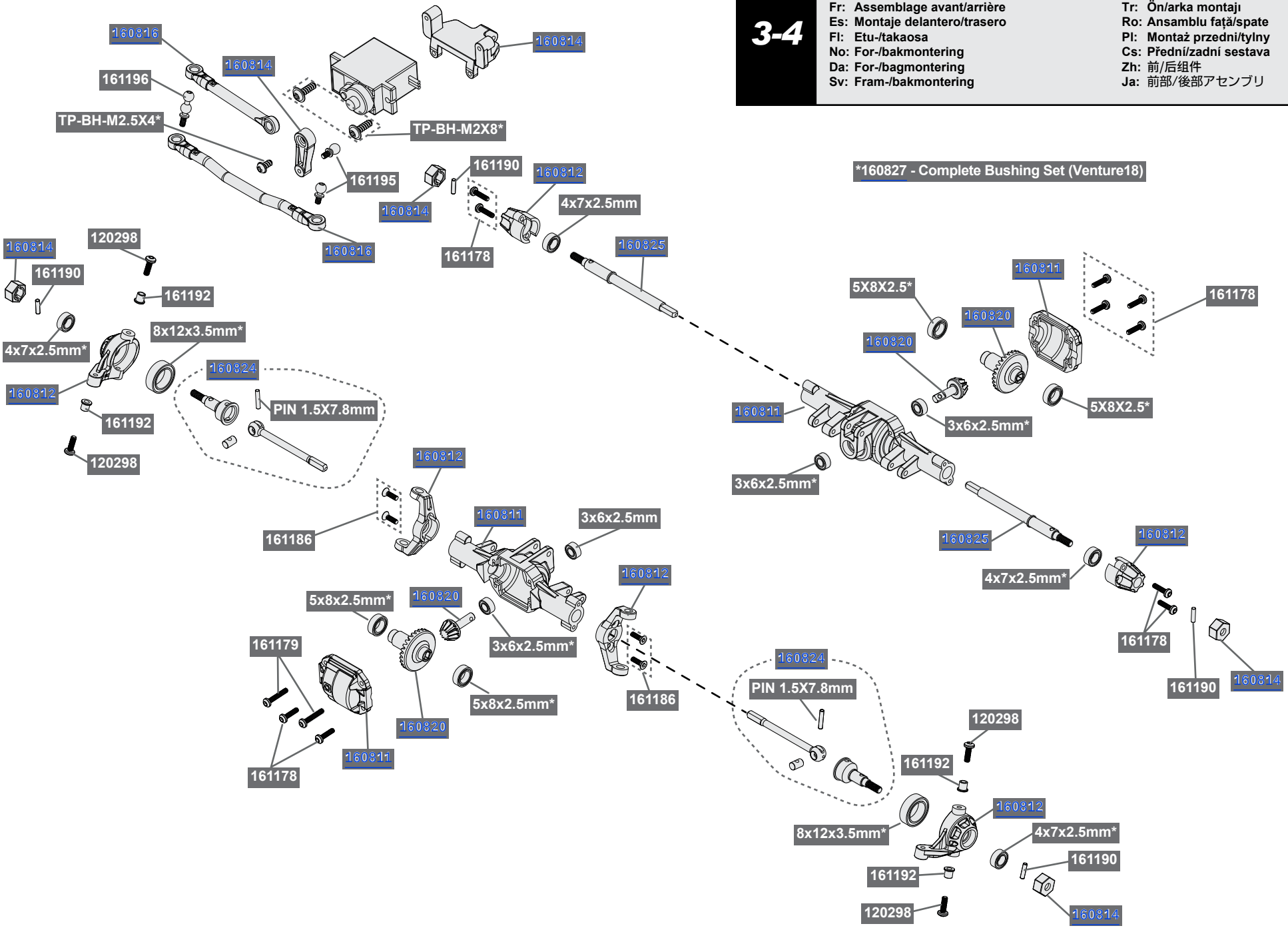

3-5

En: Transmission Assembly	Fl: Vaihteiston kokoonpano	Pt: Montagem da transmissão	Pl: Zespół skrzyni biegów
De: Getriebeeinheit	No: Girkassemontering	It: Assemblaggio della trasmissione	Cs: Sestava převodovky
Fr: Assemblage de transmission	Da: Gearkassemontering	Tr: Şanzıman montajı	Zh: 变速器组件
Es: Montaje de transmisión	Sv: Växellådsmontering	Ro: Ansamblu transmisie	Ja: トランスミッションアセンブリ

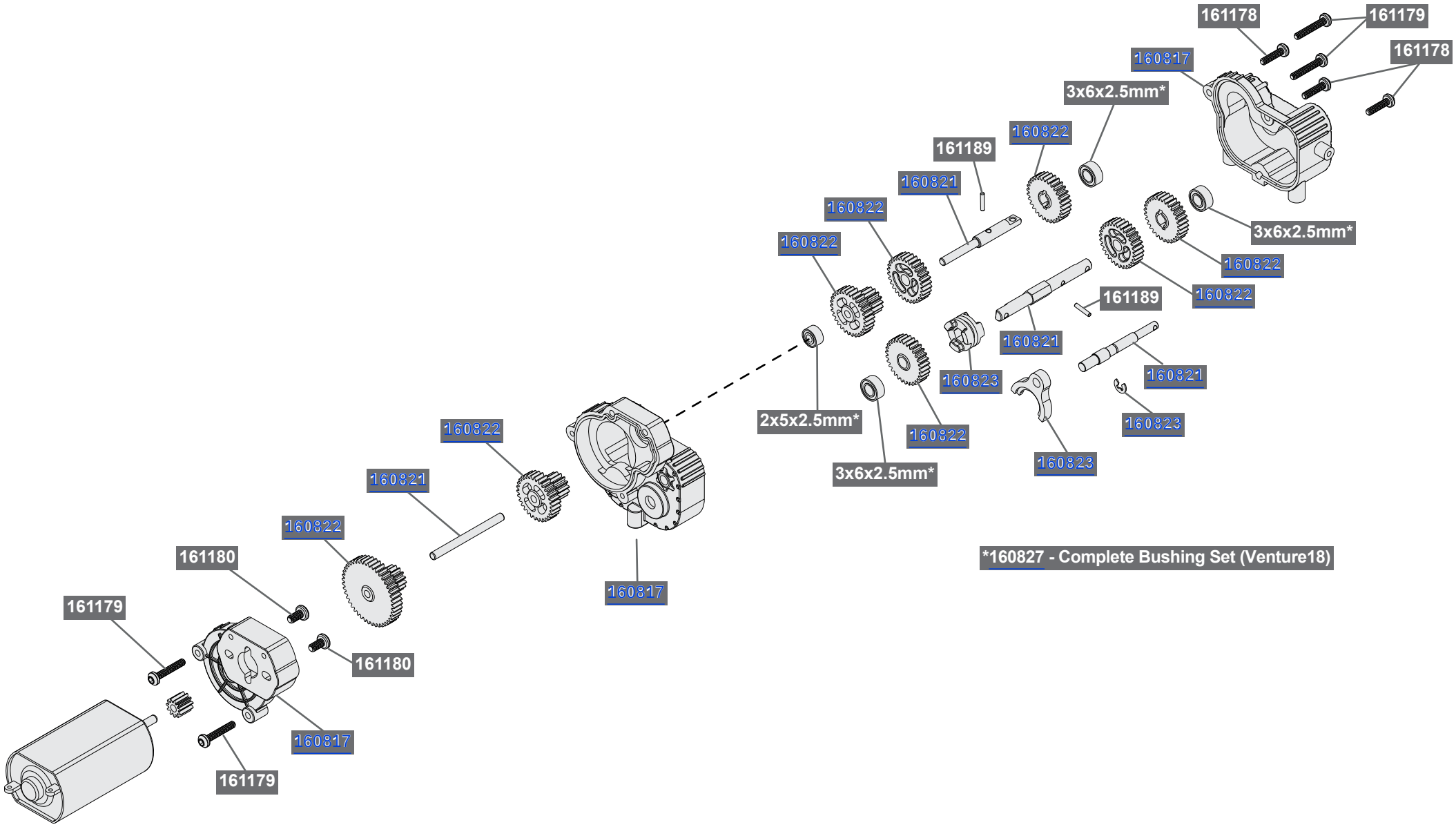

3-6

En: Shock Assembly
De: Stoßdämpfer-Montage
Fr: Assemblage de l'amortisseur
Es: Montaje del amortiguador
Fl: Iskunvaimennin kokoonpano
No: Støtdempermontering
Da: Støddæmper samling
Sv: Stötdämparmontering
Pt: Montagem do amortecedor
It: Assemblaggio dell'ammortizzatore
Tr: Amortisör montajı
Ro: Asamblare amortizor
Pl: Montaż amortyzatora
Cs: Montáž tlumiče
Zh: 缓冲器组装
Ja: ショックアセンブリ

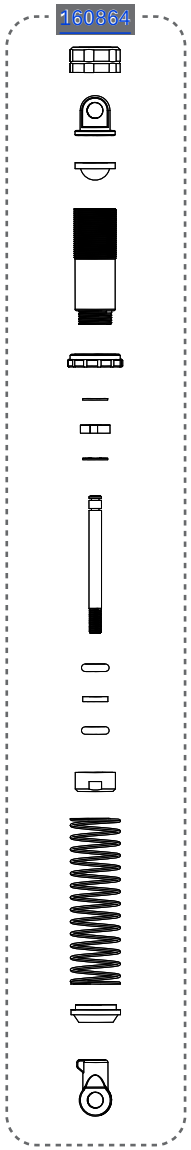

3-7

En: Driveshaft Assembly
De: Antriebswellen-Montage
Fr: Assemblage de l'arbre de transmission
Es: Montaje del eje de transmisión
Fl: Vetoakselin asennus
No: Montering av drivaksel
Da: Samling af drivaksel
Sv: Montering av drivaxel
Pt: Montagem do veio de transmissão
It: Assemblaggio dell'albero di trasmissione
Tr: Tahrik mili montajı
Ro: Asamblarea arborelui de transmisie
Pl: Montaż wału napędowego
Cs: Montáž hnací hřídele
Zh: 传动轴组装
Ja: ドライブシャフトの組み立て

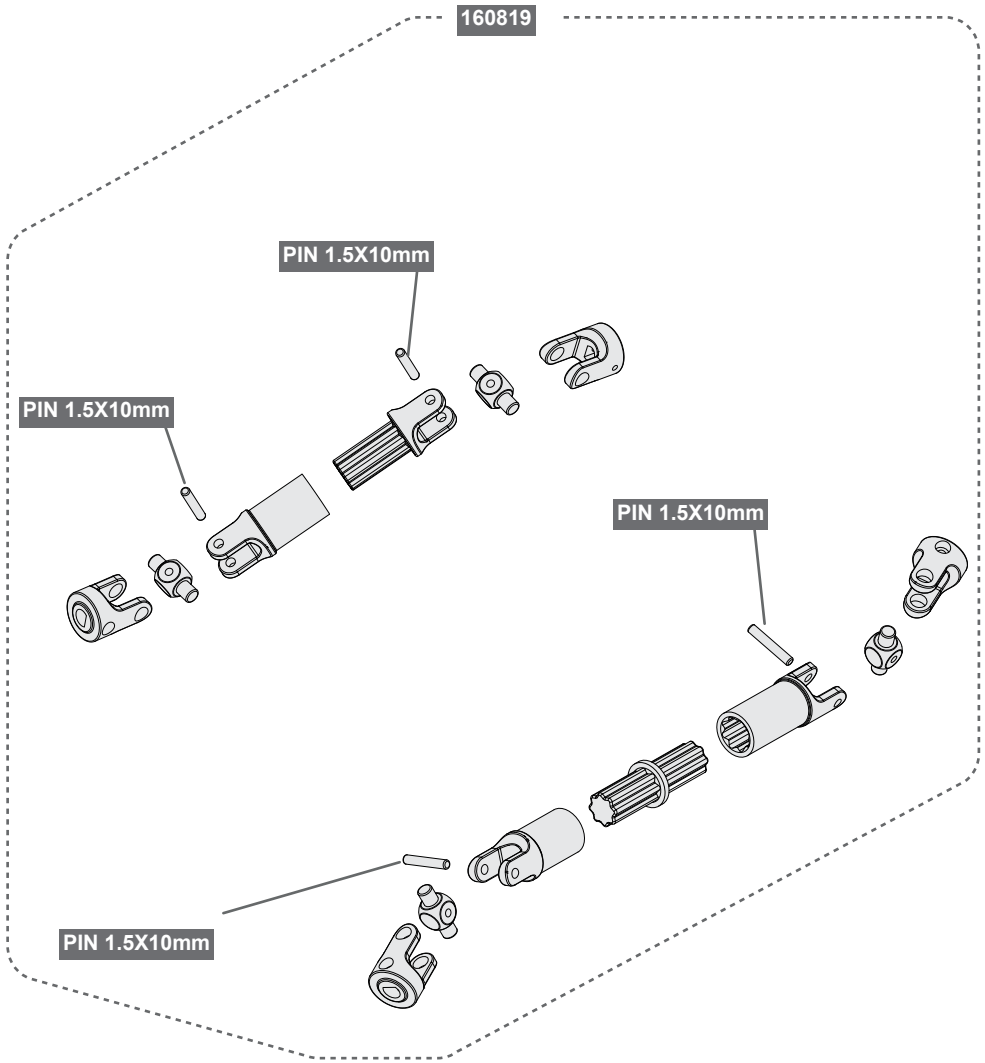



HPI RACING A/S

www.hpiracing.com
HPI Racing A/S
Jegindøvej 21
DK - 8800 Viborg
Denmark
Email: info@hpiracing.com

Serial Number
Seriennummer
Numéro de série
シリアルナンバー