No.14208

14+

HYPER GO

1:14 RC HIGH SPEED CAR USER MANUAL

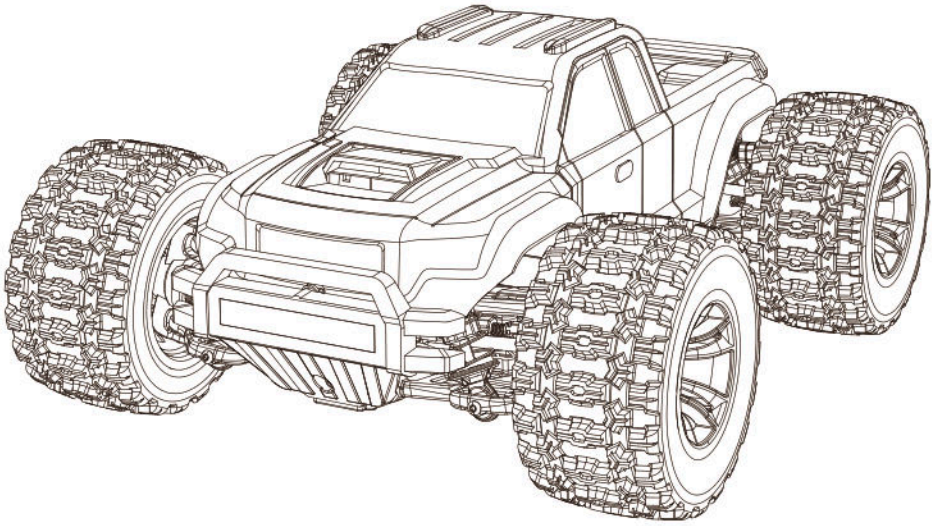

4WD REMOTE CONTROL

The instruction sheet for this product is just for your reference. We reserve the right to make changes or adjustments on the product without prior notification. Please refer to the official information.

Warning:

Choking hazard! This product contains small parts. NOT suitable for children under 3 years. Contains electrical components and should be kept dry at all times. Regularly check the battery charger wires, plugs and shell and other components for damage. DO NOT use if any part is damaged.

Warnings & Cautions

1. Detachable small parts should be stored safely and out of reach of children.
2. If interference is experienced, turn the model off and try it again in a different area.
3. Transmitter will not function correctly if the batteries are low. Please replace the batteries.
4. Please discard old/used batteries in a safe manner. Consider your environment!
5. Please store the remote control model in cool, dry place.
6. DO NOT expose to fire or high temperatures, do not store in moist place.
7. Once the battery get wet, wipe immediately with a soft dry cloth.
   If the battery any deformation, please stop using.
8. If you don't use the model for a long time, please raise the chassis to let the wheels hang in the air.

Precautions for Battery Use

1. Transmitter uses 4x1.5V "AA" batteries.
2. Please pay attention to correct polarity when replacing batteries.
3. Rechargeable batteries should be charged under adult supervision.
4. Do not mix old and new batteries. Do not mix alkaline, standard (carbon-zinc), or rechargeable batteries.
5. After the battery is exhausted, the model should be removed.
6. Exhaust battery should be safety dispose!
7. DO NOT short circuit any terminals.
8. DO NOT attempt to recharge non rechargeable batteries.
9. Remove batteries from the model when charging.
10. DO NOT put batteries into a fire or into water.
11. The rated input voltage battery charger MUST be suitable for your mains power voltage.
12. During charging it is quite normal for the charger and batteries to heat up.
13. Do not swallow battery!
14. Store only in cool, dry and dark places and should be keep out of the children!
15. When the battery leaks the liquid and let it into you eyes, please right away rinse them and consult an ophthalmologist.

Safety Precautions

- It is a radio control model, not a toy!
- In order to enjoy running the car, you need to finish assembly before operation. Do routine maintenance work after operation. Replacement parts and option parts are available separately.
- Improper usage with Alkaline cells or rechargeable batteries may damage the electronics for the car or the radio.

In order to operate the car safely. Be sure that you have observed the following points:

⚠ Please follow the points as below in order to prevent accident from happening to the car and people.



●Be sure to read thoroughly the manual before you begin. Fresh user should seek advice from people having rich experience in order to assemble the model correctly.



●Cutters, nippers and screwdrivers need careful handling.



●As the product contains small and sharp parts, assemble and store this product only in places out of the reach of children.

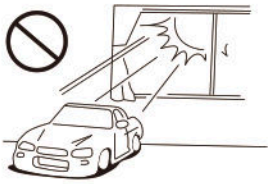

●Do not expose this model to high temperature, humidity or direct sunlight.

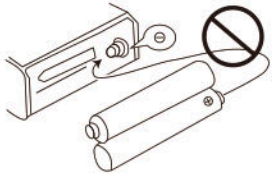

●Never reverse connection/ disassemble the battery. This may lead to damage and leakage.

●When the model is not in use, always turn off the receiver and transmitter. Further more, disconnect the batteries and remove them from the model and the transmitter. This may be dangerous such as overheat and leakage.

Operating Your Model Safely

⚠ Do NOT operate the model in the following places and situations. (Non-observance may lead to accident!)

●Operate your model in spacious and safe areas! Do not operate it:

1. On road!
2. In places where children and many people gather.
3. In residential districts and parks!
4. Do not operate the model on public roads, in crowded places and near infant as it may cause accidents.
5. Indoors and in limited space! Non-observance may result in personal injury and property damage!

●The car must stop immediately and check for the reasons when it is operating abnormal. As long as the problem is not cleared, do NOT operate it! This may lead to further trouble and unforeseen accidents!

●Always check the radio batteries! With weak dry batteries, transmission and reception of the radio would fall off. You may lose control of your model in such condition. This may also cause serious accidents!

●Keep in mind that people around you may also operate a radio control model! NEVER share the same frequency with somebody else at the same time! Otherwise, Radio signals will be mixed up and you will lose control to your model. This may lead to accidents.

●Do NOT put fingers or any objects inside rotating and moving parts!

●Right after use, do NOT touch the motor! Danger of burning yourself!

FCC PART 15 B Notice:
CAUTION

Warning: Changes or modifications to this unit not expressly approved by the party responsible for compliance could void the user's authority to operate the equipment.

NOTE: This equipment has been tested and found to comply with the limits for a Class B digital device, pursuant to Part 15 of the FCC Rules. These limits are designed to provide reasonable protection against harmful interference in a residential installation. This equipment generates, uses and can radiate radio frequency energy and, if not installed and used in accordance with the instructions, may cause harmful interference to radio communications.

However, there is no guarantee that interference will not occur in a particular installation. If this equipment does cause harmful interference to radio or television reception, which can be determined by turning the equipment off and on, the user is encouraged to try to correct the interference by one or more of the following measures:

- Reorient or relocate the receiving antenna.
- Increase the separation between the equipment and receiver.
- Connect the equipment into an outlet on a circuit different from that to which the receiver is connected.
- Consult the dealer or an experienced radio/TV technician for help.

This device complies with Part 15 of the FCC Rules. Operation is subject to the following two conditions:

(1) this device may not cause harmful interference, and

(2) this device must accept any interference received, including interference that may cause undesired operation.

电池使用注意事项

1. 遥控器使用4节1.5V“AA”号电池；
2. 安装或更换电池时请注意极性；
3. 充电电池只能在成人监护下充电；
4. 不可混用新旧或不同型号的电池；
5. 电池电量用尽后,应从模型内取出；
6. 将耗尽电量的电池交给专门的环保部门处理!
7. 接线端不应短路；
8. 非充电电池不可充电；
9. 充电电池充电前应从模型中取出；
10. 请不要将坏的电池、电池组分解或扔到火中、水里,以免发生意外；
11. 充电器的额定输入电压必须与当地的家用电压相符；
12. 在充电过程中,充电器和电池出现微温,属于正常现象；
13. 不可吞咽电池!
14. 将电池放在凉爽、干燥避光及小孩接触不到的地方!
15. 电池漏液而且滴到眼睛里,请马上用大量的清水清洗,然后到附近的医院就医。
16. 遥控车供电电压DC8.4V输入，支持2S锂电池7.4V供电。

安全注意事项

1. 干电池或充电电池的不适当使用，会损害车或无线电的系统。
2. 模型只能使用推荐的充电器，充电器不是模型，可用液体清洗的模型清洁前应与充电器断开，定期检查充电器的电线、插头、外壳和其他部件是否损坏，发现损坏时应停止使用，直至修复完好。
3. 说明书含有重要信息，请予以保留。

Power Switch 开关

1. Turn on the power switch of the transmitter, the signal indicator light of transmitter flashes.
2. Press the power button of high speed car, the indicator light of high speed car flashes.
3. When the indicator light stays on, the high speed car can be operated to play.

1. 打开遥控器电源开关，遥控器信号指示灯闪烁。
2. 按下高速车电调的电源开关按钮，高速车指示灯闪烁。
3. 当指示灯变为常亮后，便可操控高速车。

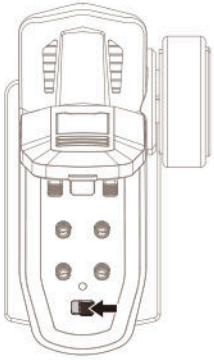

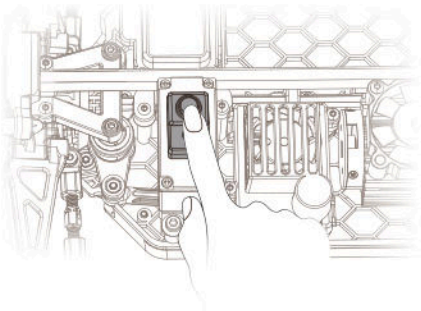

⚠
- When turn on the transmitter, please DO NOT touch the throttle and steering. After turn on the transmitter's power, please operate after the indicator light of transmitter staying on.
- Please comply the principle of "turn on the transmitter firstly, then turn on the high speed car".
- In the frequency matching, please make sure there is only one pair of transmitter and high speed car in matching at the same time, otherwise the frequency will match wrongly.

- 当准备开启遥控器时，请勿触动油门和转向。打开遥控器开关，遥控器指示灯点亮后才能进行操作。
- 开机时应遵循"先开启遥控器，再开启高速车"的原则。
- 在同一时刻，请确保对码的遥控器和高速车只有一对，否则会对错遥控器。

R30 Receiver 接收器

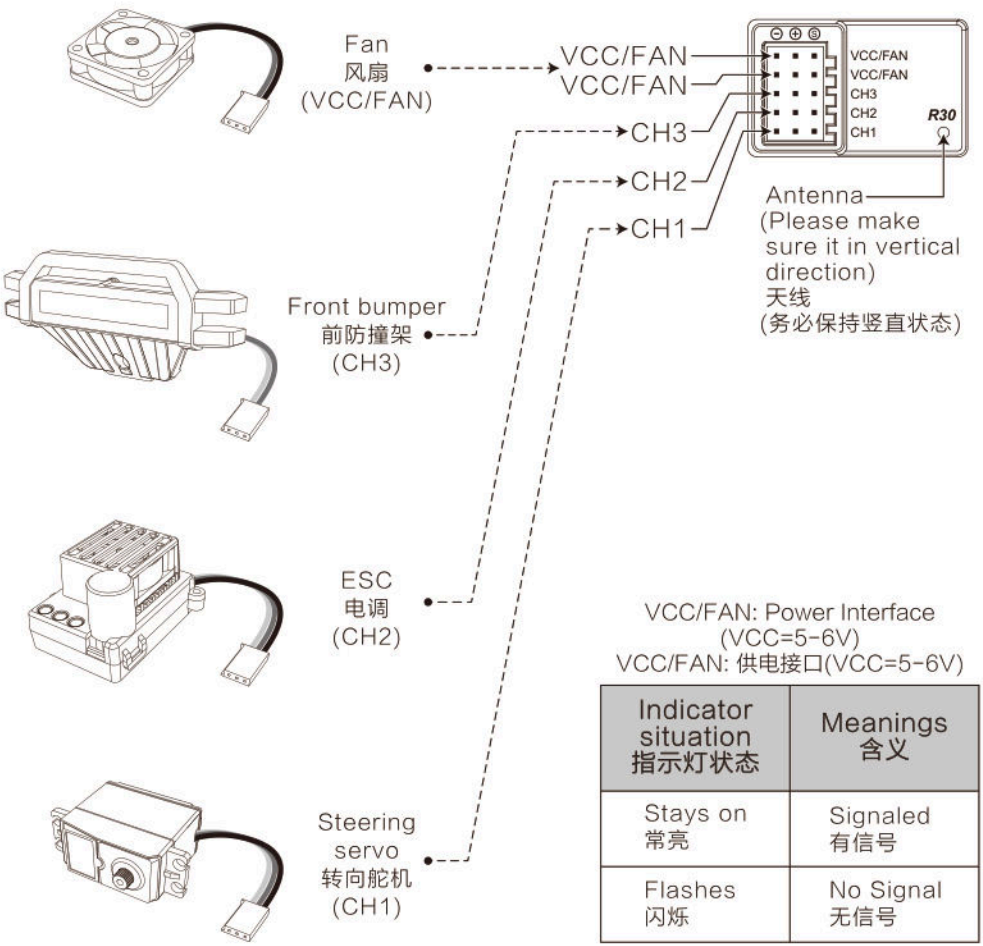

VCC/FAN: Power Interface
(VCC=5-6V)
VCC/FAN: 供电接口(VCC=5-6V)

Indicator situation 指示灯状态	Meanings 含义
Stays on 常亮	Signaled 有信号
Flashes 闪烁	No Signal 无信号

⚠ Warning: Please make sure the connection is correct.
警告：请注意连接是否正确。

E45S Brushless ESC 电调

⚠ Please Do Not forcible/reversely insert all sockets.
所有插座请勿强行反插。

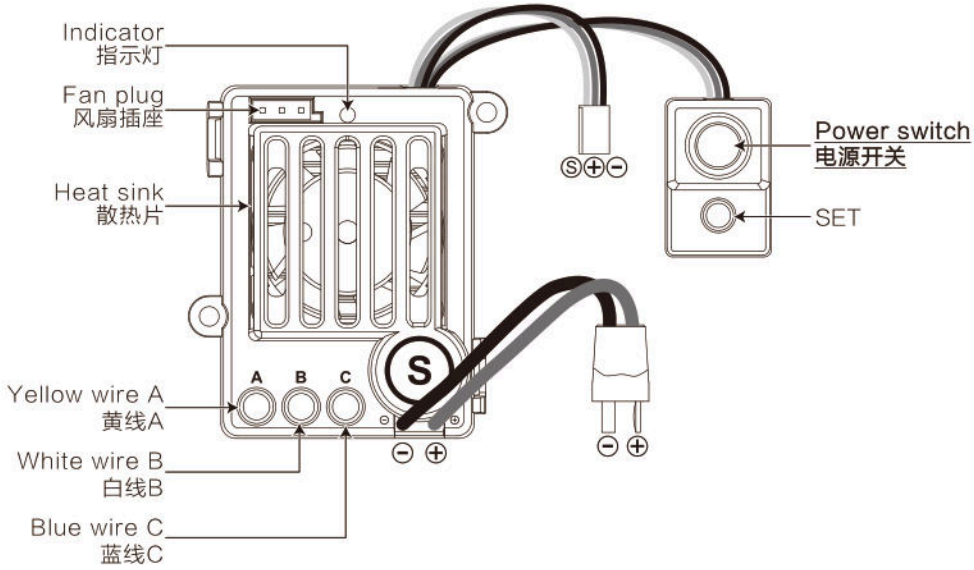

Indicator light situation 指示灯状态	Meanings 含义
Stays on 常亮	Signaled 有信号
Flash quickly 快闪	a. No signal 无信号 b. Pull the trigger 扣动扳机
Flash slowly 慢闪	Low voltage 低电压
Flash twice 闪两下	Over heat protection 过热保护
Off 熄灭	Stuck protection 堵转保护

Set the throttle range (Transmitter calibration)
设定油门行程（遥控器校准）

When replacing the transmitter with a new one, it is recommended to reset the throttle range, otherwise the ESC may become inoperable or abnormal.
当更换新的遥控器时，建议重新设置油门行程，否则可能会导致ESC无法使用或异常。

ESC enters "the throttle range" state:
ESC进入油门行程校准模式：

1. Turn on the transmitter, adjust the throttle trim to the middle position, and keep the status of "D/R","EPA","ATL" and other parameters of the throttle channel of the transmitter at 100%;
   打开遥控器，将油门微调调至中间位置，同时请保持遥控器油门通道的"D/R"、"EPA"、"ATL"等参数状态为100%；
2. The ESC is connected to the battery, but in the off state, keep holding down the【SET】state, short press ON/OFF, the LED on the ESC will start to flash, and at the same time, the motor will start to chirp, at this time, you can release the【SET】button. The red light on the ESC is in the fast-flashing state, and it has entered "the throttle range" state.
   电调连接电池，但处于关闭状态，保持按住【SET】状态，短按ON/OFF，电调上LED开始闪烁，同时电机开始鸣叫，此时即可松开【SET】按键。电调红灯处于快闪状态，已进入油门行程校准状态。



Calibration steps (please follow the order):
校准步骤 (请按照顺序进行)：

1. Keep the transmitter throttle in the mid-point position, press【SET】once, the red light of ESC goes out and the motor "Di", indicating that the mid-point position has been successfully stored;
   保持遥控器油门处于中点位置，按一次【SET】，ESC红灯熄灭，电机"Di"，表明已成功储存中点位置；

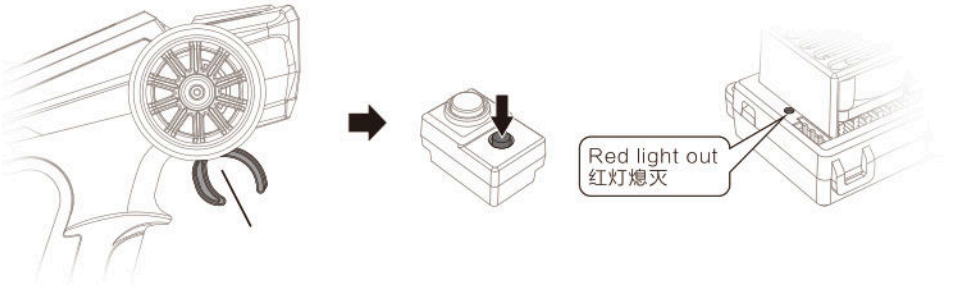

2. Keep the throttle of the transmitter in the maximum forward position, press【SET】once, the red light of ESC flashes twice and then goes out, the motor "Di.Di", indicating that the maximum forward position has been successfully stored;
保持遥控器油门处于最大前进位置，按一次【SET】，ESC红灯闪烁2次后熄灭，电机"Di.Di"，表明已成功储存最大前进位置；

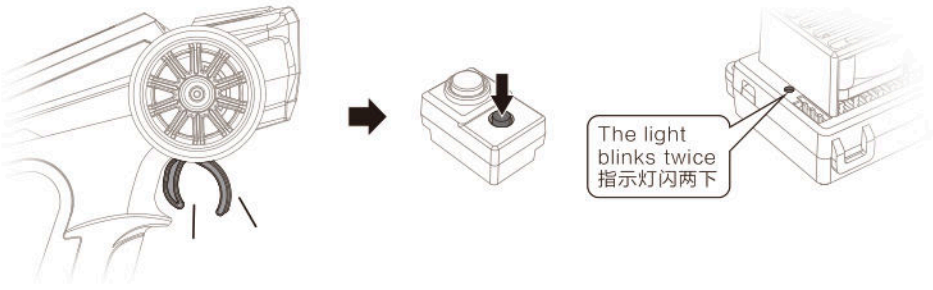

3. Keep the transmitter throttle in the maximum backward position, press【SET】once, ESC red light blinks 3 times and then goes out, motor "Di.Di.Di", indicating that the maximum backward position has been successfully stored.
保持遥控器油门处于最大后退位置，按一次【SET】，ESC红灯闪烁3次后熄灭，电机"Di.Di.Di"，表明已成功储存最大后退位置。

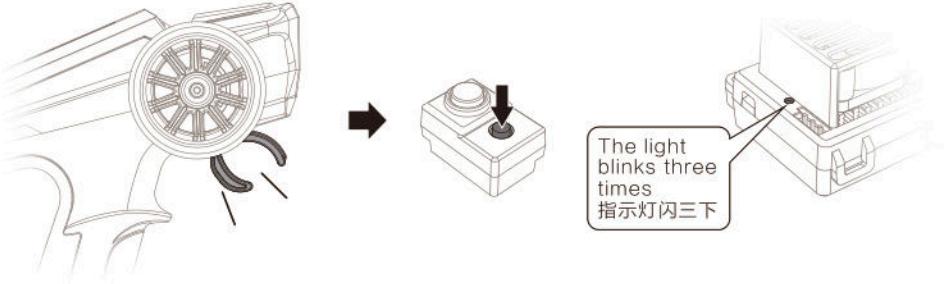

After completing the above three steps, it means the calibration has been completed. When the transmitter throttle returns to the centre position, the ESC can work normally.
完成以上三个步骤后，代表校准已完成。遥控器油门回到中点位置时，ESC即可正常工作。

It is recommended to perform a throttle travel calibration when starting a new vehicle to get the most accurate experience.
建议新车入手时，进行一次油门行程校准，以获得最精准的体验。

Throttle range back to initial setting
油门行程恢复初始设置

When the ESC is powered on, press and hold【SET】for 5 seconds, the motor will emit "Di.Di", the ESC indicator light will flash twice, and the throttle range will be restored to the initial setting.
在ESC通电并开启状态下，长按【SET】5秒，电机发出"Di.Di"，ESC指灯闪两下，油门行程恢复为初始设置。

T3D Transmitter 遥控器

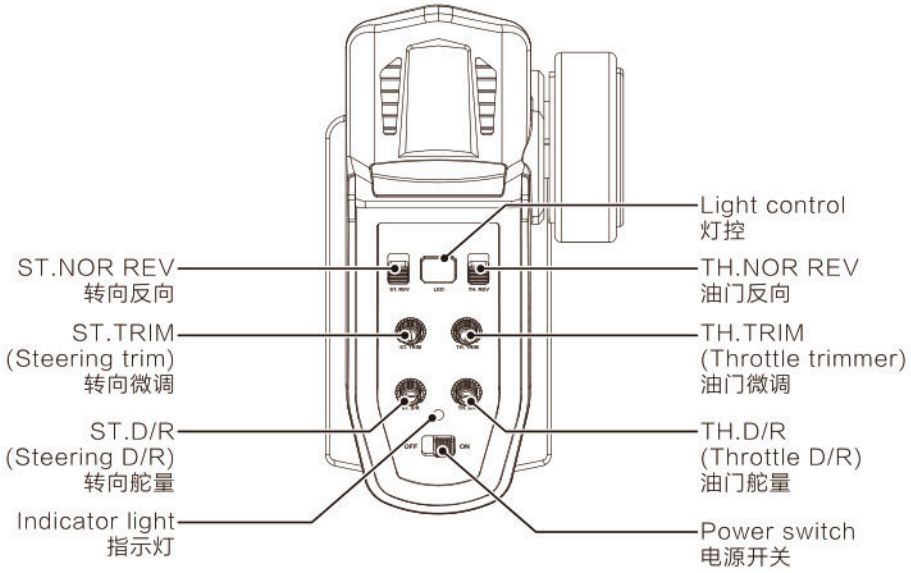

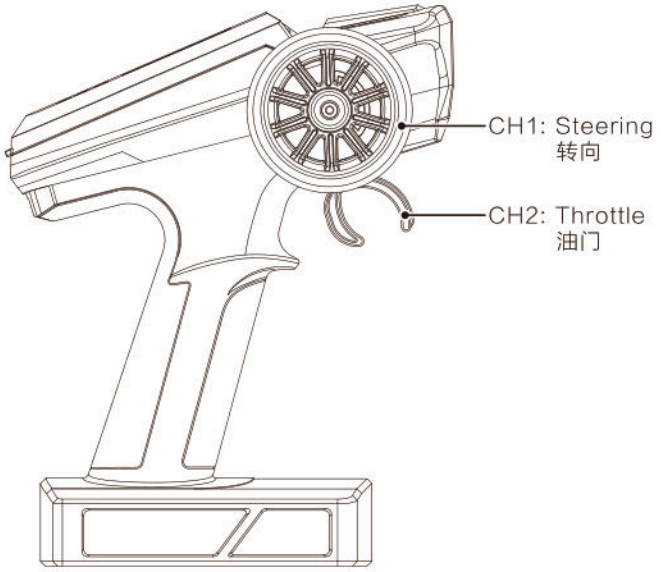

①ST.TRIM (Steering servo trimmer 转向舵机微调)

If the car cannot go straightly during driving, it can be adjusted through the ST.TRIM.
车辆行驶过程中如无法直线行驶，可通过此微调进行调整。

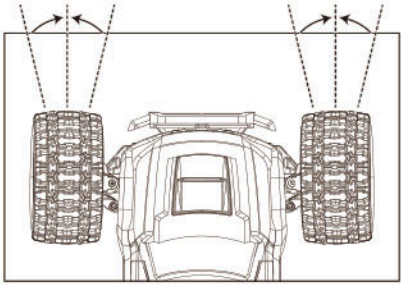

②TH.TRIM (Throttle trimmer 油门中位微调)

If the car can't be stop when the TH in the middle place, you can adjust the button to stop the car.
如TH（油门）在中位状态下，车辆无法正常停止，可通过此微调进行调节，使车辆停止。

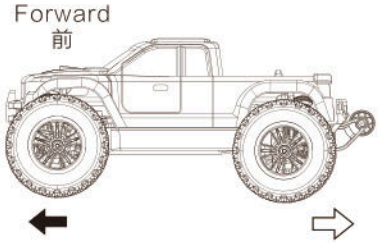

③Indicator light 指示灯

Stays on 常亮	Working well 正常
Flash quickly 快闪	Frequency mating 对码状态
Flash slowly 慢闪	Low battery of transmitter 遥控器电池电量低

④Fn(CH3 Light control) 灯控

Short Press the "▢" button to turn on/off the light of high speed car.
短按"▢"按键时，控制高速车灯光开启或关闭。

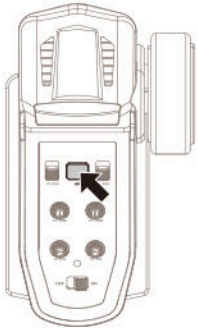

⑤CH1：ST (Steering 转向)

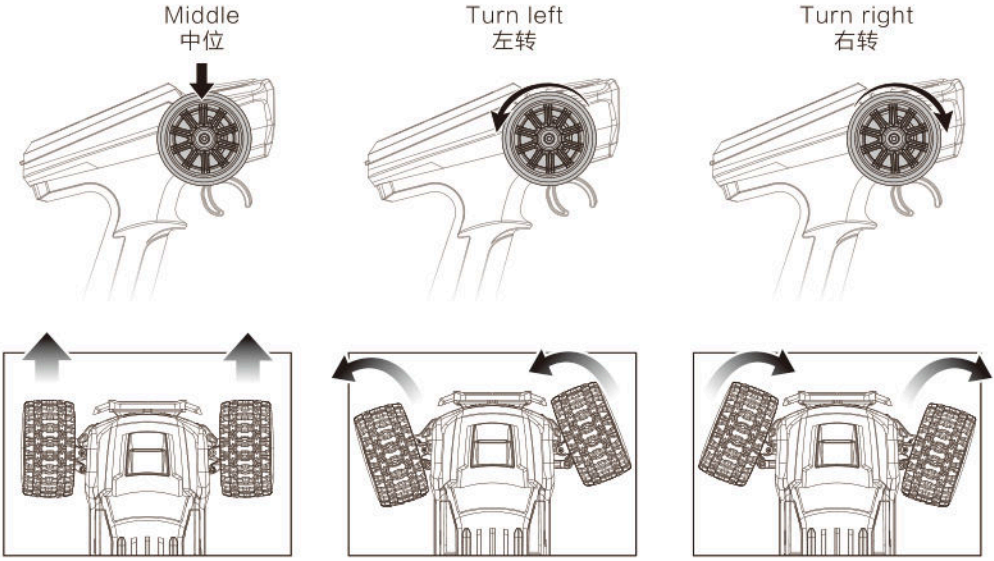

⑥CH2：TH (Throttle 油门)

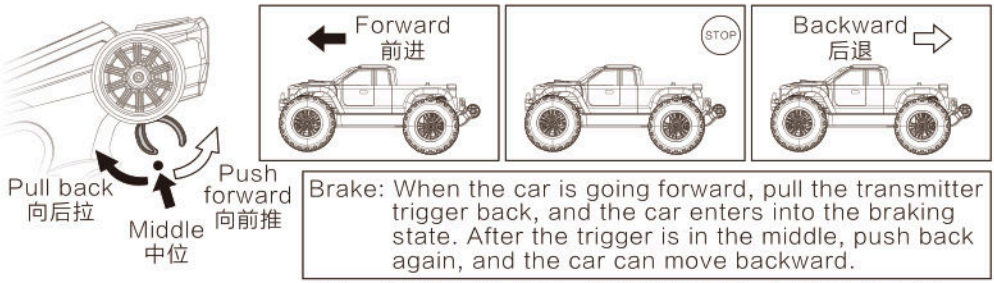

Brake: When the car is going forward, pull the transmitter trigger back, and the car enters into the braking state. After the trigger is in the middle, push back again, and the car can move backward.

刹车：当车辆向前行驶时，遥控器推动后退，车辆进入刹车状态，需油门归中后，再次推动后退，车辆才能后退。

*When the car is in reverse situation, it does not the brake function.
车辆处于后退状态下，无刹车功能。

Install the Transmitter's Battery
遥控器安装电池

Open the transmitter's battery cover, insert 4 AA batteries according to the indicated positive and negative direction, close the battery cover.
将遥控器电池盖打开，按照遥控器指示的正负极，正确装入4节AA电池，再重新盖上电池盖。

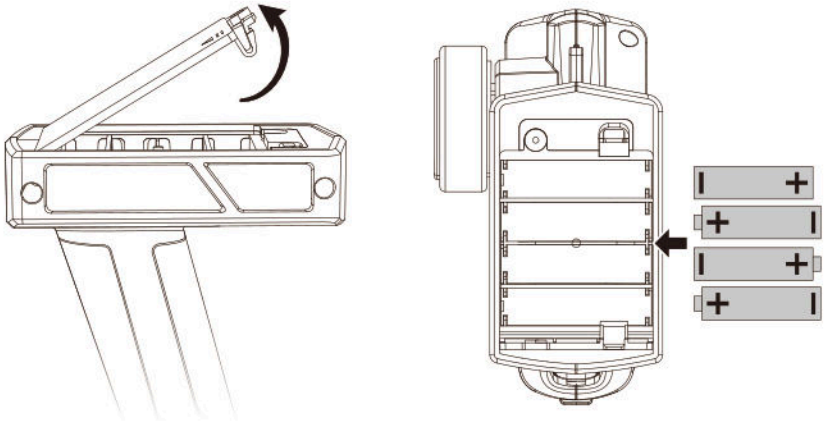

Install the Head Wheels
抬头轮安装

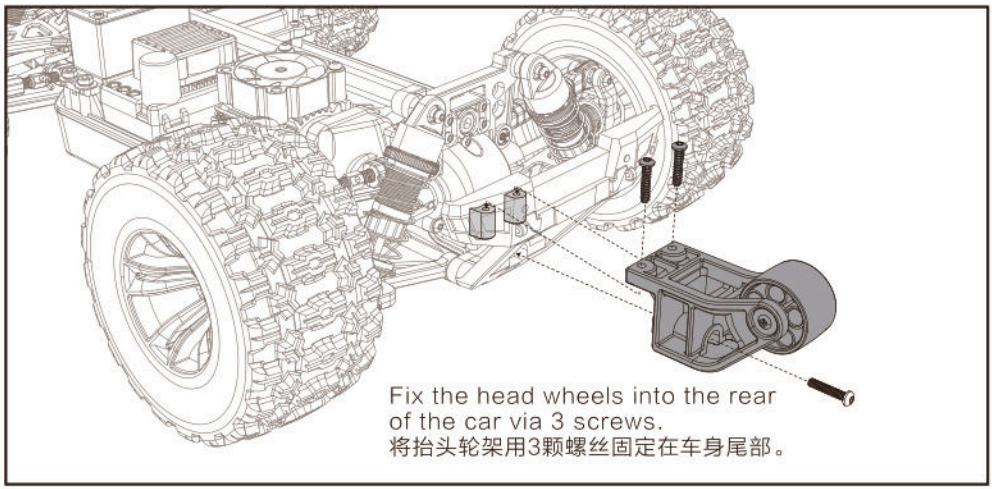

Install the Battery 安装电池

①Unlock the fixing tape;
将固定带解开；
②Insert the battery into the battery box, make sure it’s in place;
将电池放入电池座，确保安装到位；
③Tighten the battery with the fixing tape;
将固定带绑紧电池；
④Connect the receiver plug to the battery.
将接收器插头连接电池。

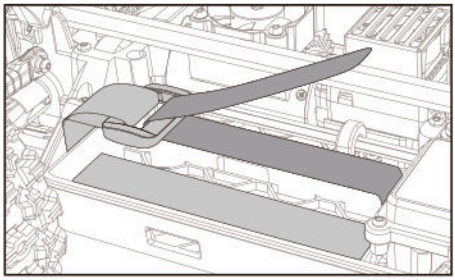

❶

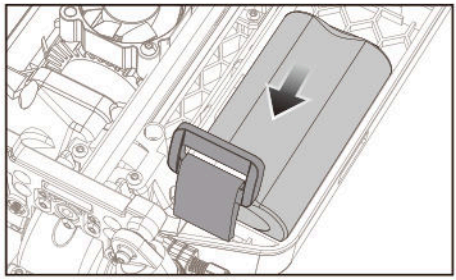

❷

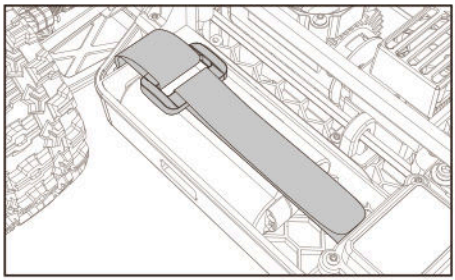

❸

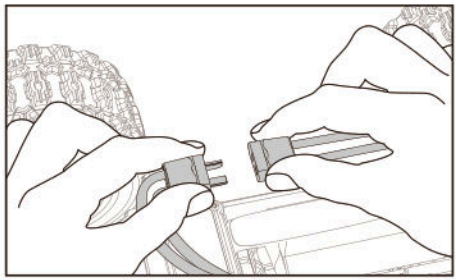

❹

Charge 充电

If charging with a 5V 2A USB adapter.
- When charging, the indicator light of charger is green and flashes;
- When the battery is fully charged, the green indicator light of the charger stays on.

*The above charging time data is based on the test result of 5V 2A adapter. Using different specifications of adapters or power supply equipment will affect the actual charging time. It is recommended to use a 5V 2A adapter for charging.

使用5V 2A USB适配器进行充电。
- 电池充电时，充电器绿色指示灯闪烁；
- 电池满电时，充电器绿色指示灯常亮。

*以上充电时长数据为配置5V 2A适配器的测试结果，使用不同规格的适配器和供电设备会影响实际充电时间。建议使用5V 2A适配器进行充电。

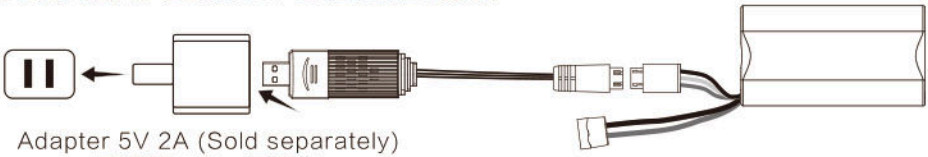

Adapter 5V 2A (Sold separately)
适配器5V 2A (需另购)

Install Car Shell 安装车壳

Insert the body into the front mount and press the latch vertically down to the rear mount. Slide the latch to lock the body.

将车壳插入前固定件，锁扣垂直下压到后固定件，掰动锁扣锁紧车壳。

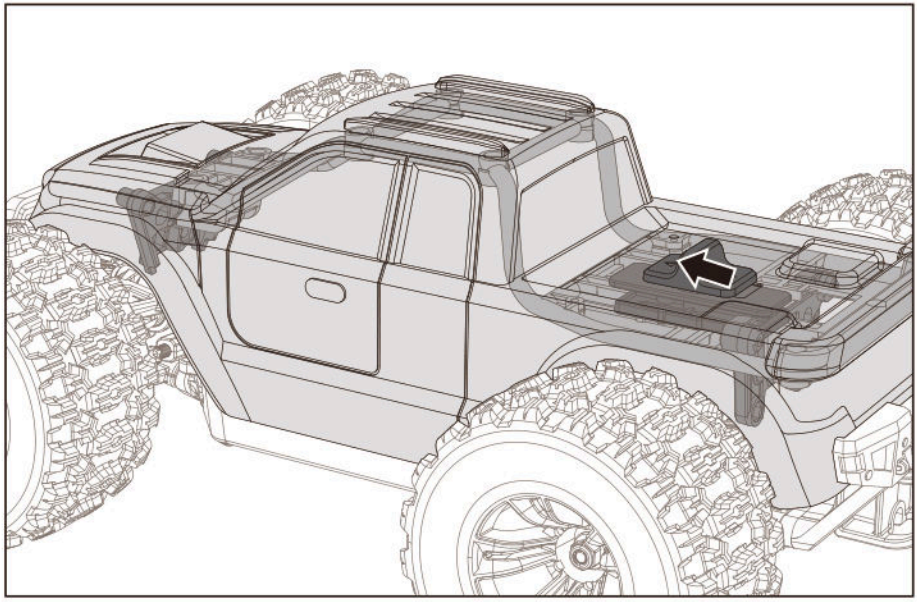

Front Swing Set 前摆臂组件

Screw 螺丝:

HTB2612 Ø2.6x12mm 2PCS

Screws
半圆头自攻螺丝

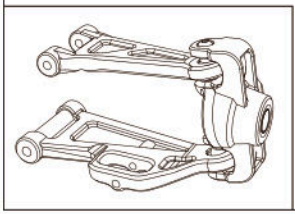

Bearing 轴承:

R168Z 2PCS

Ball bearing
滚珠轴承

Pivot balls 球头:

Q1601 2PCS

Steering pivot balls
球头

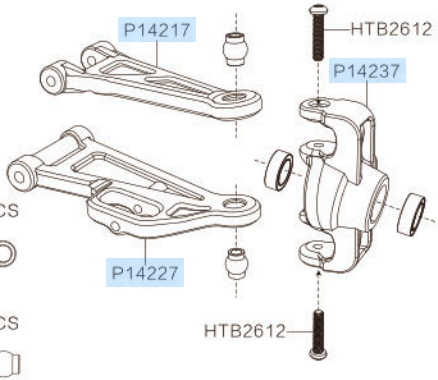

Rear Swing Set 后摆臂组件

Screw 螺丝:

HTM2516 Ø2.5x16mm 1PCS

Screws
半圆头机丝螺丝

Bearing 轴承:

R168Z 2PCS

Ball bearing
滚珠轴承

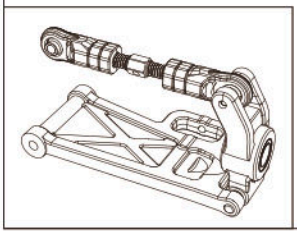

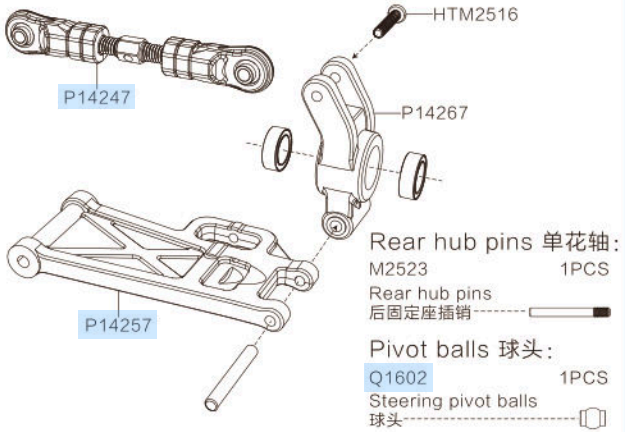

Rear hub pins 单花轴:

M2523 1PCS

Rear hub pins
后固定座插销

Pivot balls 球头:

Q1602 1PCS

Steering pivot balls
球头

14400Y2 Metal Gears Main Driving Set 全金属主传动组件

Bearing 轴承:

R168Z 2PCS

Ball bearing
滚珠轴承

R1810 2PCS

Ball bearing
滚珠轴承

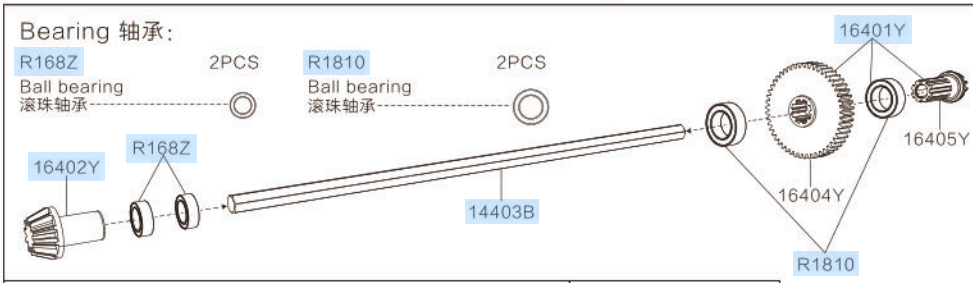

14400Y2



P1417Q



Ø8xØ5x2.5mm

B2852E & P14397 Motor Assembly 电机组件

Screw 螺丝:

HTM3010 Ø3x10mm 2PCS
Screws
半圆头机丝螺丝

HTM3015 Ø3x15mm 2PCS
Screws
半圆头机丝螺丝

M3030 Ø3x3mm 1PCS
Hexagon socket machine screw
内六角机丝螺丝

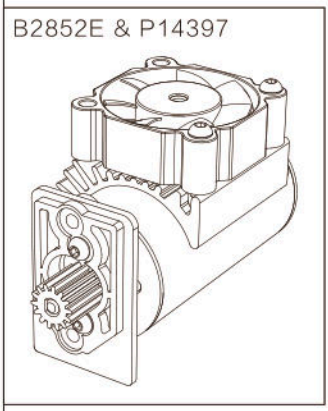

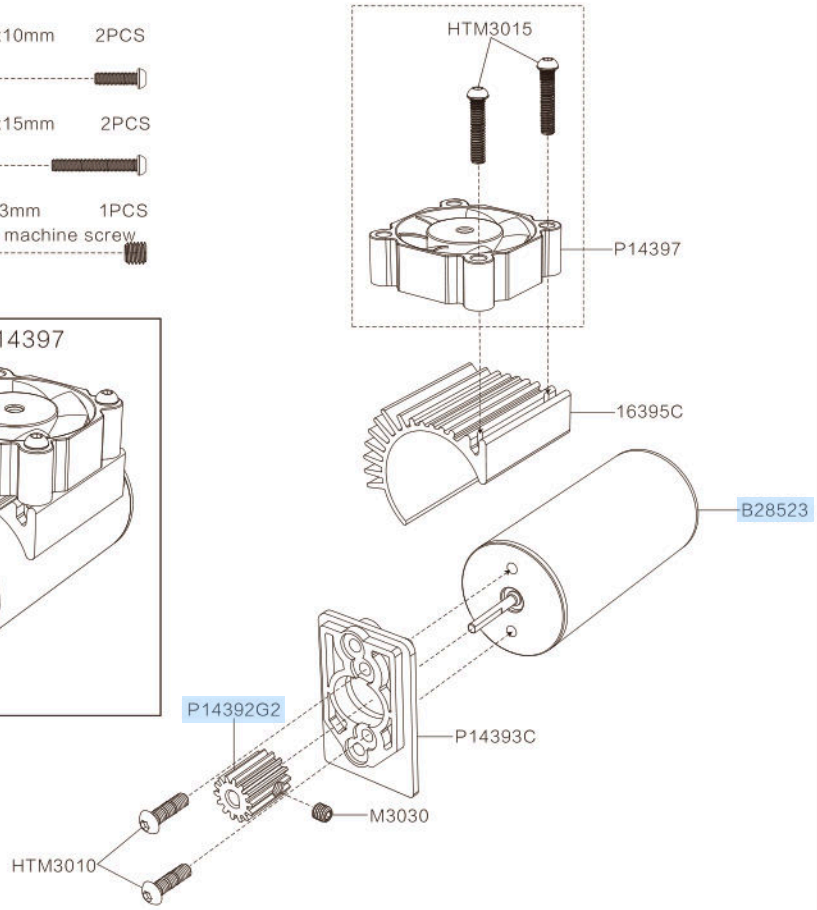

P14707 Servo Assembly 舵机组件

Screw 螺丝:

HTM3080 Ø3x8mm 1PCS
Screws
半圆头机丝螺丝

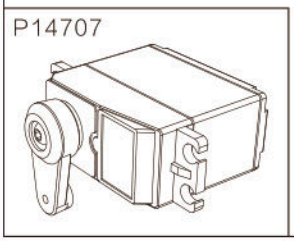

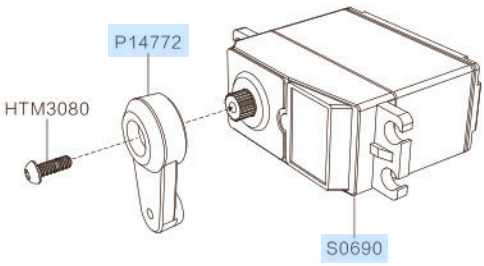

P144307 Steering Assembly 转向传动组件

Screw 螺丝:

HTM2512G Ø2.5x12mm 2PCS
Screws
半圆头机丝螺丝

HTHM2583 Ø2.5x8mm 2PCS
Screws
半圆头半牙螺丝

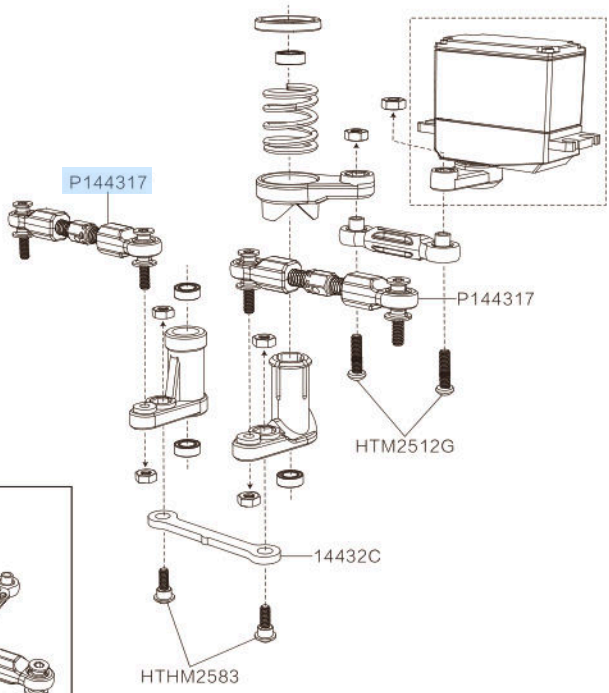

P144307

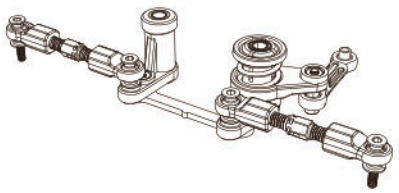

P14517/P14507 Oil Filled Shock 油压避震

Add shock oil
添加避震油



Shock absorbers adjuster
避震调节器
Spin the suspension adjuster to adjust the shock absorbers' strength.
可旋转避震调节器以调整避震力度。

P14517

P14507

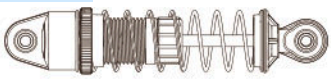

P14208F/P14208R Front/Rear Gears Diff Assembly
前后差速器

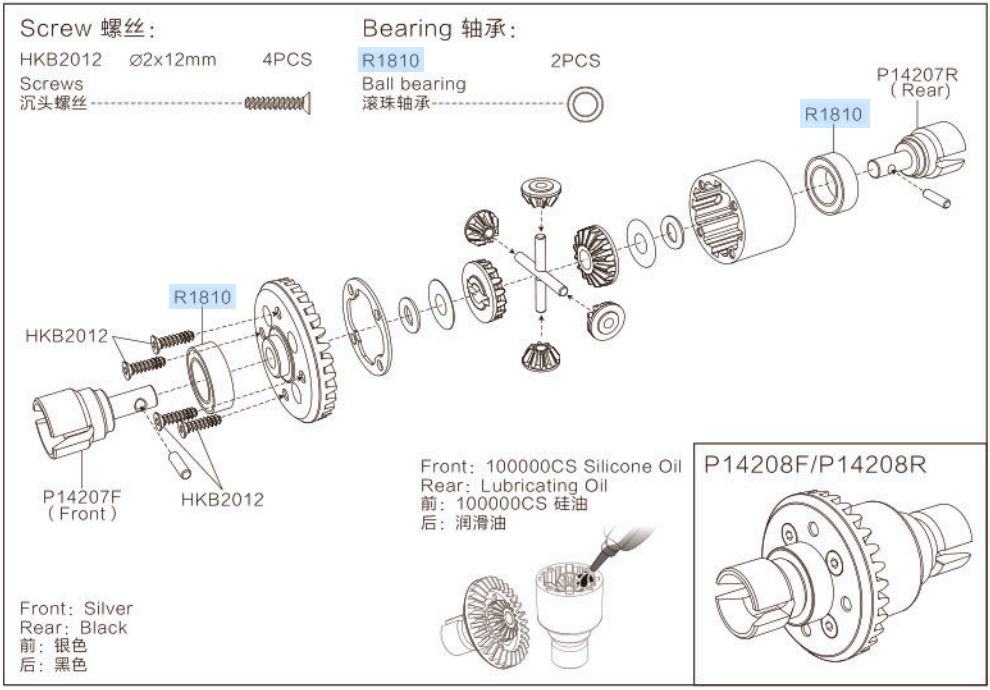

P14107 Front Bumper Assembly 前防撞组件

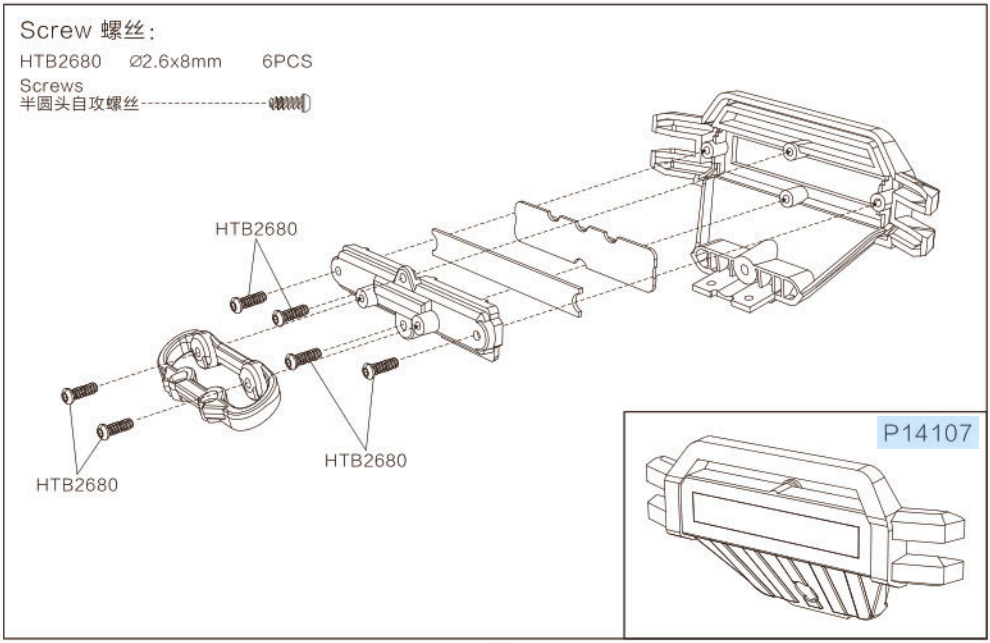

High Speed Car Assemble 高速车总装

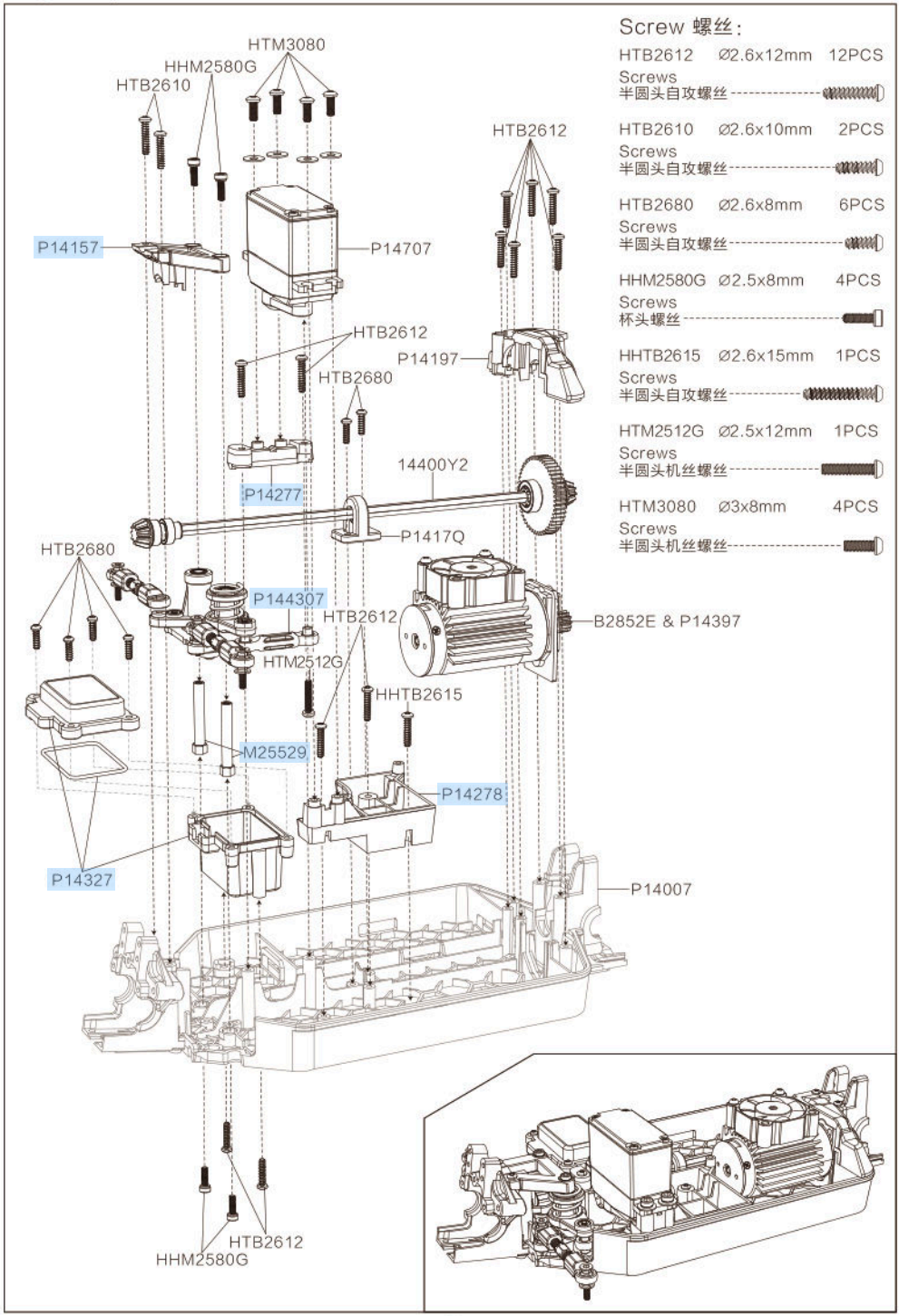

Screw 螺丝:

HTB2612	Ø2.6x12mm	12PCS
Screws 半圆头自攻螺丝		
HTB2610	Ø2.6x10mm	2PCS
Screws 半圆头自攻螺丝		
HTB2680	Ø2.6x8mm	6PCS
Screws 半圆头自攻螺丝		
HHM2580G	Ø2.5x8mm	4PCS
Screws 杯头螺丝		
HHTB2615	Ø2.6x15mm	1PCS
Screws 半圆头自攻螺丝		
HTM2512G	Ø2.5x12mm	1PCS
Screws 半圆头机丝螺丝		
HTM3080	Ø3x8mm	4PCS
Screws 半圆头机丝螺丝		

High Speed Car Assemble 高速车总装

Screw 螺丝:

HTB2610 Ø2.6x10mm 19PCS
Screws
半圆头自攻螺丝

HTB2615 Ø2.6x15mm 2PCS
Screws
半圆头自攻螺丝

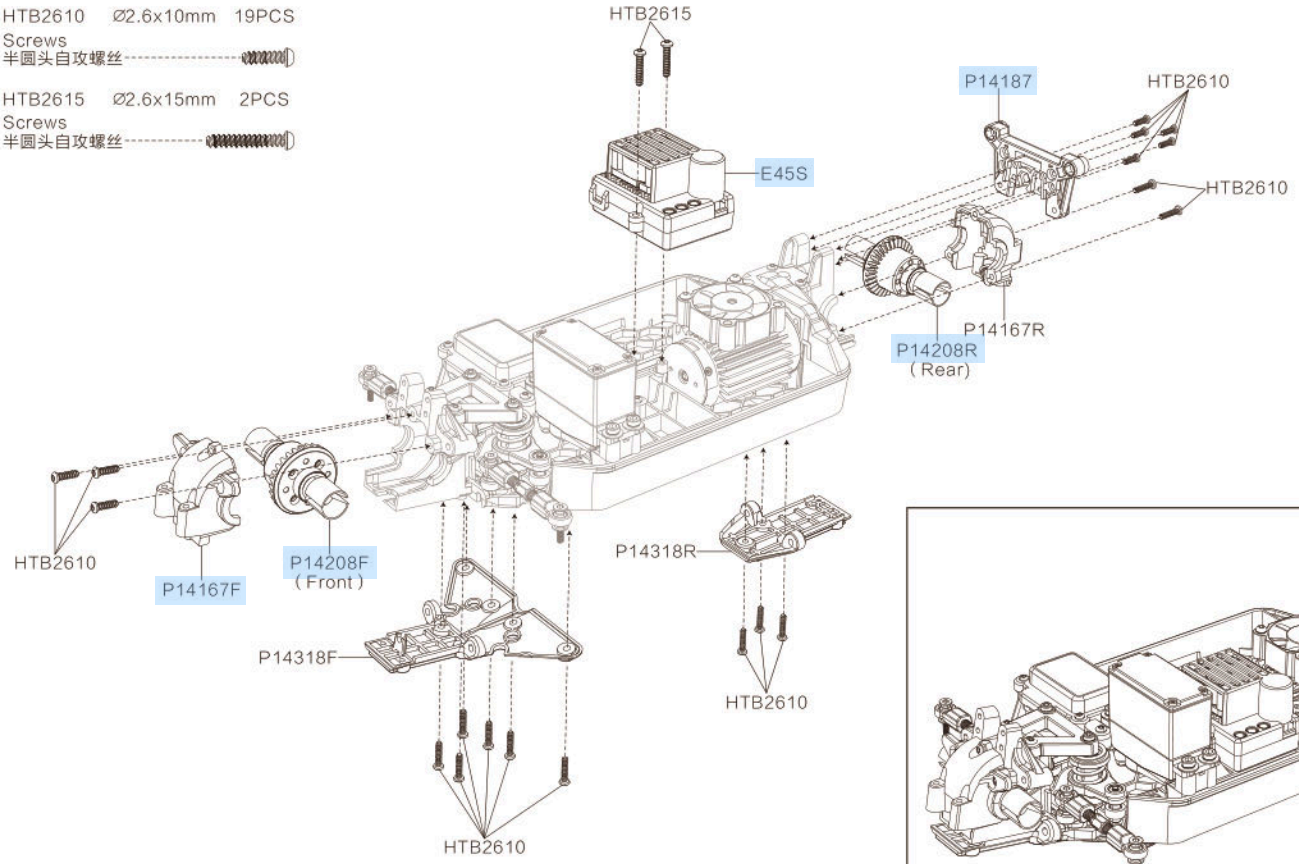

High Speed Car Assemble 高速车总装

Screw 螺丝:

HTB2610 Ø2.6x10mm 4PCS
Screws
半圆头自攻螺丝

HHM4012 Ø4x12mm 2PCS
Screws
杯头螺丝

HTM2514G Ø2.5x14mm 1PCS
Screws
半圆头机丝螺丝

Iron shaft 铁轴:

M25250 2PCS
Upper swing arm fixed shaft
上摆臂固定轴

M30430 4PCS
Lower swing arm fixed shaft
下摆臂固定轴

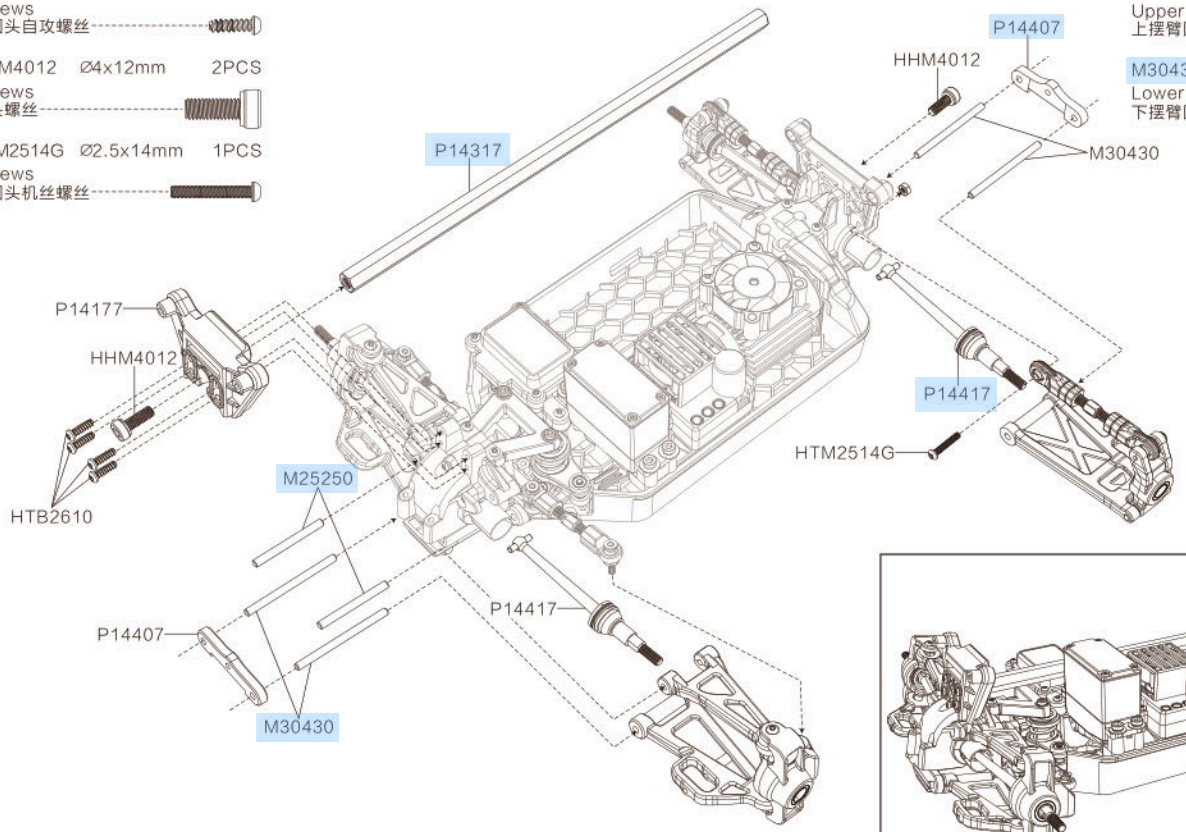

High Speed Car Assemble 高速车总装

Screw 螺丝:

HTM2516 Ø2.5x16mm 2PCS
Screws
半圆头机丝螺丝----------

HTM2518G Ø 2.5x18mm 1PCS
Screws
半圆头机丝螺丝----------

HTM2516G Ø2.5x16mm 1PCS
Screws
半圆头机丝螺丝----------

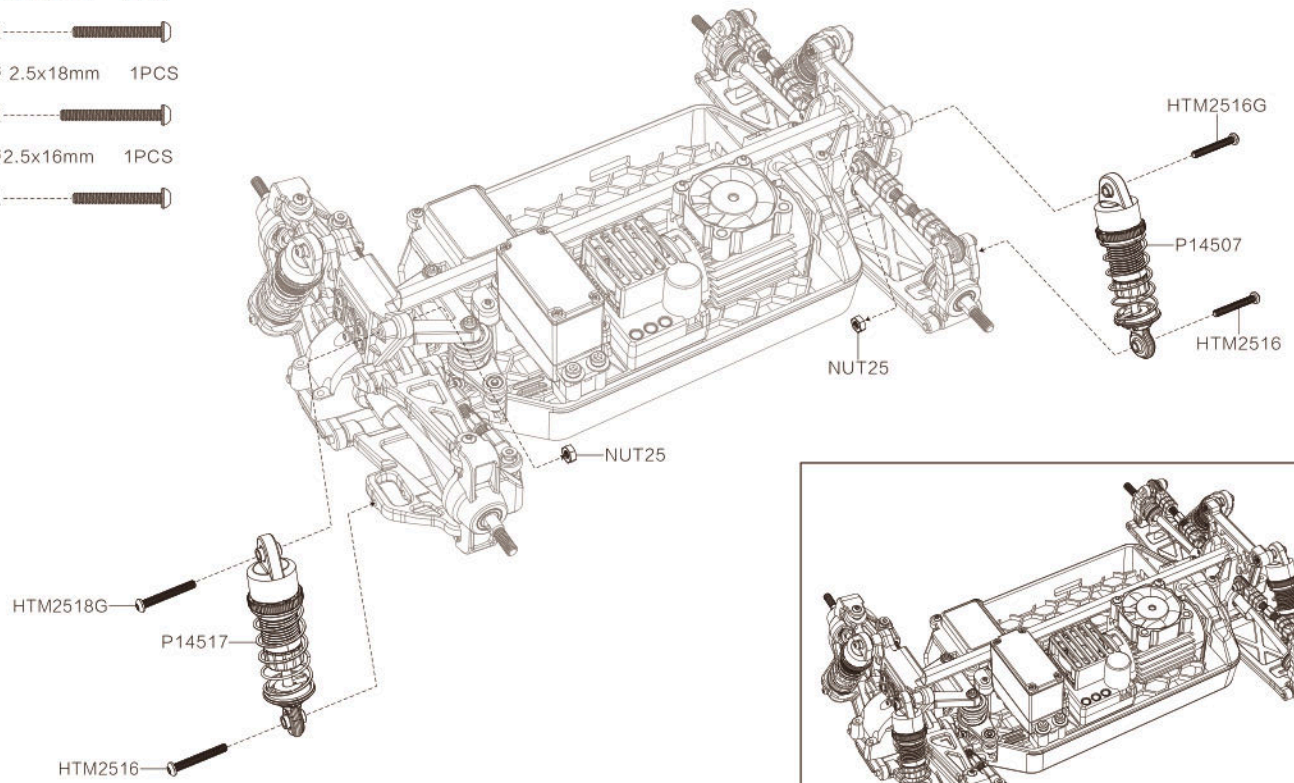

NUT25 2PCS
Nut 螺母----------◎

High Speed Car Assemble 高速车总装

Screw 螺丝:

HTB2612 Ø2.6x12mm 2PCS
Screws
半圆头自攻螺丝

HTM2516G Ø2.5x16mm 2PCS
Screws
半圆头机丝螺丝

HTB2610 Ø2.6x10mm 4PCS
Screws
半圆头自攻螺丝

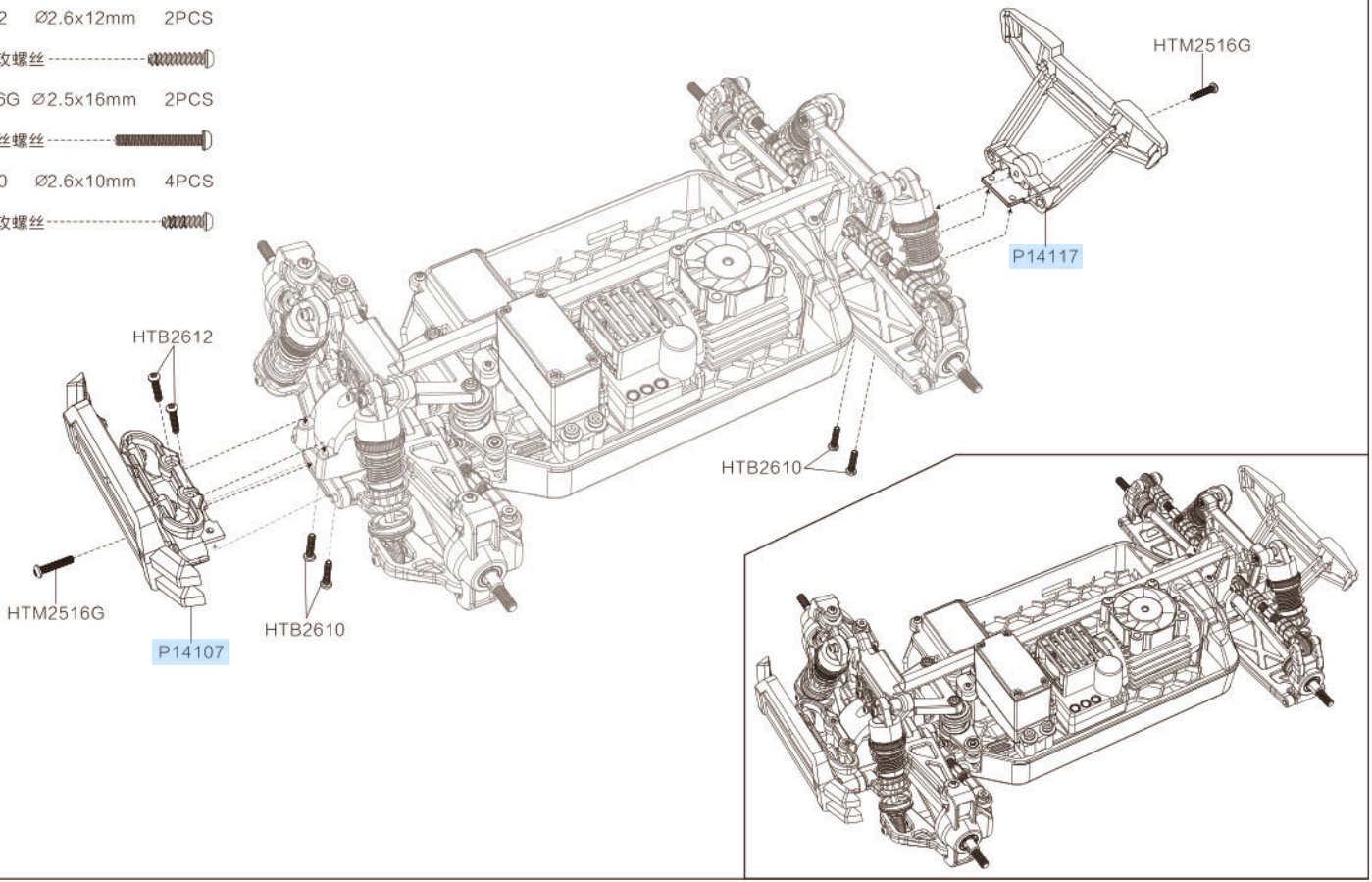

High Speed Car Assemble 高速车总装

Nut 螺母:

M40 1PCS (4PCS)

M4 Wheel lock nut
M4螺母

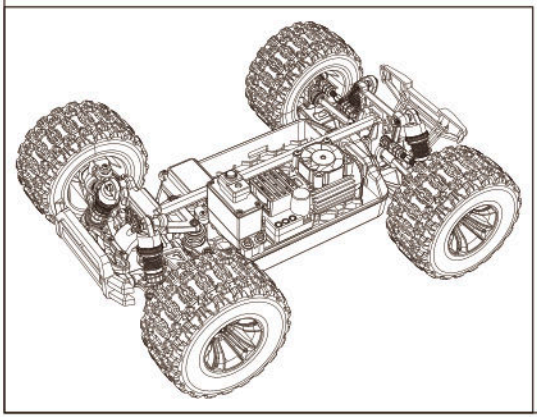

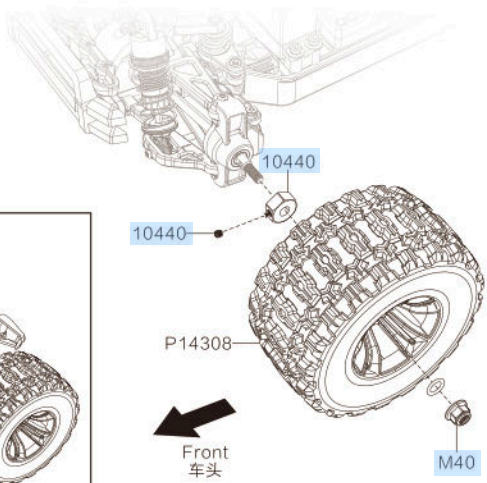

Spare Parts 配件表

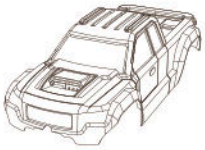			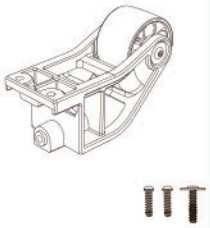
P14018	P14107	P14117	P14127
Body 车壳组件	Front Bumper Assembly 前防撞组件	Rear Bumper 后防撞	Wheelie Bar Assembly 抬头轮
		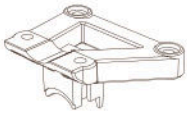	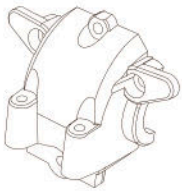
P14007	P14317	P14157	P14167F
Chassis 底盘	Center Brace Bar 中支撑杆	Front Support Frame 前支撑架	Front Gearbox Covers 前齿轮盖
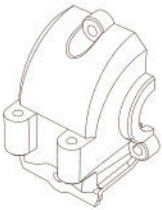	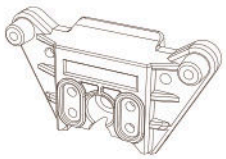	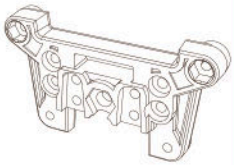	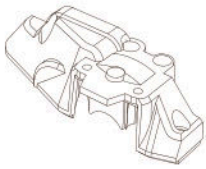
P14167R	P14177	P14187	P14197
Rear Gearbox Covers 后齿轮盖	Front Shock Tower 前避震架	Rear Shock Tower 后避震架	Rear Upper Gearbox Covers 后上齿轮盖

Spare Parts 配件表

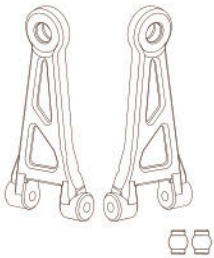	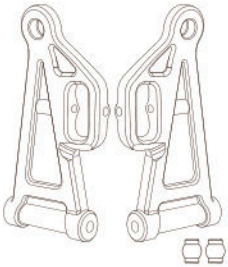	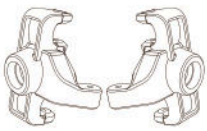	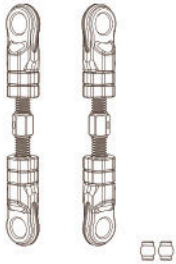
P14217	P14227	P14237	P14247
Front Upper Suspension Arms (Including Ball Head) 前上摆臂(含球头)	Front Lower Suspension Arms (Including Ball Head) 前下摆臂(含球头)	Steering Block 转向座	Rear Upper Suspension Arms (Including Ball Head) 后上摆臂(含球头)
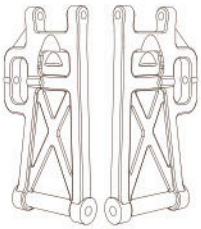	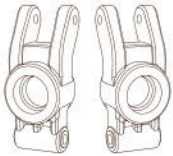		
P14257	P14267	M25250	M30430
Rear Lower Suspension Arms 后下摆臂	Rear Hubs 后固定座	Upper Swing Arm Fixed Shaft 上摆臂固定轴	F/R Lower Swing Arm Fixed Shaft 下摆臂固定轴
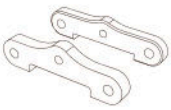	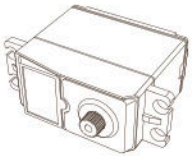		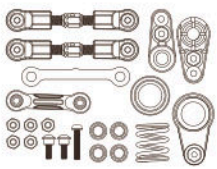
P14407	S0690	P14772	P144307
F/R Reinforced Sheet 前后加强件	Servo 舵机	Servo Saver Assembly 舵机离合摆臂	Steering Assembly 转向传动组件

Spare Parts 配件表

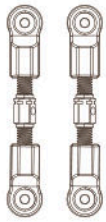		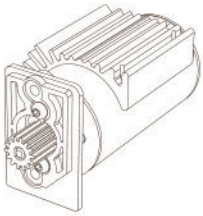	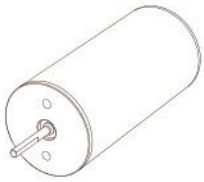
P144317	14432C	B2852E	B28523
Steering Linkage 转向拉杆(2PCS)	Connecting Rod 转向连杆	Motor Assembly 电机组件	Brushless Motor 无刷电机
	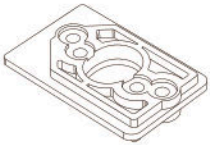	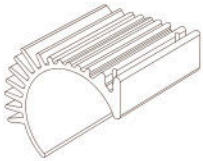	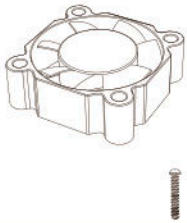
P14392G2	P14393C	16395C	P14397
Motor Pinions 电机输出齿	Motor Guard 电机固定座	Motor Heatsink 散热片	Motor Fan 风扇
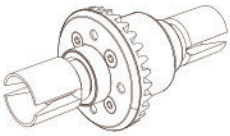	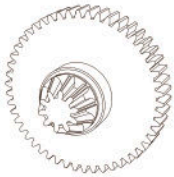		
P14208F/P14208R	16401Y	16402Y	14403B
F/R Gears Diff Assembly 前后差速器	Spur Gear Assembly (Metal) 传动主齿轮组件(金属)	Drive Gear (Metal) 前锥齿(金属)	Centre Drive Shaft 主轴

Spare Parts 配件表

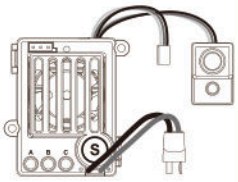	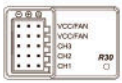		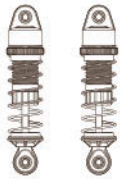
E45S	R30	T3D	P14517
Brushless ESC 无刷电子调速器	Receiver 接收器	Transmitter 遥控器	Oil Filled Shock (Front) 油压避震(前)
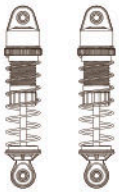	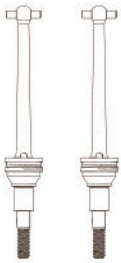	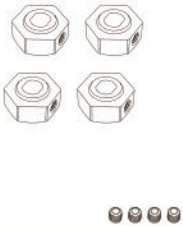	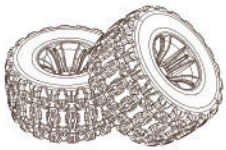
P14507	P14417	10440	P14308
Oil Filled Shock (Rear) 油压避震(后)	Metal F/R CVD Shafts (2 Sets) 轮胎转动组件	Wheel Hex 六角套	Wheel Assembly 车轮组件 (2PCS)
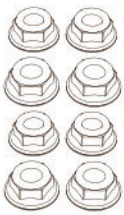	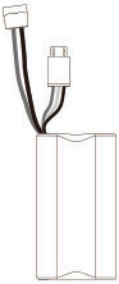		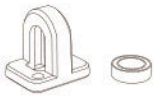
M40	B2S20	P2050	P1417Q
M4 Wheel Lock Nut M4螺母 (8PCS)	Battery 电池	USB Charging Cable USB充电线	Drive Shaft Bracket 主轴支撑架

Spare Parts 配件表

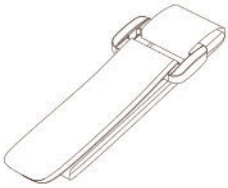		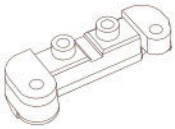	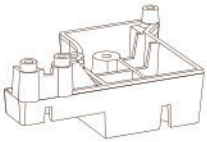
BD30	M25529	P14277	P14278
Battery Base 电池固定带	Steering Shaft 转向轴 (2PCS)	Servo Fix Frame 舵机固定架	ESC Fix Frame 电调固定架
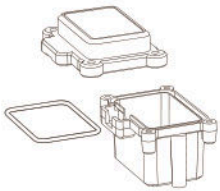	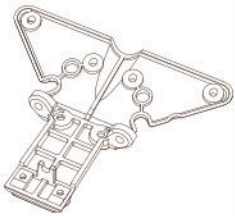		
P14327	P14318F	P14318R	R1810
Receiver Box 接收盒	Front Stiffener 前加强件	Rear Stiffener 后加强件	Ball Bearing 滚珠轴承 (8PCS)
			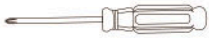
R168Z	Q1601	Q1602	P810
Ball Bearing 滚珠轴承 (8PCS)	Steering Pivot Balls 球头 (8PCS)	Steering Pivot Balls 球头 (8PCS)	Screwdriver 螺丝刀

Spare Parts 配件表

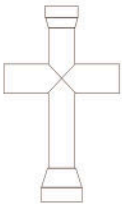	
P812	PH03
Hexagonal Wrench 六角扳手	Screwdriver Sets 螺丝刀套装

Screws 螺丝

HTB2680	Ø2.6x8mm	12PCS
HTB2610	Ø2.6x10mm	12PCS
HTB2612	Ø2.6x12mm	12PCS
HTB2615	Ø2.6x15mm	12PCS
HHTB2615	Ø2.6x15mm	12PCS
HTM2512G	Ø2.5x12mm	12PCS
HTM2514G	Ø2.5x14mm	12PCS
HTM2516	Ø2.5x16mm	12PCS
HTM2516G	Ø2.5x16mm	12PCS
HTM2518G	Ø2.5x18mm	12PCS
HTM3080	Ø3x8mm	12PCS
HTM3010	Ø3x10mm	12PCS
HTM3015	Ø3x15mm	12PCS
HHM2580G	Ø2.5x8mm	12PCS
HTHM2583	Ø2.5x8mm	12PCS
HKB2012	Ø2x12mm	12PCS
HHM4012	Ø4x12mm	12PCS

Others 其他

R1810	Bearing 轴承	8PCS
R168Z	Bearing 轴承	8PCS
NUT25	Nut 螺母	8PCS
M40	Nut 螺母	8PCS

微功率短距离设备相关规定要求如下：

（一）符合“微功率短距离无线电发射设备目录和技术要求”的具体条款和使用场景，采用的天线类型和性能，控制、调整及开关等使用方法；

（二）不得擅自改变使用场景或使用条件、扩大发射频率范围、加大发射功率（包括额外加装射频功率放大器），不得擅自更改发射天线；

（三）不得对其他合法的无线电台（站）产生有害干扰，也不得提出免受有害干扰保护；

（四）应当承受辐射射频能量的工业、科学及医疗（ISM）应用设备的干扰或其他合法的无线电台（站）干扰；

（五）如对其他合法的无线电台（站）产生有害干扰时，应立即停止使用，并采取措施消除干扰后方可继续使用；

（六）在航空器内和依据法律法规、国家有关规定、标准划设的射电天文台、气象雷达站、卫星地球站（含测控、测距、接收、导航站）等军民用无线电台（站）、机场等的电磁环境保护区域内使用微功率设备，应当遵守电磁环境保护及相关行业主管部门的规定；

（七）禁止在以机场跑道中心点为圆心、半径5000米的区域内使用各类模型遥控器；

（八）微功率设备使用时温度和电压的环境条件；

（九）使用微功率短距离无线电发射设备应当符合国家无线电管理有关规定。

MADE IN CHINA

Instructions must be retained since it contains important information.