No.14303

14+

# HYPER GO

# 1:14 RC HIGH SPEED CAR USER MANUAL

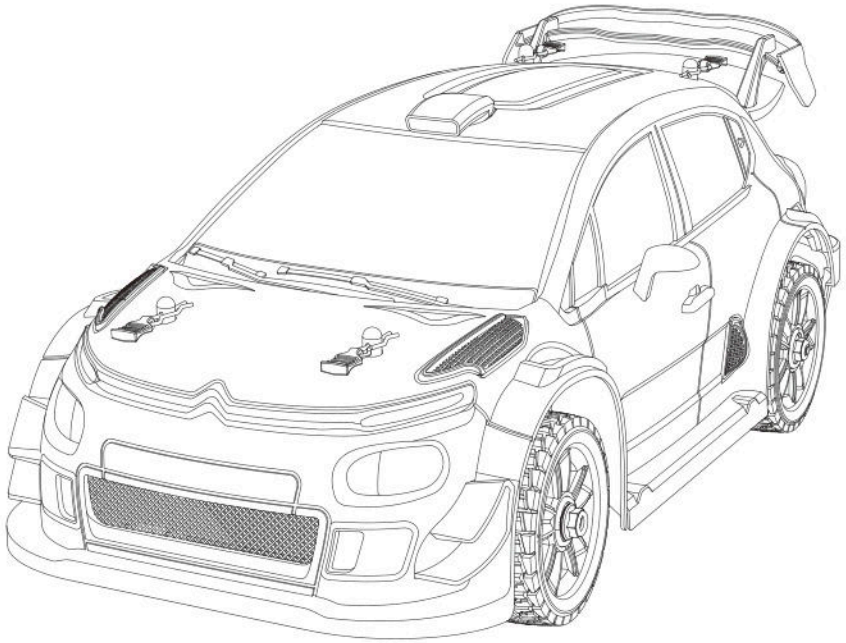

V2.0

4WD REMOTE CONTROL

The instruction sheet for this product is just for your reference. We reserve the right to make changes or adjustments on the product without prior notification. Please refer to the official information.

## Warning:

Choking hazard! This product contains small parts. NOT suitable for children under 3 years. Contains electrical components and should be kept dry at all times. Regularly check the battery charger wires, plugs and shell and other components for damage. DO NOT use if any part is damaged.

## Warnings & Cautions

1. Detachable small parts should be stored safely and out of reach of children.
2. If interference is experienced, turn the model off and try it again in a different area.
3. Transmitter will not function correctly if the batteries are low. Please replace the batteries.
4. Please discard old/used batteries in a safe manner. Consider your environment!
5. Please store the remote control model in cool, dry place.
6. DO NOT expose to fire or high temperatures, do not store in moist place.
7. Once the battery get wet, wipe immediately with a soft dry cloth.
   If the battery any deformation, please stop using.
8. If you don't use the model for a long time, please raise the chassis to let the wheels hang in the air.

## Precautions for Battery Use

1. Transmitter uses 2x1.5V "AA" batteries.
2. Please pay attention to correct polarity when replacing batteries.
3. Rechargeable batteries should be charged under adult supervision.
4. Do not mix old and new batteries. Do not mix alkaline, standard (carbon-zinc), or rechargeable batteries.
5. After the battery is exhausted, the model should be removed.
6. Exhaust battery should be safety dispose!
7. DO NOT short circuit any terminals.
8. DO NOT attempt to recharge non rechargeable batteries.
9. Remove batteries from the model when charging.
10. DO NOT put batteries into a fire or into water.
11. The rated input voltage battery charger MUST be suitable for your mains power voltage.
12. During charging it is quite normal for the charger and batteries to heat up.
13. Do not swallow battery!
14. Store only in cool, dry and dark places and should be keep out of the children!
15. When the battery leaks the liquid and let it into you eyes, please right away rinse them and consult an ophthalmologist.

## Safety Precautions

- It is a radio control model, not a toy!
- In order to enjoy running the car, you need to finish assembly before operation. Do routine maintenance work after operation. Replacement parts and option parts are available separately.
- Improper usage with Alkaline cells or rechargeable batteries may damage the electronics for the car or the radio.

## In order to operate the car safely. Be sure that you have observed the following points:

⚠ Please follow the points as below in order to prevent accident from happening to the car and people.



●Be sure to read thoroughly the manual before you begin. Fresh user should seek advice from people having rich experience in order to assemble the model correctly.



●Cutters, nippers and screwdrivers need careful handling.



●As the product contains small and sharp parts, assemble and store this product only in places out of the reach of children.

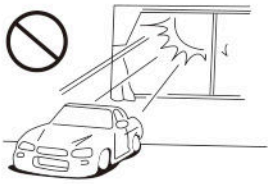

●Do not expose this model to high temperature, humidity or direct sunlight.

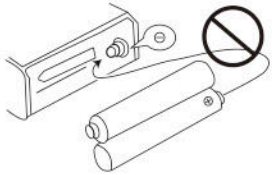

●Never reverse connection/ disassemble the battery. This may lead to damage and leakage.

●When the model is not in use, always turn off the receiver and transmitter. Further more, disconnect the batteries and remove them from the model and the transmitter. This may be dangerous such as overheat and leakage.

## Operating Your Model Safely

⚠ Do NOT operate the model in the following places and situations. (Non-observance may lead to accident!)

●Operate your model in spacious and safe areas! Do not operate it:

1. On road!
2. In places where children and many people gather.
3. In residential districts and parks!
4. Do not operate the model on public roads, in crowded places and near infant as it may cause accidents.
5. Indoors and in limited space! Non-observance may result in personal injury and property damage!

●The car must stop immediately and check for the reasons when it is operating abnormal. As long as the problem is not cleared, do NOT operate it! This may lead to further trouble and unforeseen accidents!

●Always check the radio batteries! With weak dry batteries, transmission and reception of the radio would fall off. You may lose control of your model in such condition. This may also cause serious accidents!

●Keep in mind that people around you may also operate a radio control model! NEVER share the same frequency with somebody else at the same time! Otherwise, Radio signals will be mixed up and you will lose control to your model. This may lead to accidents.

●Do NOT put fingers or any objects inside rotating and moving parts!

●Right after use, do NOT touch the motor! Danger of burning yourself!

## FCC PART 15 B Notice:
## CAUTION

Warning: Changes or modifications to this unit not expressly approved by the party responsible for compliance could void the user's authority to operate the equipment.

NOTE: This equipment has been tested and found to comply with the limits for a Class B digital device, pursuant to Part 15 of the FCC Rules. These limits are designed to provide reasonable protection against harmful interference in a residential installation. This equipment generates, uses and can radiate radio frequency energy and, if not installed and used in accordance with the instructions, may cause harmful interference to radio communications.

However, there is no guarantee that interference will not occur in a particular installation. If this equipment does cause harmful interference to radio or television reception, which can be determined by turning the equipment off and on, the user is encouraged to try to correct the interference by one or more of the following measures:

- Reorient or relocate the receiving antenna.
- Increase the separation between the equipment and receiver.
- Connect the equipment into an outlet on a circuit different from that to which the receiver is connected.
- Consult the dealer or an experienced radio/TV technician for help.

This device complies with Part 15 of the FCC Rules. Operation is subject to the following two conditions:

(1) this device may not cause harmful interference, and

(2) this device must accept any interference received, including interference that may cause undesired operation.

# 电池使用注意事项

1. 遥控器使用2节1.5V“AA”号电池;
2. 安装或更换电池时请注意极性;
3. 充电电池只能在成人监护下充电;
4. 不可混用新旧或不同型号的电池;
5. 电池电量用尽后,应从模型内取出;
6. 将耗尽电量的电池交给专门的环保部门处理!
7. 接线端不应短路;
8. 非充电电池不可充电;
9. 充电电池充电前应从模型中取出;
10. 请不要将坏的电池、电池组分解或扔到火中、水里,以免发生意外;
11. 充电器的额定输入电压必须与当地的家用电压相符;
12. 在充电过程中,充电器和电池出现微温,属于正常现象;
13. 不可吞咽电池!
14. 将电池放在凉爽、干燥避光及小孩接触不到的地方!
15. 电池漏液而且滴到眼睛里,请马上用大量的清水清洗,然后到附近的医院就医。

# Power Switch 开关

1. Turn on the power switch of the transmitter, the signal indicator light of transmitter flashes.
2. Press the power button of high speed car, which is on the side of the ESC; the indicator light of high speed car flashes.
3. When the indicator light stays on, the high speed car can be operated to play.

1. 打开遥控器电源开关，遥控器信号指示灯闪烁。
2. 按下高速车电调侧面的电源开关按钮，高速车指示灯闪烁。
3. 当指示灯变为常亮后，便可操控高速车。

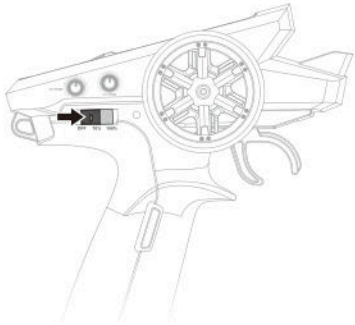

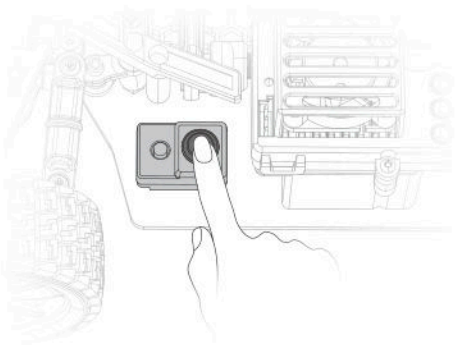

⚠
- When turn on the transmitter, please DO NOT touch the throttle and steering. After turn on the transmitter's power, please operate after the indicator light of transmitter staying on.
- Please comply the principle of “turn on the transmitter firstly, then turn on the high speed car”.
- In the frequency matching, please make sure there is only one pair of transmitter and high speed car in matching at the same time, otherwise the frequency will match wrongly.

- 当准备开启遥控器时，请勿触动油门和转向。打开遥控器开关，遥控器指示灯点亮后才能进行操作。
- 开机时应遵循“先开启遥控器，再开启高速车”的原则。
- 在同一时刻，请确保对码的遥控器和高速车只有一对，否则会对错遥控器。

# R3B Receiver 接收器

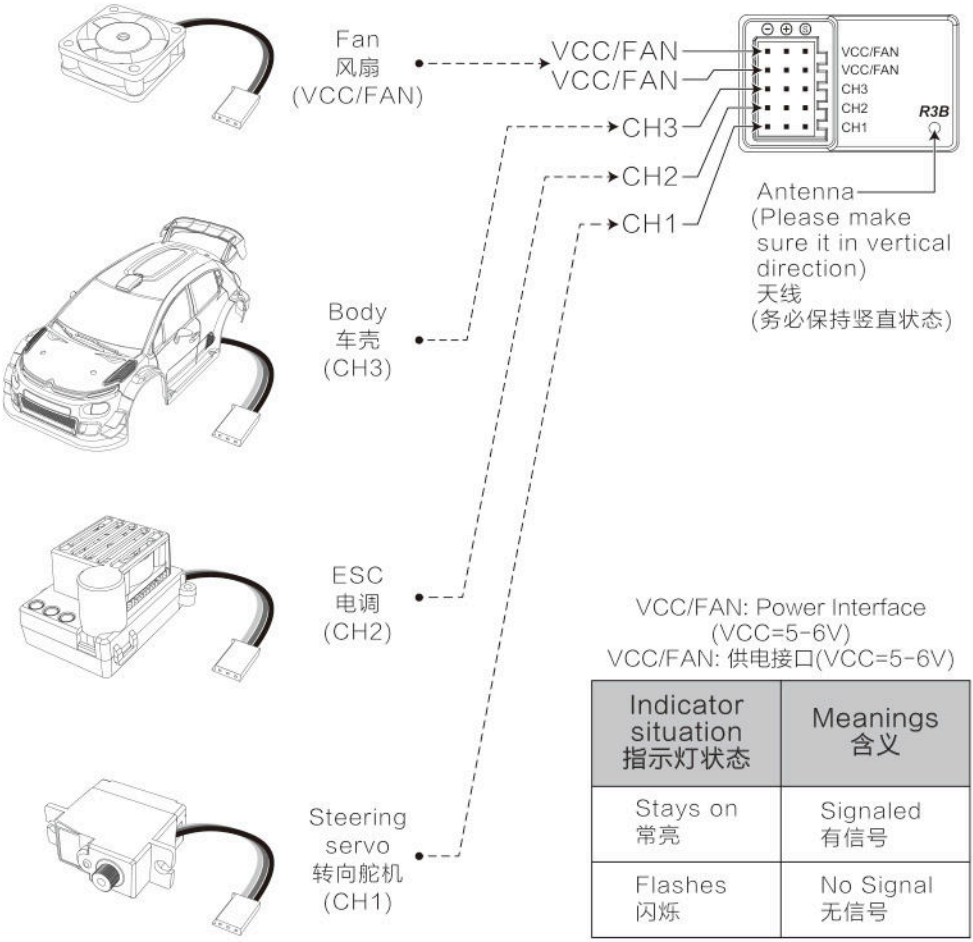


VCC/FAN: Power Interface
(VCC=5-6V)
VCC/FAN: 供电接口(VCC=5-6V)

| Indicator situation 指示灯状态 | Meanings 含义 |
|---|---|
| Stays on 常亮 | Signaled 有信号 |
| Flashes 闪烁 | No Signal 无信号 |

⚠ Warning: Please make sure the connection is correct.
警告：请注意连接是否正确。

# G3 Gryo 陀螺仪

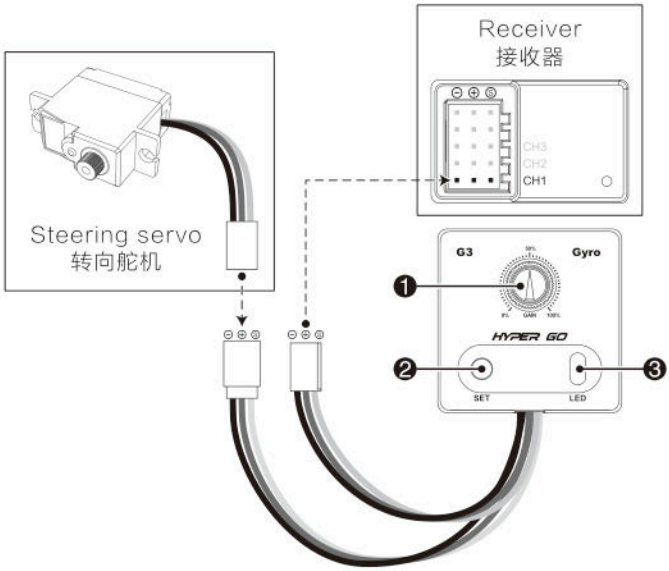


## ①GAIN

Spin the knob from the left to right, the gyro intervention gains value 0-100%.
旋钮从左到右调整陀螺仪介入增益值0-100%。

## ②SET 设置

### 1. Reverse/Normal Switching 正反向切换

When the power on, long press the【SET】3 seconds, the LED from red to green or from the green to red, it means the switch is successful. (Red LED is on for Normal, Green LED is for Reverse)
通电状态下，长按3秒【SET】，LED颜色由红色变为绿色，或者由绿色变为红色，则代表已切换成功。(LED红色常亮为反向，LED绿色为正向。)

⚠ The default direction of servo is Reverse. If not modified, please keep the red constant LED light as normal state.
车辆标配的舵机方向为反向。如未做改装，请保持LED正常状态为红色常亮。

### 2. EPA (End point adjustment) 行程调节

⚠ Before setting, please make sure the gyro direction is the same as the direction of vehicle steering.
设置前请先确定陀螺仪方向与车辆转向的方向相同。

a. Before power on, press and hold【SET】, then turn on the vehicle power (please release【SET】ASAP after turning on the power, if more than 5 seconds, it will restore the factory setting), LED red flashing, it enters into the EPA setting.
b. Rotate the remote control rudder, turn the rudder to the desired position (to the left or right), keep the current state, short press【SET】then the green LED flashing, it completes the single-side EPA setting.

c. Rotate the remote control direction rudder to turn the servo to the desired position in another direction and keep the current state, short press【SET】and the red and green LEDs will flash (about 2 seconds). When the LEDs will be on, the EPA setting is finished.

*Restore factory setting: Before power on, press the【SET】, then hold for 5 seconds after power on, the red LED and green LED will flash at the same time, then return to default setting (default 1100us-1900us).

a.通电前，按住【SET】，然后开启车辆电源（开启电源后请松开【SET】，如超过5秒，则会恢复出厂设置），LED红色快闪进入EPA 设置。

b.旋转遥控器方向舵，将舵机转到所需要的位置上（可向左边或右边），保持当前状态，短按“SET”后绿色LED快闪，完成单侧EPA设置。

c.旋转遥控器方向舵使舵机转到另一个方向所需要的位置并保持当前状态，短按“SET”后红色与绿色LED快闪（约2秒）。LED变为常亮状态，EPA设置完成。

*恢复出厂设置：通电前，按住【SET】通电后持续5秒，红色LED与绿色LED同时快闪后恢复成默认设置（默认1100us-1900us）。

## ③LED status 灯状态

| LED | Status<br>状态 |
|---|---|
| Power on fast flashing<br>开机快闪 | Gyro initialization (time about 2 seconds).<br>陀螺仪初始化（时间约为2秒） |
| Slow flashing<br>慢闪 | No Transmitter signal.<br>无遥控信号 |
| Red on<br>红色常亮 | Working，gyro direction is Reverse.<br>正常工作中，陀螺仪方向为反向 |
| Green on<br>绿色常亮 | Working，gyro direction is Normal.<br>正常工作中，陀螺仪方向为正向 |
| Fast Flashing<br>快闪 | In EPA Setting.<br>EPA行程设置状态 |

# E45P Brushless ESC 电调

⚠ Please Do Not forcible/reversely insert all sockets.
所有插座请勿强行反插。

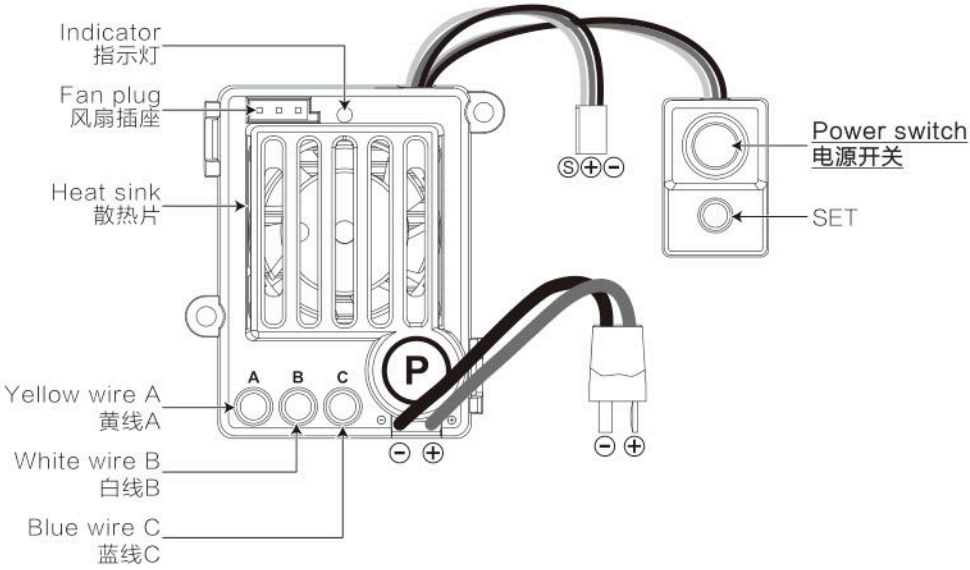


| Indicator light situation<br>指示灯状态 | Meanings<br>含义 |
|---|---|
| Stays on<br>常亮 | Signaled<br>有信号 |
| Flash quickly<br>快闪 | a. No signal<br>无信号<br>b. Pull the trigger<br>扣动扳机 |
| Flash slowly<br>慢闪 | Low voltage<br>低电压 |
| Flash twice<br>闪两下 | Over heat protection<br>过热保护 |
| Off<br>熄灭 | Stuck protection<br>堵转保护 |

# Set the throttle range (Transmitter calibration)
# 设定油门行程（遥控器校准）

When replacing the transmitter with a new one, it is recommended to reset the throttle range, otherwise the ESC may become inoperable or abnormal.
当更换新的遥控器时，建议重新设置油门行程，否则可能会导致ESC无法使用或异常。

## ESC enters "the throttle range" state:
## ESC进入油门行程校准模式：

1. Turn on the transmitter, adjust the throttle trim to the middle position, and keep the status of "D/R","EPA","ATL" and other parameters of the throttle channel of the transmitter at 100%;
   打开遥控器，将油门微调调至中间位置，同时请保持遥控器油门通道的"D/R"、"EPA"、"ATL"等参数状态为100%；
2. The ESC is connected to the battery, but in the off state, keep holding down the【SET】state, short press ON/OFF, the LED on the ESC will start to flash, and at the same time, the motor will start to chirp, at this time, you can release the【SET】button. The red light on the ESC is in the fast-flashing state, and it has entered "the throttle range" state.
   电调连接电池，但处于关闭状态，保持按住【SET】状态，短按ON/OFF，电调上LED开始闪烁，同时电机开始鸣叫，此时即可松开【SET】按键。电调红灯处于快闪状态，已进入油门行程校准状态。




## Calibration steps (please follow the order):
## 校准步骤 (请按照顺序进行)：

1. Keep the transmitter throttle in the mid-point position, press【SET】once, the red light of ESC goes out and the motor "Di", indicating that the mid-point position has been successfully stored;
   保持遥控器油门处于中点位置，按一次【SET】，ESC红灯熄灭，电机"Di"，表明已成功储存中点位置；

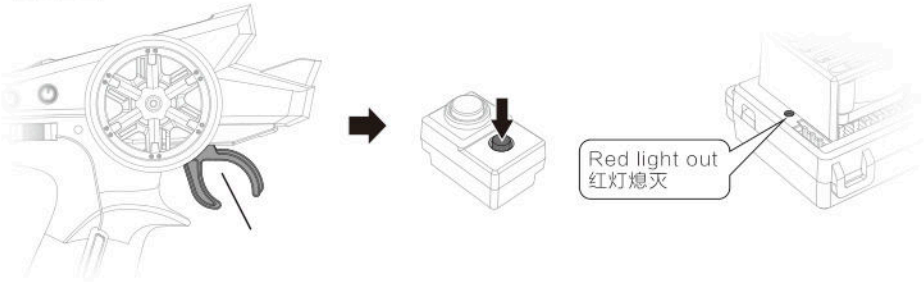

2. Keep the throttle of the transmitter in the maximum forward position, press【SET】once, the red light of ESC flashes twice and then goes out, the motor "Di.Di", indicating that the maximum forward position has been successfully stored;
保持遥控器油门处于最大前进位置，按一次【SET】，ESC红灯闪烁2次后熄灭，电机"Di.Di"，表明已成功储存最大前进位置；

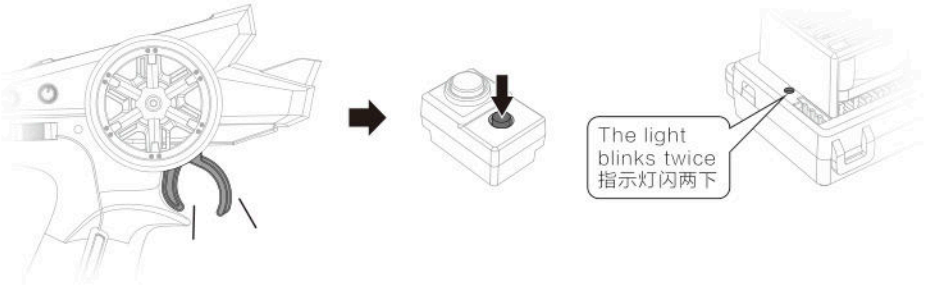


3. Keep the transmitter throttle in the maximum backward position, press【SET】once, ESC red light blinks 3 times and then goes out, motor "Di.Di.Di", indicating that the maximum backward position has been successfully stored.
保持遥控器油门处于最大后退位置，按一次【SET】，ESC红灯闪烁3次后熄灭，电机"Di.Di.Di"，表明已成功储存最大后退位置。

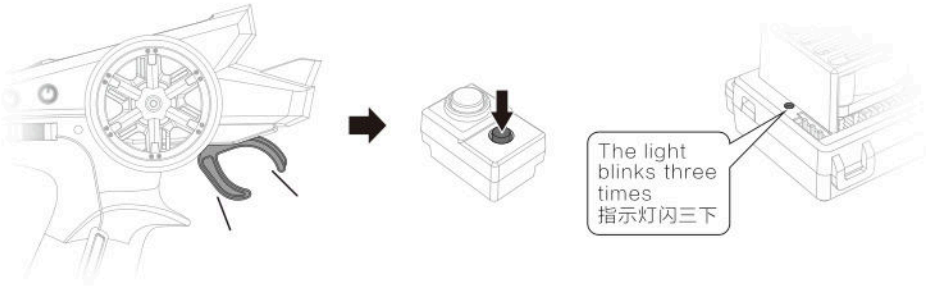


After completing the above three steps, it means the calibration has been completed. When the transmitter throttle returns to the centre position, the ESC can work normally.
完成以上三个步骤后，代表校准已完成。遥控器油门回到中点位置时，ESC即可正常工作。

It is recommended to perform a throttle travel calibration when starting a new vehicle to get the most accurate experience.
建议新车入手时，进行一次油门行程校准，以获得最精准的体验。

## Throttle range back to initial setting
## 油门行程恢复初始设置

When the ESC is powered on, press and hold【SET】for 5 seconds, the motor will emit "Di.Di", the ESC indicator light will flash twice, and the throttle range will be restored to the initial setting.
在ESC通电并开启状态下，长按【SET】5秒，电机发出"Di.Di"，ESC指灯闪两下，油门行程恢复为初始设置。

# T3B Transmitter 遥控器

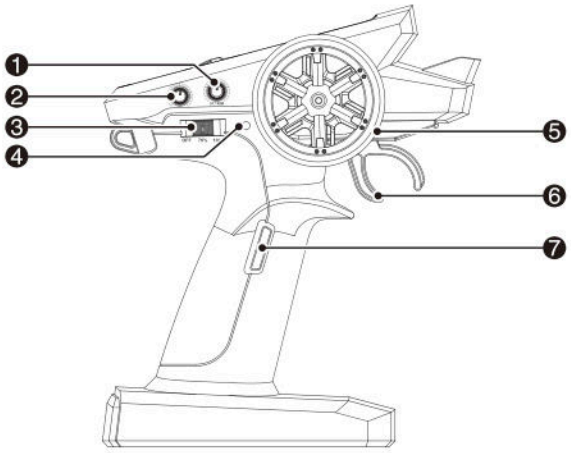


①ST.TRIM
(Steering servo trimmer)
ST.TRIM（转向舵机微调）

②TH.TRIM（Throttle trimmer)
TH.TRIM（油门中位微调）

③Power switch
电源开关
(OFF-70%TH-100%TH)

④Indicator light
指示灯

⑤CH1：ST（Steering)
CH1：ST（转向）

⑥CH2：TH（Throttle)
CH2：TH（油门）

⑦Fn（CH3 Light control)
Fn（CH3灯控）

## ①ST.TRIM (Steering servo trimmer 转向舵机微调)

If the car cannot go straightly during driving, it can be adjusted through the ST.TRIM.
车辆行驶过程中如无法直线行驶，可通过此微调进行调整。

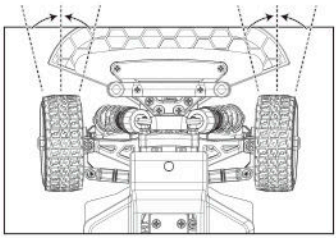

## ②TH.TRIM (Throttle trimmer 油门中位微调)

If the car can't be stop when the TH in the middle place, you can adjust the button to stop the car.
如TH（油门）在中位状态下，车辆无法正常停止，可通过此微调进行调节，使车辆停止。

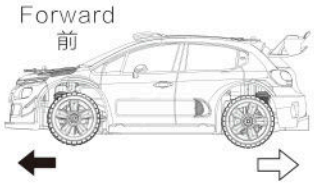

## ③Power/Speed switch
## 电源/速度档位开关

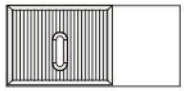


OFF (关)

70% (70% Throttle) (70%油门)

100% (100% Throttle) (100%油门)

## ④Indicator light
## 指示灯

| | |
|---|---|
| Stays on<br>常亮 | Working well<br>正常 |
| Flash quickly<br>快闪 | Frequency mating<br>对码状态 |
| Flash slowly<br>慢闪 | Low battery of transmitter<br>遥控器电池电量低 |

## ⑤CH1: ST (Steering 转向)

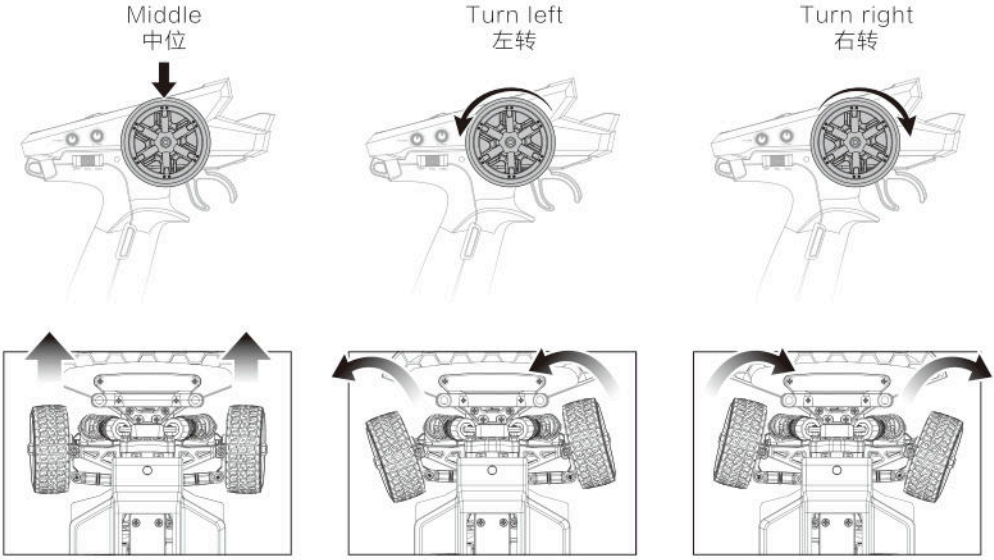


## ⑥CH2: TH (Throttle 油门)

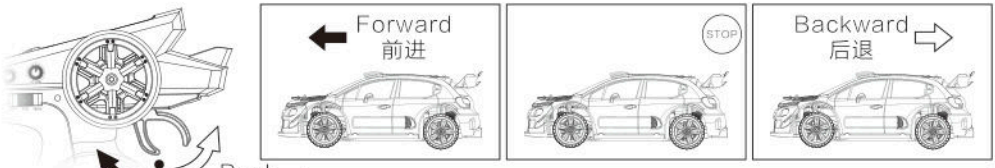


Brake: When the car is going forward, pull the transmitter trigger back, and the car enters into the braking state. After the trigger is in the middle, push back again, and the car can move backward.

刹车：当车辆向前行驶时，遥控器推动后退，车辆进入刹车状态，需油门归中后，再次推动后退，车辆才能后退。

*When the car is in reverse situation, it does not the brake function.
车辆处于后退状态下，无刹车功能。

## ⑦Fn (CH3 Light control 灯控)

Short Press the “ ” button to turn on/off the light of high speed car.
短按“ ”按键时，控制高速车灯光开启或关闭。



# Install the Transmitter’s Battery
# 遥控器安装电池

Open the transmitter’s battery cover, insert 2 AA batteries according to the indicated positive and negative direction, close the battery cover.
将遥控器电池盖打开，按照遥控器指示的正负极，正确装入2节AA电池，再重新盖上电池盖。

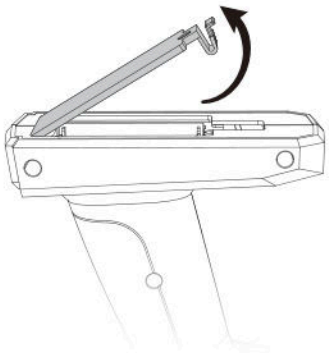

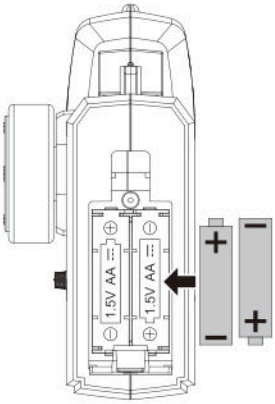


## Charge 充电

It is recommended to use a 5V 2A adapter for charging.
- When charging, the indicator light of charger is green and flashes;
- When the battery is fully charged, the green indicator light of the charger stays on.

建议使用5V 2A USB适配器进行充电。
- 电池充电时，充电器绿色指示灯闪烁；
- 电池满电时，充电器绿色指示灯常亮。

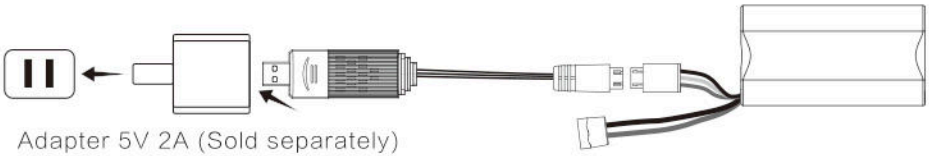

Adapter 5V 2A (Sold separately)
适配器5V 2A (需另购)

# Install the dust-proof cover 安装防尘罩

1. Align the 3 holes of the cover with the bracket and install.
将防尘罩3个孔位对准防尘罩支架装入。

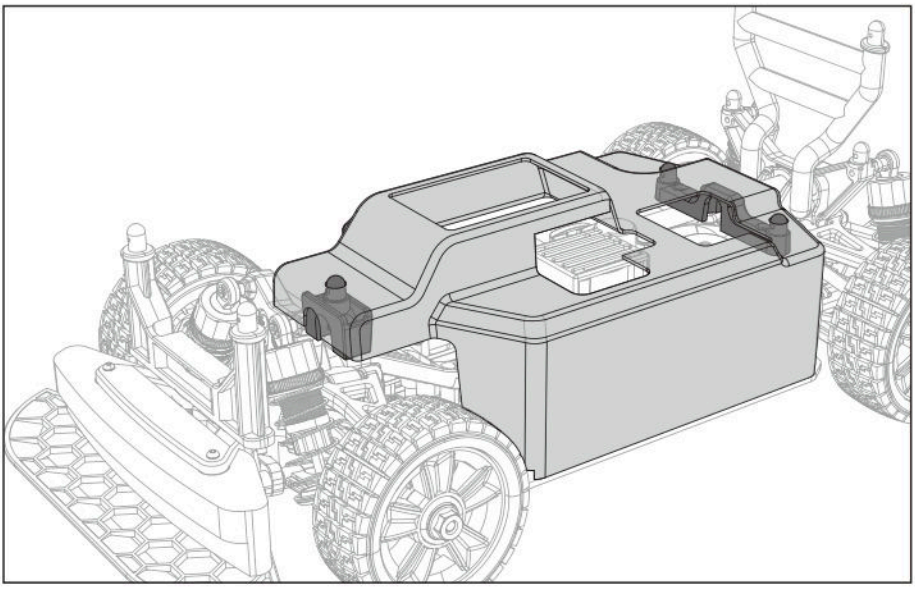

2. Insert the 3 shell buckles into the cover and lock.
将3个车壳扣插入锁紧防尘罩。

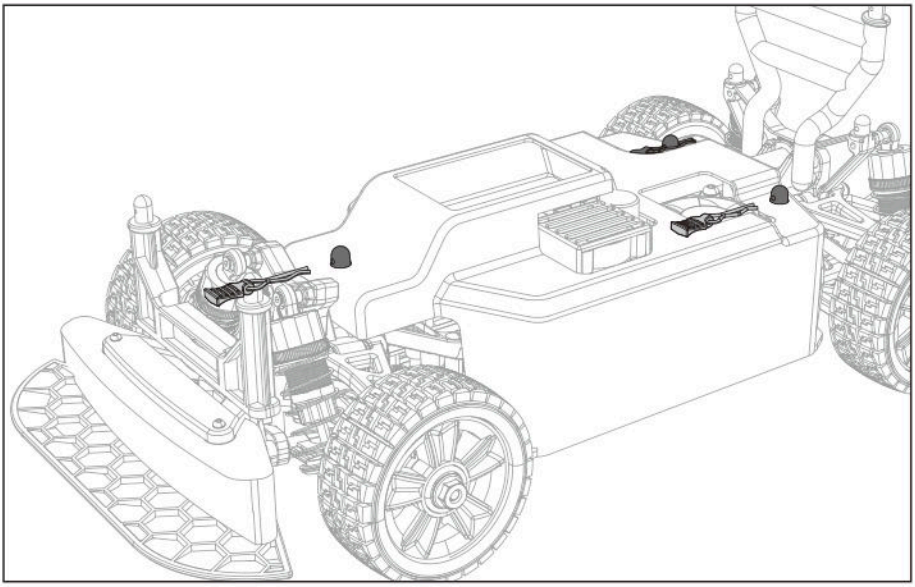

# Install Car Shell 安装车壳

1. Aline the 4 holes of the car shell with holders, then install it.
将车壳4个孔位对准车壳支架装入。

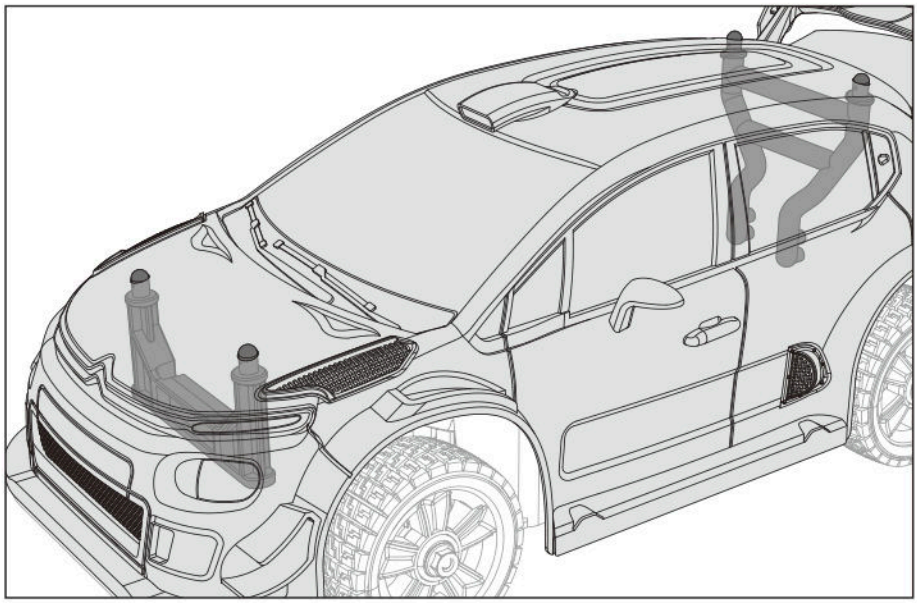

2. Insert the 4 clips into the holes to lock the car body.
将4个车壳扣插入锁紧车壳。

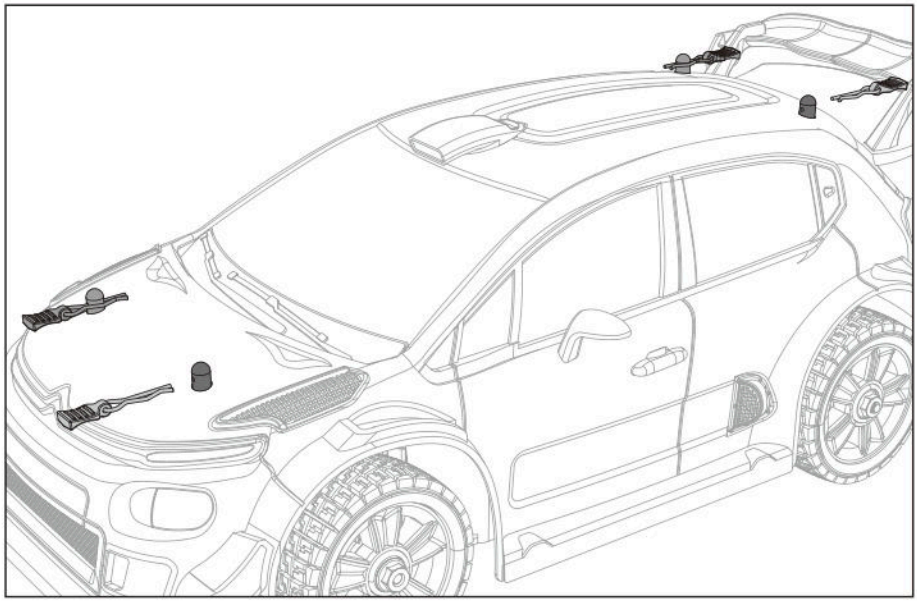

## 14200 Front Swing Set 前摆臂组件

Screw 螺丝:

HKB26125 Ø2.6x12.5mm 2PCS

Screws
沉头螺丝

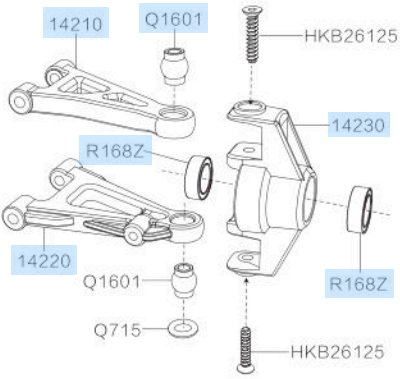


14200

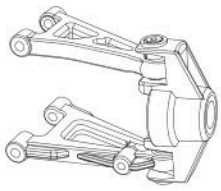

Bearing 轴承:

R168Z 2PCS

Ball bearing
滚珠轴承

Pivot balls 球头:

Q1601 2PCS

Steering pivot balls
球头

## 14201 Rear Swing Set 后摆臂组件

Screw 螺丝:

HKB2312 Ø2.3x12mm 1PCS

Screws
沉头螺丝

Bearing 轴承:

R168Z 2PCS

Ball bearing
滚珠轴承

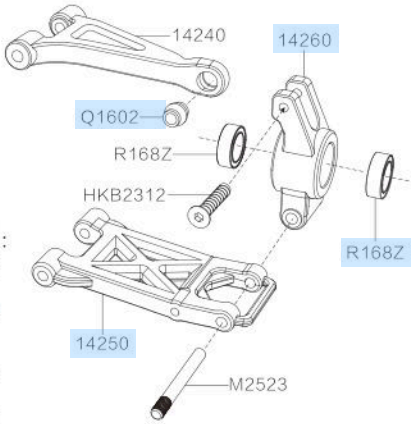


14201

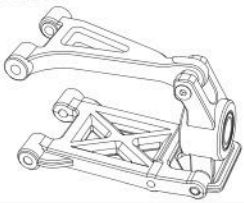

Rear hub pins 单花轴:

M2523 1PCS

Rear hub pins
后固定座插销

Pivot balls 球头:

Q1602 1PCS

Steering pivot balls
球头

## 14400Y Metal Gears Main Driving Set 全金属主传动组件

Bearing 轴承:

R168Z 2PCS

Ball bearing
滚珠轴承

R1810 2PCS

Ball bearing
滚珠轴承

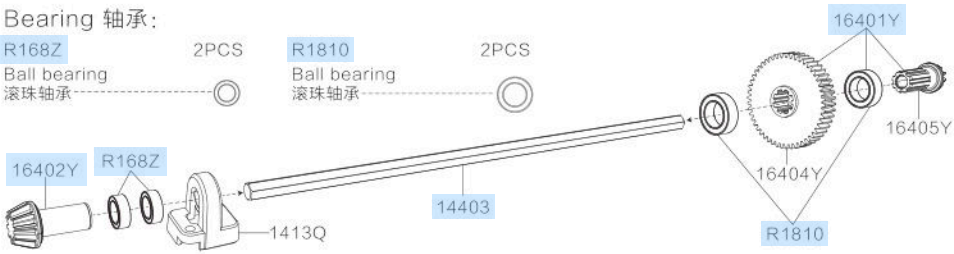


14400Y



1413Q



# 16420Y Metal Gears Diff Assembly 全金属齿轮差速箱

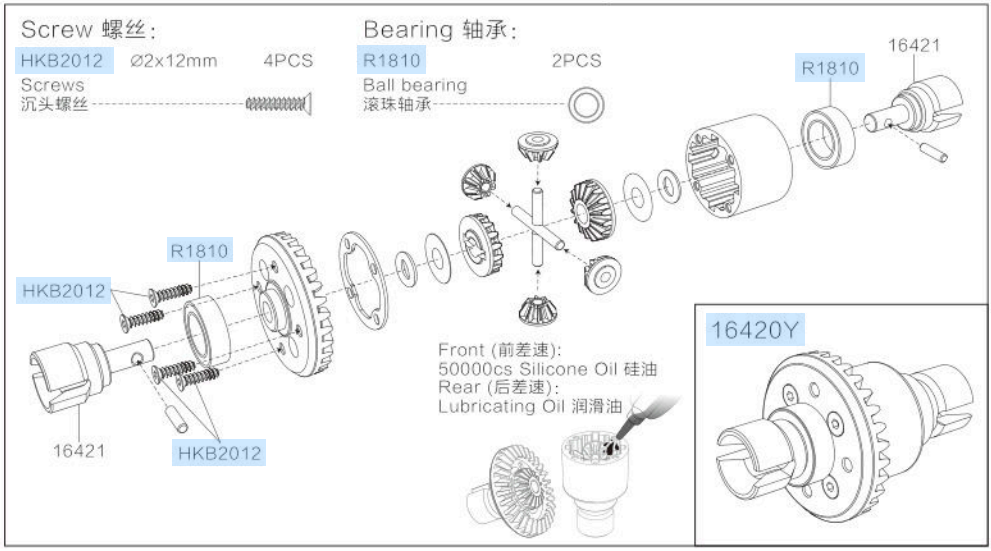


# 14500 Oil Filled Shock 油压避震

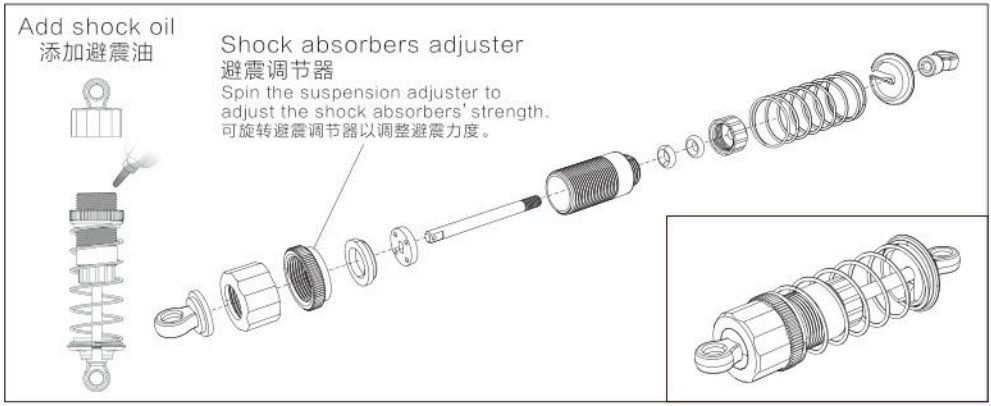


# 14700 Servo Assembly 舵机组件

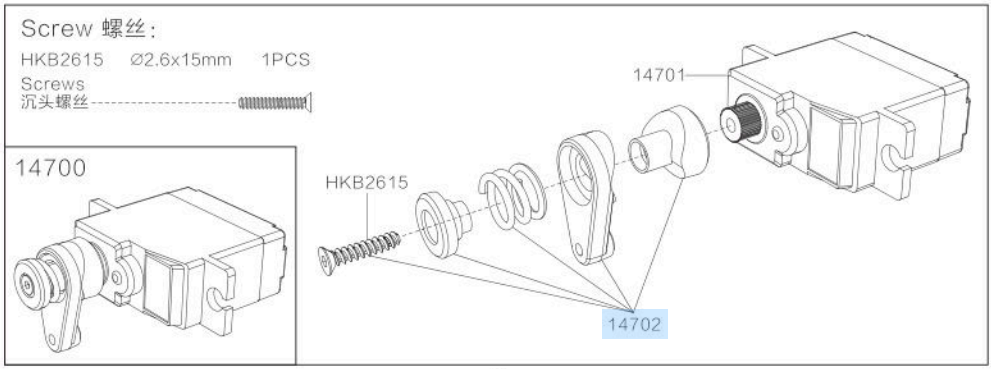

# B284K & 16397 Motor Assembly 电机组件

Screw 螺丝:

HTM3060 Ø3x6mm 2PCS
Screws
半圆头机丝螺丝

HTB3015 Ø3x15mm 2PCS
Screws
半圆头螺丝

M3030 Ø3x3mm 1PCS
Hexagon socket machine screw
内六角机丝螺丝

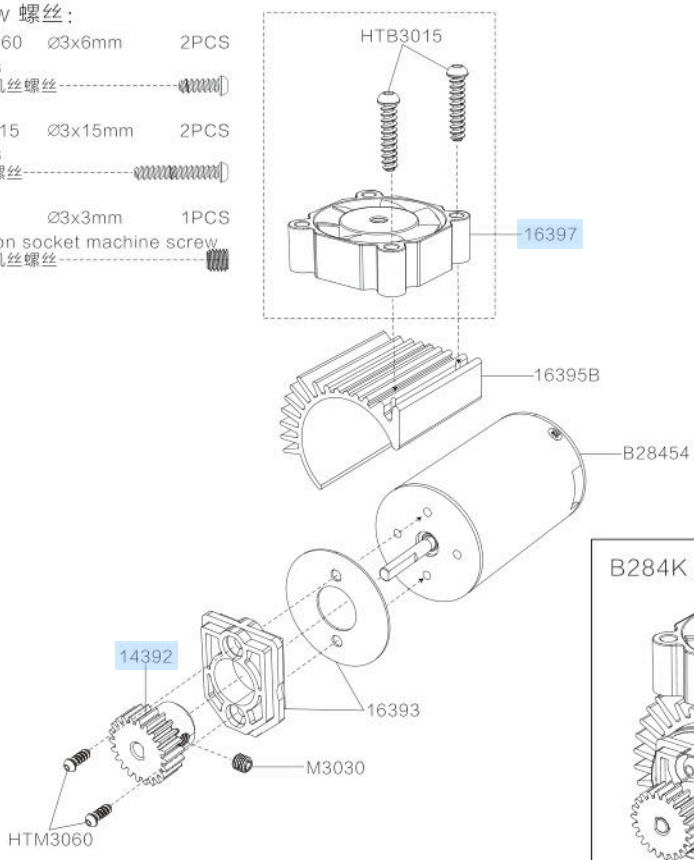


B284K & 16397

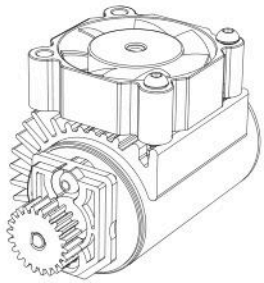

# 14430 Steering Assembly 转向传动组件

Screw 螺丝:

HKB2312 Ø2.3x12mm 4PCS
Screws
沉头螺丝

HKB2012 Ø2x12mm 2PCS
Screws
沉头螺丝

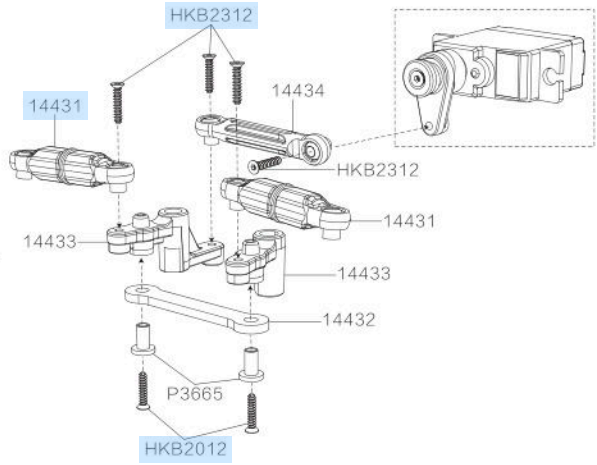


14430

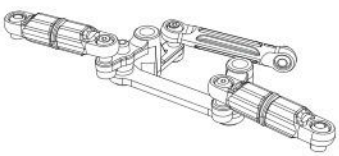

# 14100L3 Front Bumper Assembly 前防撞组件

Screw 螺丝:

HTB2615 Ø2.6x15mm 4PCS

Screws
半圆头螺丝

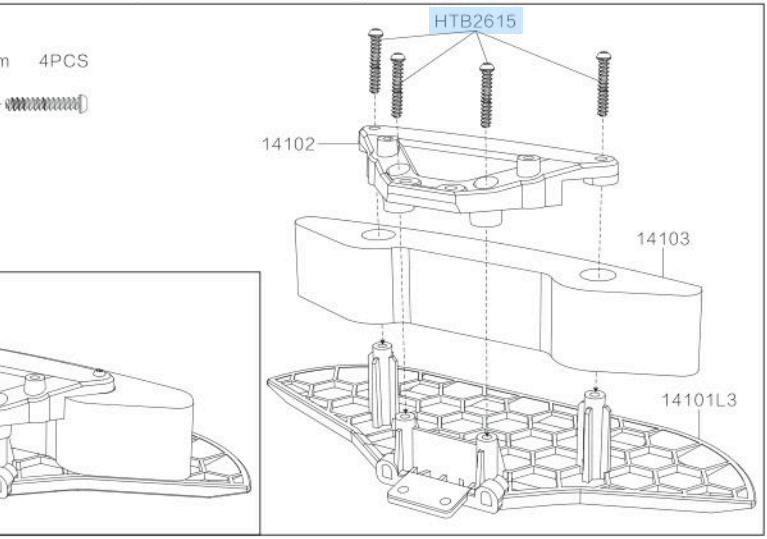


14100L3



# 14110L3 Rear Bumper Assembly 后防撞组件

Screw 螺丝:

HTB2660 Ø2.6x6mm 2PCS

Screws
半圆头螺丝

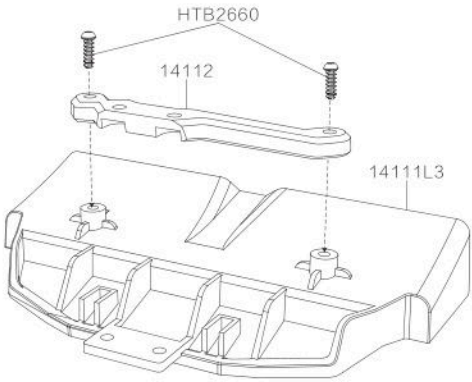


14110L3

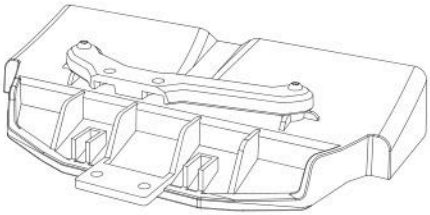

# High Speed Car Assemble 高速车总装

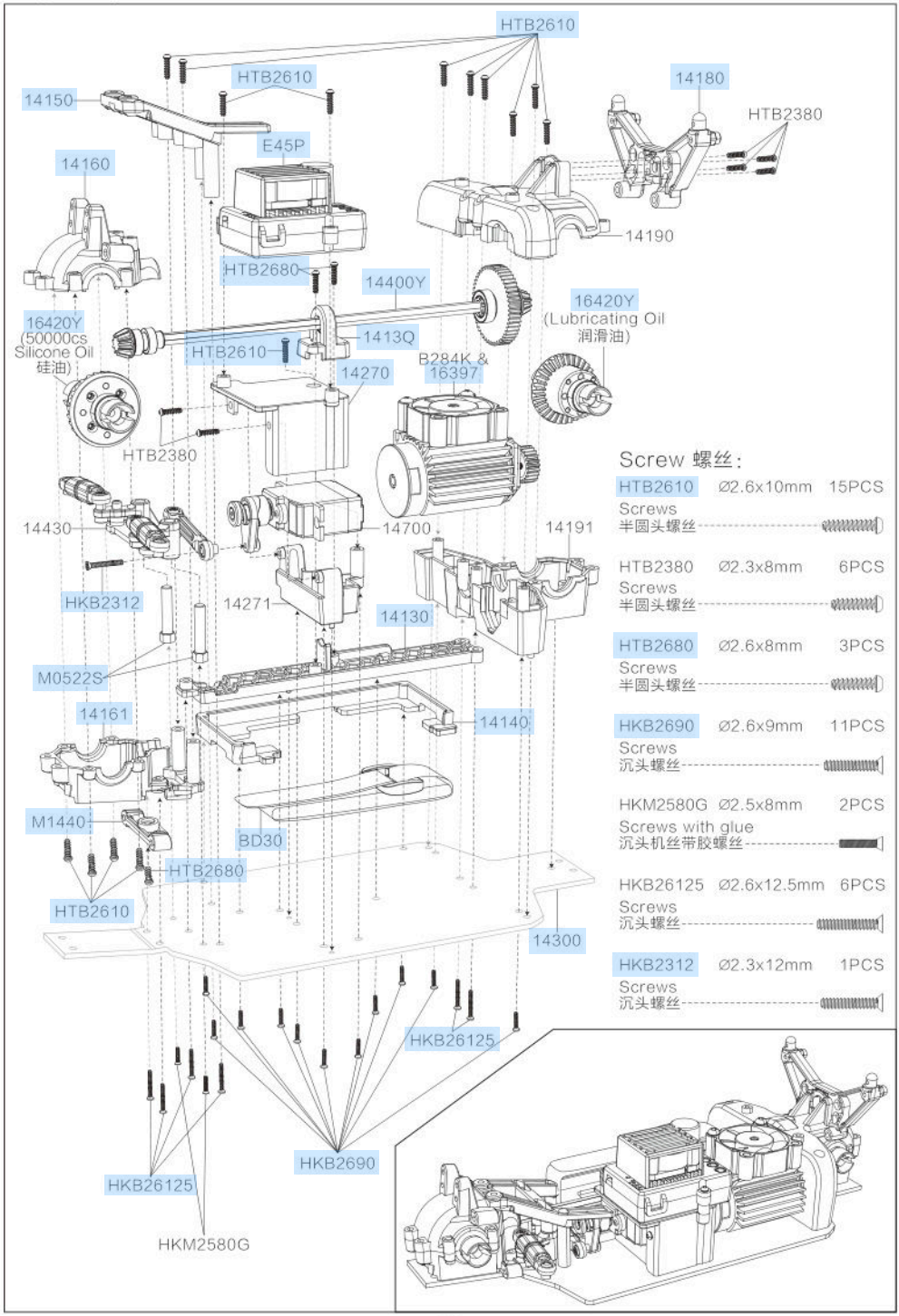


Screw 螺丝:

| | | |
|---|---|---|
| HTB2610 | Ø2.6x10mm | 15PCS |
| Screws 半圆头螺丝 | | |
| HTB2380 | Ø2.3x8mm | 6PCS |
| Screws 半圆头螺丝 | | |
| HTB2680 | Ø2.6x8mm | 3PCS |
| Screws 半圆头螺丝 | | |
| HKB2690 | Ø2.6x9mm | 11PCS |
| Screws 沉头螺丝 | | |
| HKM2580G | Ø2.5x8mm | 2PCS |
| Screws with glue 沉头机丝带胶螺丝 | | |
| HKB26125 | Ø2.6x12.5mm | 6PCS |
| Screws 沉头螺丝 | | |
| HKB2312 | Ø2.3x12mm | 1PCS |
| Screws 沉头螺丝 | | |

# High Speed Car Assemble 高速车总装

Screw 螺丝:

| | | | | | |
|---|---|---|---|---|---|
| HKB2312 | Ø2.3x12mm | 1PCS(2PCS) | HTHM3029 | Ø3x29mm | 4PCS |
| Screws 沉头螺丝 | | | Screws 半圆头半牙螺丝 | | |
| HTB2680 | Ø2.6x8mm | 8PCS | | | |
| Screws 半圆头螺丝 | | | | | |
| HTM4012 | Ø4x12mm | 2PCS | | | |
| Screws 半圆头机丝螺丝 | | | | | |
| HTB2610 | Ø2.6x10mm | 6PCS | | | |
| Screws 半圆头螺丝 | | | | | |

Iron shaft 铁轴:

| | |
|---|---|
| M25425 | 4PCS |
| Lower swing arm fixed shaft 下摆臂固定轴 | |

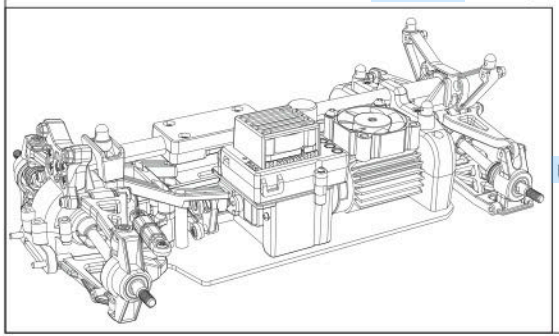

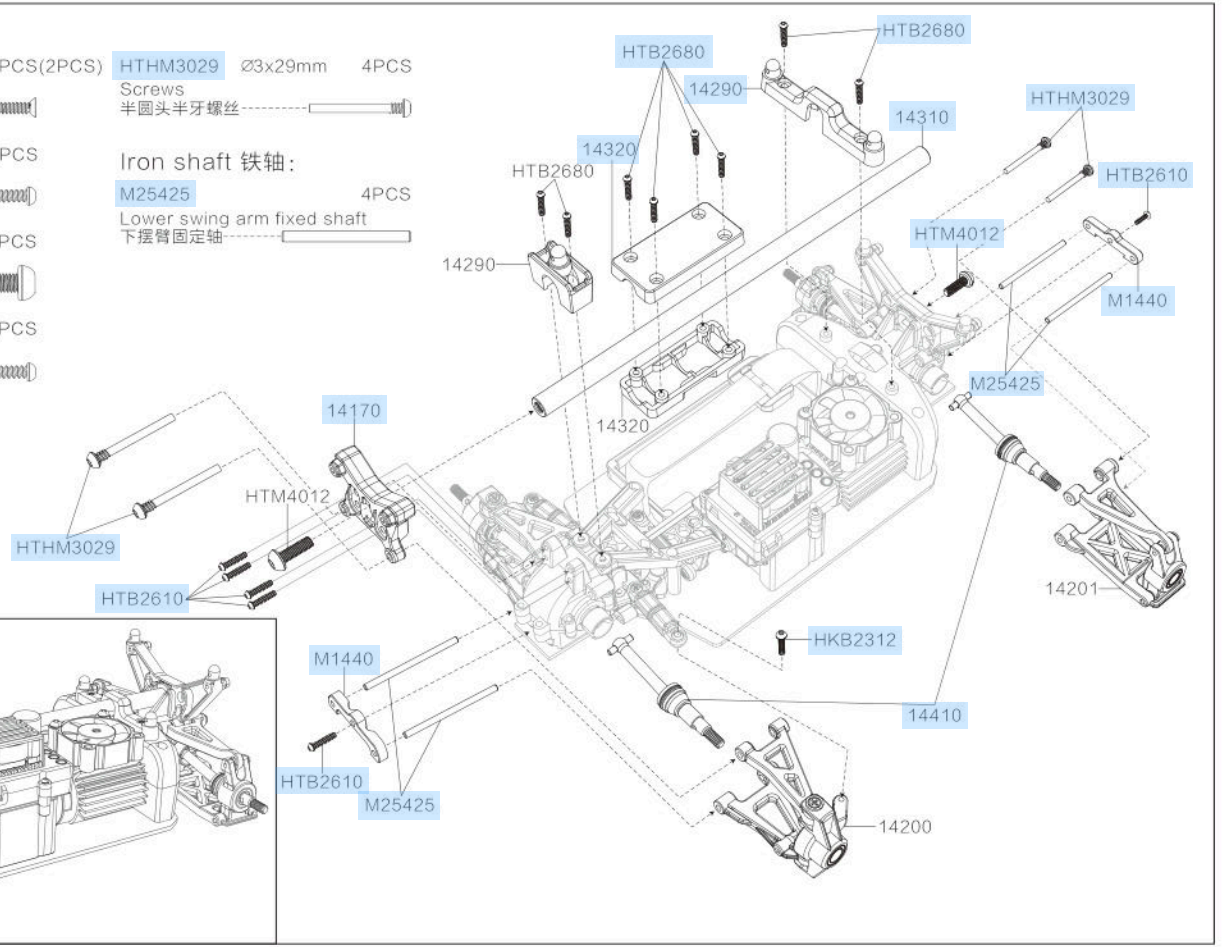

# High Speed Car Assemble 高速车总装

Screw 螺丝:

HKB2312 Ø2.3x12mm 4PCS(8PCS)

Screws
沉头螺丝

HTB2380 Ø2.3x8mm 4PCS

Screws
半圆头螺丝

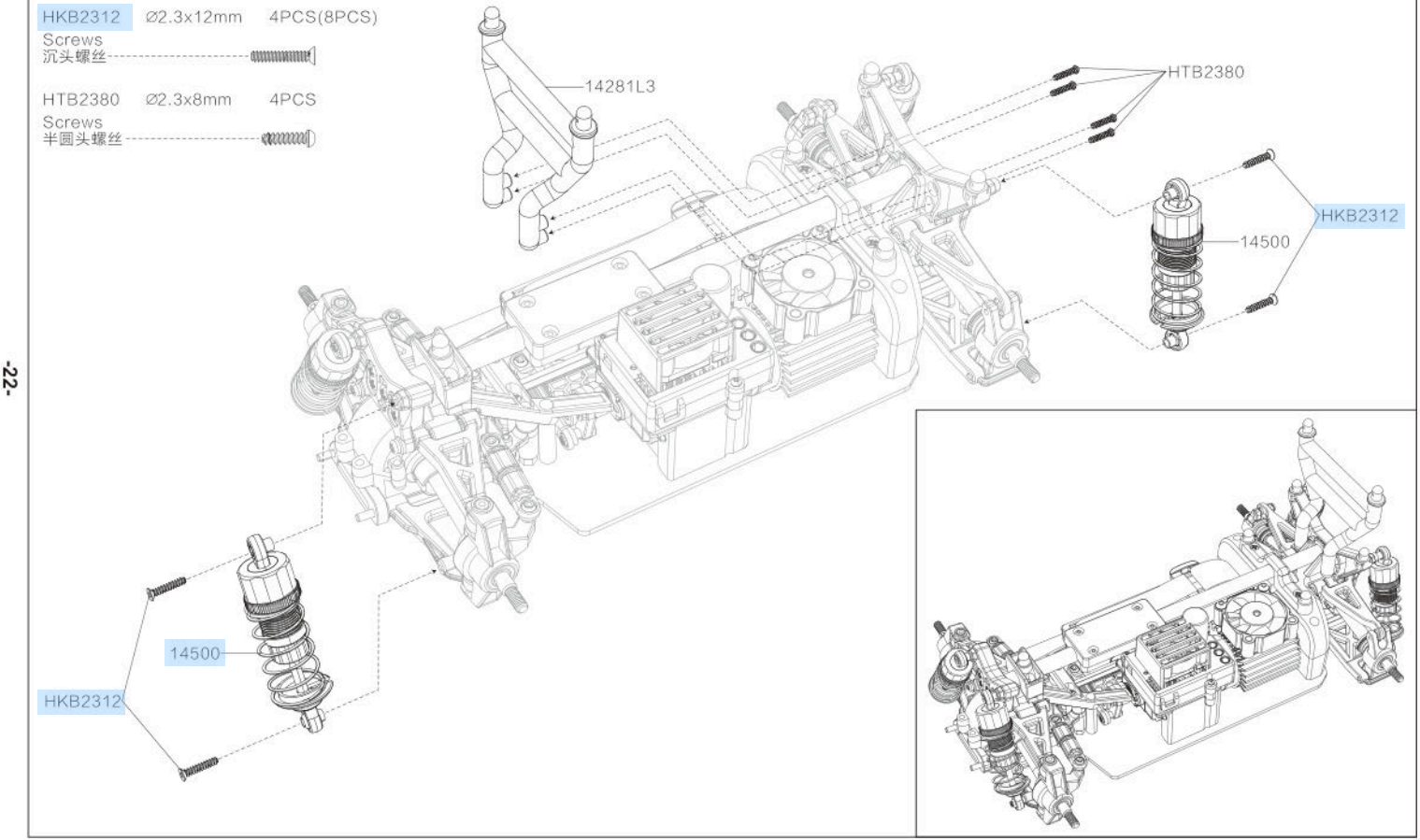

# High Speed Car Assemble 高速车总装

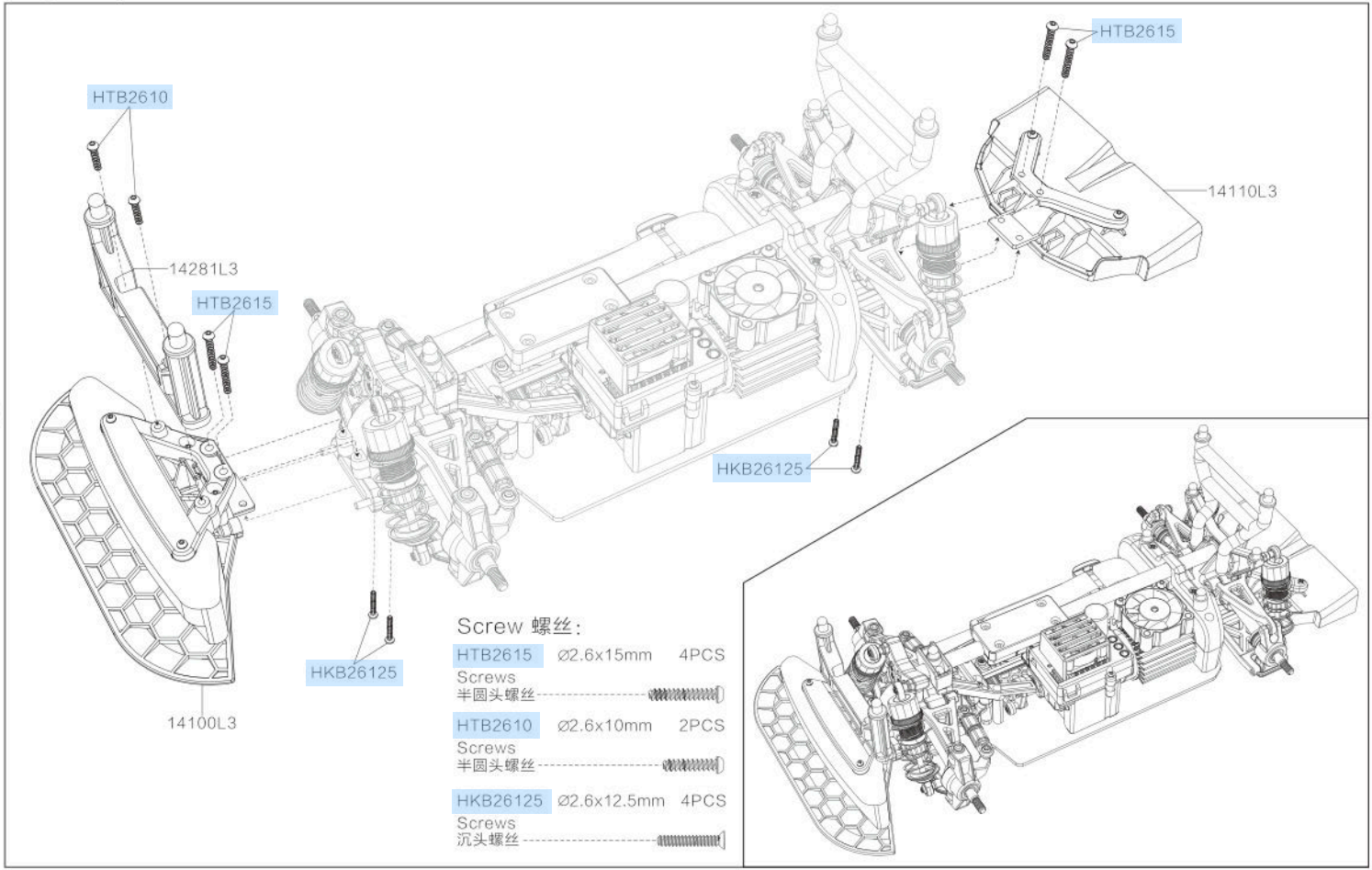


Screw 螺丝:

| | | |
|---|---|---|
| HTB2615 | Ø2.6x15mm | 4PCS |
| Screws 半圆头螺丝 | | |
| HTB2610 | Ø2.6x10mm | 2PCS |
| Screws 半圆头螺丝 | | |
| HKB26125 | Ø2.6x12.5mm | 4PCS |
| Screws 沉头螺丝 | | |

# High Speed Car Assemble 高速车总装

Iron shaft 铁轴:

M20101 1PCS ( 4PCS )

Wheel hex pins
六角套铁轴

16440 1PCS ( 4PCS )

Wheel hex
六角套

Nut 螺母:

M40 1PCS ( 4PCS )

M4 Wheel lock nut
M4螺母

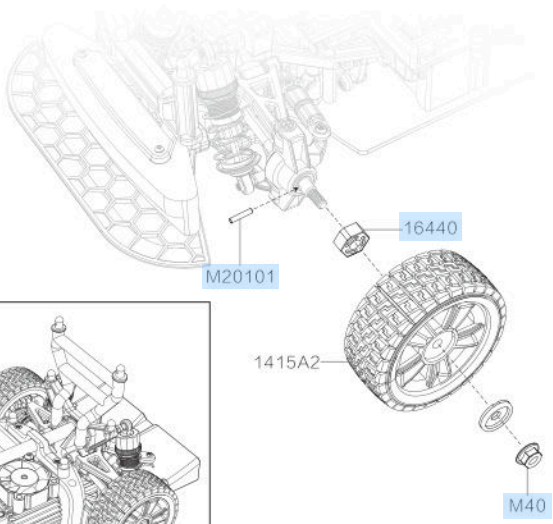


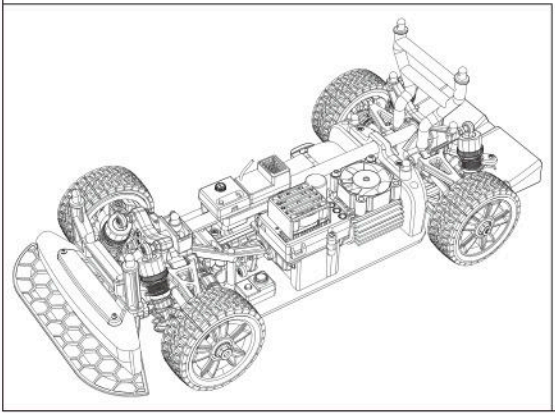



1415A2

Body Standard 车身标配
Hardness: Soft. Better abrasion resistance.
硬度：软，更好的耐磨性。



1415B2

Hardness: Medium. Average abrasion resistance.
硬度：中，耐磨性一般。



1415C

Hardness: High. Suitable for drifting.
硬度：高，适合漂移。

# Spare Parts 配件表

| | | | |
|---|---|---|---|
|  |  |  | 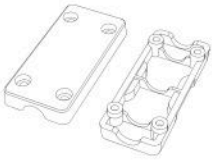 |
| 1430L3 | 14300 | 14310 | 14320 |
| Body<br>车壳组件 | Chassis<br>底盘 | Center Brace Bar<br>中支撑杆 | Center Shelf<br>中搁架 |
| 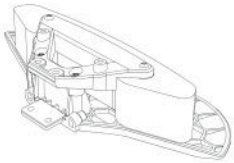 | 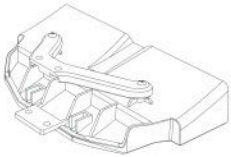 | 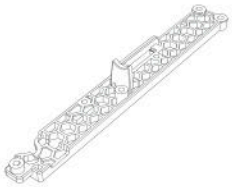 | 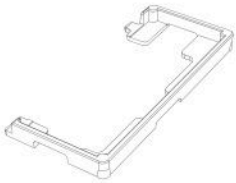 |
| 14100L3 | 14110L3 | 14130 | 14140 |
| Front Bumper Assembly<br>前防撞组件 | Rear Bumper Assembly<br>后防撞组件 | Chassis Parts<br>底盘配件 | Battery Clip<br>电池固定卡座 |
|  | 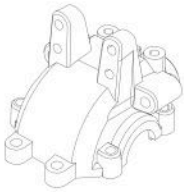 | 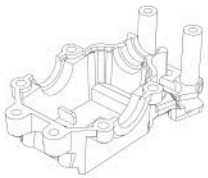 |  |
| 14150 | 14160 | 14161 | 14170 |
| Front Support Frame<br>前支撑架 | Front Upper Gearbox Covers<br>前齿轮盖 | Front Under Gearbox Covers<br>前差速底座 | Front Shock Tower<br>前避震架 |

# Spare Parts 配件表

| | | | |
|---|---|---|---|
| 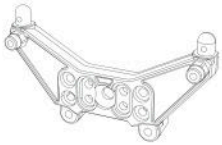 | 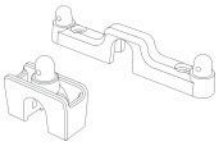 | 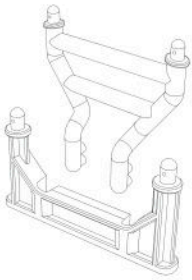 | 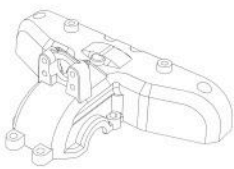 |
| 14180 | 14290 | 14281L3 | 14190 |
| Rear Shock Tower<br>后避震架 | Cover Body Pillars<br>防尘罩支架 | Body Pillars<br>车壳支架 | Rear Upper Gearbox Covers<br>后齿轮盖 |
| 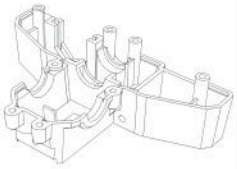 |  |  | 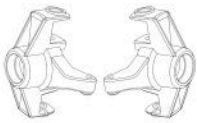 |
| 14191 | 14210 | 14220 | 14230 |
| Front Under Gearbox Covers<br>后差速底座 | Front Upper Suspension Arms<br>(Including Ball Head)<br>前上摆臂(含球头) | Front Lower Suspension Arms<br>(Including Ball Head)<br>前下摆臂(含球头) | Steering Block<br>转向座 |
|  |  |  |  |
| 14240 | 14250 | 14260 | M25425 |
| Rear Upper Suspension Arms<br>(Including Ball Head)<br>后上摆臂(含球头) | Rear Lower Suspension Arms<br>后下摆臂 | Rear Hubs<br>后固定座 | F/R Lower Swing Arm Fixed Shaft<br>下摆臂固定轴 |

# Spare Parts 配件表

| | | | |
|---|---|---|---|
|  | 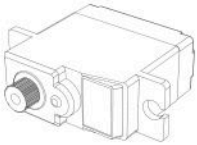 | 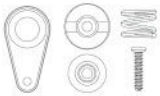 | 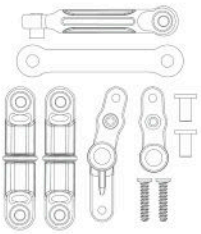 |
| M1440 | 14701 | 14702 | 14430 |
| F/R Reinforced Sheet<br>前后加强件 | Servo<br>舵机 | Servo Saver Assembly<br>舵机离合摆臂 | Steering Assembly<br>转向传动组件 |
| 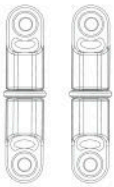 |  | 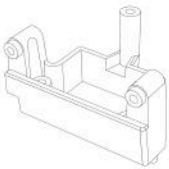 | 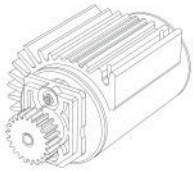 |
| 14431 | 14270 | 14271 | B284K |
| Steering Linkage<br>转向拉杆 (2PCS) | Servo Upper Fix Frame<br>舵机上固定架 | Servo Under Fix Frame<br>舵机下固定架 | Motor Assembly<br>电机组件 |
|  | 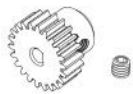 |  | 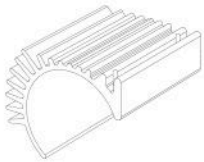 |
| B28454 | 14392 | 16393 | 16395B |
| Brushless Motor<br>无刷电机 | Motor Pinions<br>电机输出齿 | Motor Guard<br>电机固定座 | Motor Heatsink<br>散热片 |

# Spare Parts 配件表

| | | | |
|---|---|---|---|
|  | 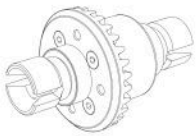 |  |  |
| 16397 | 16420Y | 14400Y | 16401Y |
| Motor Fan<br>风扇 | Metal Gears Diff Assembly<br>全金属齿轮差速箱 | Metal Gears Main Driving Set<br>全金属主传动组件 | Spur Gear Assembly (Metal)<br>传动主齿轮组件(金属) |
|  |  | 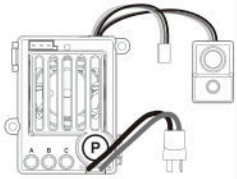 |  |
| 16402Y | 14403 | E45P | R3B |
| Drive Gear (Metal)<br>前锥齿(金属) | Centre Drive Shaft<br>主轴 | Brushless ESC<br>无刷电子调速器 | Receiver<br>接收器 |
|  |  | 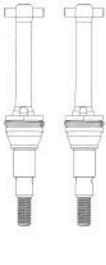 |  |
| T3B | 14500 | 14410 | M20101 |
| Transmitter<br>遥控器 | Oil Filled Shock<br>油压避震 | Metal F/R CVD Shafts (2 Sets)<br>轮胎转动组件 | Wheel Hex Pins<br>六角套铁轴 (8PCS) |

# Spare Parts 配件表

| | | | |
|---|---|---|---|
| 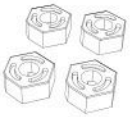 |  |  |  |
| 16440 | 1415A2 | 1415B2 | 1415C |
| Wheel Hex<br>六角套 | Tires ( Rubber )<br>橡胶轮胎 (2PCS) | Tires ( TPR )<br>TPR轮胎 (2PCS) | Tires (Drift)<br>漂移轮胎 (2PCS) |
|  |  |  | 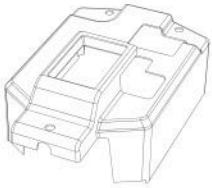 |
| M40 | B2S20 | P2050 | 1430Z |
| M4 Wheel Lock Nut<br>M4螺母 (8PCS) | Battery<br>电池 | USB Charging Cable<br>USB充电线 | Dust proof cover<br>防尘罩 |
|  |  |  |  |
| G3 | 1413Q | BD30 | M0522S |
| Gryo<br>陀螺仪 | Drive Shaft Bracket<br>主轴支撑架 | Battery Base<br>电池固定带 | Steering Shaft<br>转向轴 (2PCS) |

# Spare Parts 配件表

| | | | |
|---|---|---|---|
| 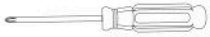 | 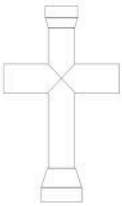 | 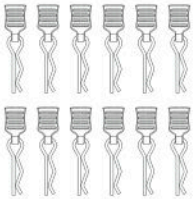 |  |
| P810 | P812 | M001 | Q1601 |
| Screwdriver<br>螺丝刀 | Hexagonal Wrench<br>六角扳手 | Body Clips<br>车壳扣 (12PCS) | Steering Pivot Balls<br>球头 (8PCS) |
|  | 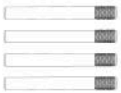 |  |  |
| Q1602 | M2523 | HTHM3029 | M4018 |
| Steering Pivot Balls<br>球头 (8PCS) | Rear Fixing Pin<br>后固定座插销 (4PCS) | Screws<br>半圆头半牙螺丝<br>(12PCS) | Screws<br>不锈钢紧定螺丝<br>(12PCS) |
| 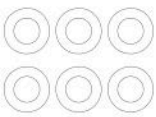 |  | | |
| Q715 | PH03 | | |
| Rubber washers<br>橡胶圈<br>(6PCS) | Screwdriver Sets<br>螺丝刀套装 | | |

## Screws 螺丝

| | | |
|---|---|---|
| HKM2580G | Ø2.5x8mm | 12PCS |
| HKB2012 | Ø2x12mm | 12PCS |
| HTB2380 | Ø2.3x8mm | 12PCS |
| HTB2680 | Ø2.6x8mm | 12PCS |
| HTB2610 | Ø2.6x10mm | 12PCS |
| HTB2615 | Ø2.6x15mm | 12PCS |
| HKB2312 | Ø2.3x12mm | 12PCS |
| HKB2690 | Ø2.6x9mm | 12PCS |
| HKB26125 | Ø2.6x12.5mm | 12PCS |
| HKB2615 | Ø2.6x15mm | 12PCS |
| HTM4012 | Ø4x12mm | 12PCS |

## Others 其他

| | | |
|---|---|---|
| R1810 | Bearing 轴承 | 8PCS |
| R168Z | Bearing 轴承 | 8PCS |



**MADE IN CHINA**

Instructions must be retained since it contains important information.