No.16212/16218/16213

14+

HYPER GO

1:16 RC HIGH SPEED CAR

USER MANUAL

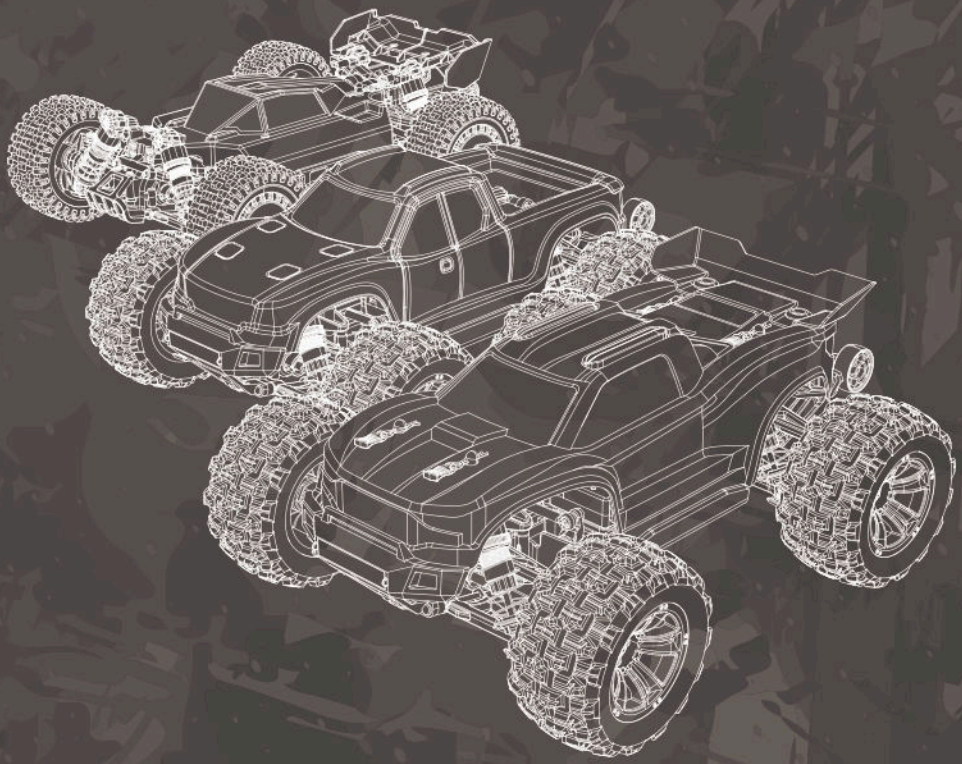

4WD

REMOTE CONTROL

The instruction sheet for this product is just for your reference. We reserve the right to make changes or adjustments on the product without prior notification. Please refer to the official information.

Warning:

Choking hazard! This product contains small parts. NOT suitable for children under 3 years. Contains electrical components and should be kept dry at all times. Regularly check the battery charger wires, plugs and shell and other components for damage. DO NOT use if any part is damaged.

Warnings & Cautions

1. Detachable small parts should be stored safely and out of reach of children.
2. If interference is experienced, turn the model off and try it again in a different area.
3. Transmitter will not function correctly if the batteries are low. Please replace the batteries.
4. Please discard old/used batteries in a safe manner. Consider your environment!
5. Please store the remote control model in cool, dry place.
6. DO NOT expose to fire or high temperatures, do not store in moist place.
7. Once the battery get wet, wipe immediately with a soft dry cloth.
   If the battery any deformation, please stop using.
8. If you don't use the model for a long time, please raise the chassis to let the wheels hang in the air.

Precautions for Battery Use

1. Transmitter uses 4x1.5V "AA" batteries.
2. Please pay attention to correct polarity when replacing batteries.
3. Rechargeable batteries should be charged under adult supervision.
4. Do not mix old and new batteries. Do not mix alkaline, standard (carbon-zinc), or rechargeable batteries.
5. After the battery is exhausted, the model should be removed.
6. Exhaust battery should be safety dispose!
7. DO NOT short circuit any terminals.
8. DO NOT attempt to recharge non rechargeable batteries.
9. Remove batteries from the model when charging.
10. DO NOT put batteries into a fire or into water.
11. The rated input voltage battery charger MUST be suitable for your mains power voltage.
12. During charging it is quite normal for the charger and batteries to heat up.
13. Do not swallow battery!
14. Store only in cool, dry and dark places and should be keep out of the children!
15. When the battery leaks the liquid and let it into you eyes, please right away rinse them and consult an ophthalmologist.

Safety Precautions

- It is a radio control model, not a toy!
- In order to enjoy running the car, you need to finish assembly before operation. Do routine maintenance work after operation. Replacement parts and option parts are available separately.
- Improper usage with Alkaline cells or rechargeable batteries may damage the electronics for the car or the radio.

In order to operate the car safely. Be sure that you have observed the following points:

⚠ Please follow the points as below in order to prevent accident from happening to the car and people.



●Be sure to read thoroughly the manual before you begin. Fresh user should seek advice from people having rich experience in order to assemble the model correctly.



●Cutters, nippers and screwdrivers need careful handling.



●As the product contains small and sharp parts, assemble and store this product only in places out of the reach of children.

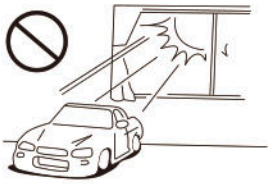

●Do not expose this model to high temperature, humidity or direct sunlight.

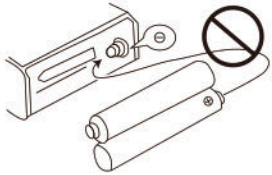

●Never reverse connection/ disassemble the battery. This may lead to damage and leakage.

●When the model is not in use, always turn off the receiver and transmitter. Further more, disconnect the batteries and remove them from the model and the transmitter. This may be dangerous such as overheat and leakage.

Operating Your Model Safely

⚠ Do NOT operate the model in the following places and situations. (Non-observance may lead to accident!)

●Operate your model in spacious and safe areas! Do not operate it:

1. On road!
2. In places where children and many people gather.
3. In residential districts and parks!
4. Do not operate the model on public roads, in crowded places and near infant as it may cause accidents.
5. Indoors and in limited space! Non-observance may result in personal injury and property damage!

●The car must stop immediately and check for the reasons when it is operating abnormal. As long as the problem is not cleared, do NOT operate it! This may lead to further trouble and unforeseen accidents!

●Always check the radio batteries! With weak dry batteries, transmission and reception of the radio would fall off. You may lose control of your model in such condition. This may also cause serious accidents!

●Keep in mind that people around you may also operate a radio control model! NEVER share the same frequency with somebody else at the same time! Otherwise, Radio signals will be mixed up and you will lose control to your model. This may lead to accidents.

●Do NOT put fingers or any objects inside rotating and moving parts!

●Right after use, do NOT touch the motor! Danger of burning yourself!

FCC PART 15 B Notice:
CAUTION

Warning: Changes or modifications to this unit not expressly approved by the party responsible for compliance could void the user's authority to operate the equipment.

NOTE: This equipment has been tested and found to comply with the limits for a Class B digital device, pursuant to Part 15 of the FCC Rules. These limits are designed to provide reasonable protection against harmful interference in a residential installation. This equipment generates, uses and can radiate radio frequency energy and, if not installed and used in accordance with the instructions, may cause harmful interference to radio communications.

However, there is no guarantee that interference will not occur in a particular installation. If this equipment does cause harmful interference to radio or television reception, which can be determined by turning the equipment off and on, the user is encouraged to try to correct the interference by one or more of the following measures:

- Reorient or relocate the receiving antenna.
- Increase the separation between the equipment and receiver.
- Connect the equipment into an outlet on a circuit different from that to which the receiver is connected.
- Consult the dealer or an experienced radio/TV technician for help.

This device complies with Part 15 of the FCC Rules. Operation is subject to the following two conditions:

(1) this device may not cause harmful interference, and

(2) this device must accept any interference received, including interference that may cause undesired operation.

微功率短距离设备相关规定要求如下：

（一）符合“微功率短距离无线电发射设备目录和技术要求”的具体条款和使用场景，采用的天线类型和性能，控制、调整及开关等使用方法；

（二）不得擅自改变使用场景或使用条件、扩大发射频率范围、加大发射功率（包括额外加装射频功率放大器），不得擅自更改发射天线；

（三）不得对其他合法的无线电台（站）产生有害干扰，也不得提出免受有害干扰保护；

（四）应当承受辐射射频能量的工业、科学及医疗（ISM）应用设备的干扰或其他合法的无线电台（站）干扰；

（五）如对其他合法的无线电台（站）产生有害干扰时，应立即停止使用，并采取措施消除干扰后方可继续使用；

（六）在航空器内和依据法律法规、国家有关规定、标准划设的射电天文台、气象雷达站、卫星地球站（含测控、测距、接收、导航站）等军民用无线电台（站）、机场等的电磁环境保护区域内使用微功率设备，应当遵守电磁环境保护及相关行业主管部门的规定；

（七）禁止在以机场跑道中心点为圆心、半径5000米的区域内使用各类模型遥控器；

（八）微功率设备使用时温度和电压的环境条件；

（九）使用微功率短距离无线电发射设备应当符合国家无线电管理有关规定。

电池使用注意事项

1. 遥控器使用4节1.5V“AA”号电池；
2. 安装或更换电池时请注意极性；
3. 充电电池只能在成人监护下充电；
4. 不可混用新旧或不同型号的电池；
5. 电池电量用尽后，应从模型内取出；
6. 将耗尽电量的电池交给专门的环保部门处理!
7. 接线端不应短路；
8. 非充电电池不可充电；
9. 充电电池充电前应从模型中取出；
10. 请不要将坏的电池、电池组分解或扔到火中、水里，以免发生意外；
11. 充电器的额定输入电压必须与当地的家用电压相符；
12. 在充电过程中，充电器和电池出现微温，属于正常现象；
13. 不可吞咽电池!
14. 将电池放在凉爽、干燥避光及小孩接触不到的地方!
15. 电池漏液而且滴到眼睛里，请马上用大量的清水清洗，然后到附近的医院就医。

安全注意事项

1. 干电池或充电电池的不适当使用，会损害车或无线电的系统。
2. 模型只能使用推荐的充电器，充电器不是模型，可用液体清洗的模型清洁前应与充电器断开，定期检查充电器的电线、插头、外壳和其他部件是否损坏，发现损坏时应停止使用，直至修复完好。
3. 说明书含有重要信息，请予以保留。
4. 遥控车供电电池（DC6V）输入，支持2S锂电池7.4V供电。

Power Switch 开关

1. Turn on the power switch of the transmitter, the signal indicator light of transmitter flashes.
2. Press the power button of high speed car, which is on the side of the ESC; the indicator light of high speed car flashes.
3. When the indicator light stays on, the high speed car can be operated to play.

1. 打开遥控器电源开关，遥控器信号指示灯闪烁。
2. 按下高速车电调侧面的电源开关按钮，高速车指示灯闪烁。
3. 当指示灯变为常亮后，便可操控高速车。

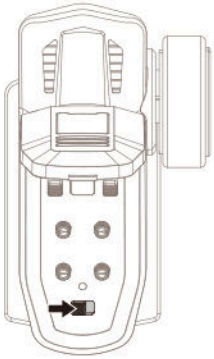

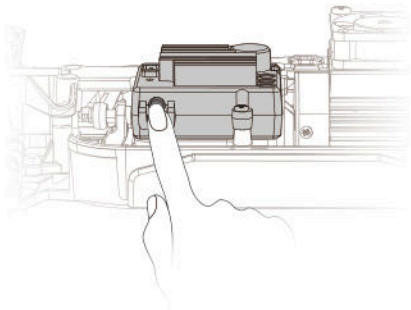

⚠
- When turn on the transmitter, please DO NOT touch the throttle and steering. After turn on the transmitter's power, please operate after the indicator light of transmitter staying on.
- Please comply the principle of "turn on the transmitter firstly, then turn on the high speed car".
- In the frequency matching, please make sure there is only one pair of transmitter and high speed car in matching at the same time, otherwise the frequency will match wrongly.

- 当准备开启遥控器时，请勿触动油门和转向。打开遥控器开关，遥控器指示灯点亮后才能进行操作。
- 开机时应遵循"先开启遥控器，再开启高速车"的原则。
- 在同一时刻，请确保对码的遥控器和高速车只有一对，否则会对错遥控器。

R30 Receiver 接收器

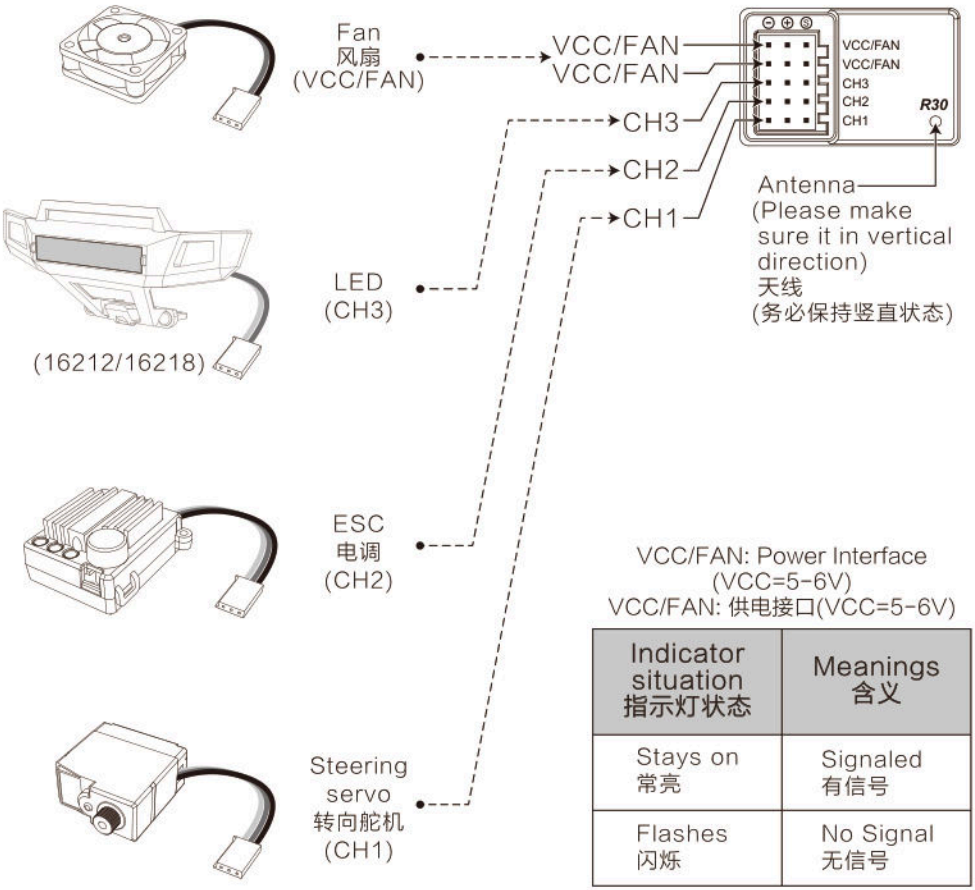

VCC/FAN: Power Interface
(VCC=5-6V)
VCC/FAN: 供电接口(VCC=5-6V)

Indicator situation 指示灯状态	Meanings 含义
Stays on 常亮	Signaled 有信号
Flashes 闪烁	No Signal 无信号

⚠ Warning: Please make sure the connection is correct.
警告：请注意连接是否正确。

E45A2 Brushless ESC 电调

⚠ Please Do Not forcible/reversely insert all sockets.
所有插座请勿强行反插。

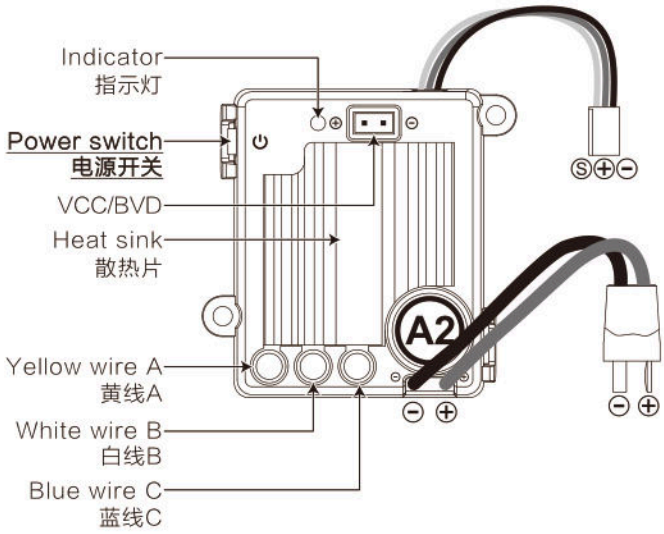

Indicator light situation 指示灯状态	Meanings 含义
Stays on 常亮	Signaled 有信号
Flash quickly 快闪	a. No signal 无信号 b. Pull the trigger 扣动扳机
Flash slowly 慢闪	Low voltage 低电压
Flash twice 闪两下	Over heat protection 过热保护
Off 熄灭	Stuck protection 堵转保护

T3D Transmitter 遥控器

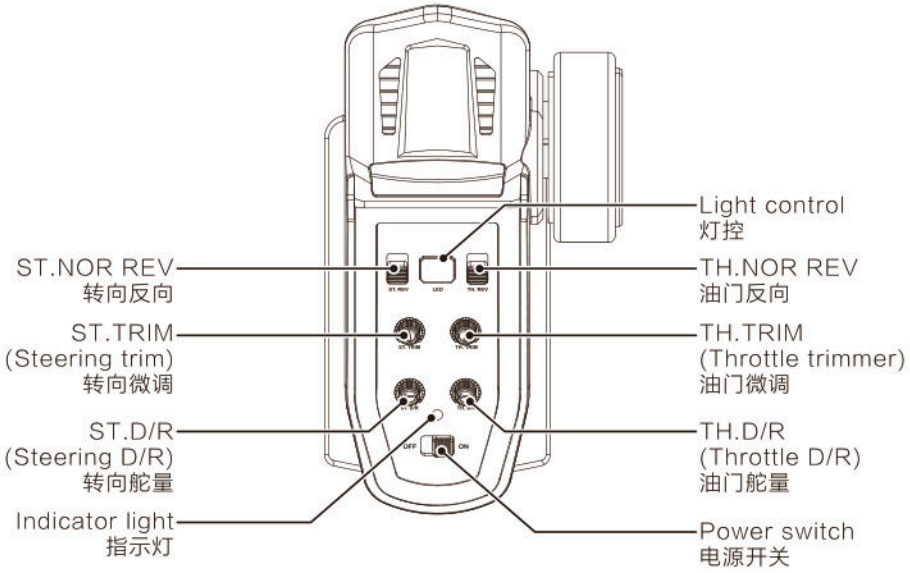

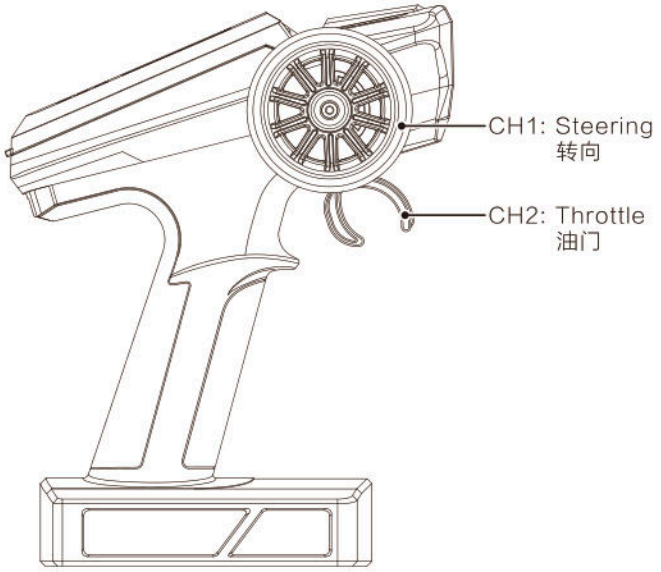

①ST.TRIM (Steering servo trimmer 转向舵机微调)

If the car cannot go straightly during driving, it can be adjusted through the ST.TRIM.
车辆行驶过程中如无法直线行驶，可通过此微调进行调整。

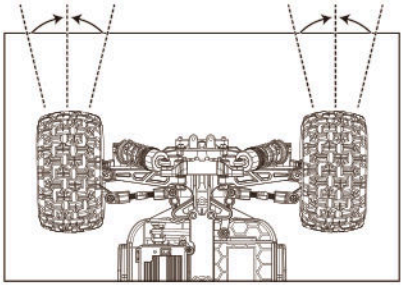

②TH.TRIM (Throttle trimmer 油门中位微调)

If the car can't be stop when the TH in the middle place, you can adjust the button to stop the car.
如TH（油门）在中位状态下，车辆无法正常停止，可通过此微调进行调节，使车辆停止。

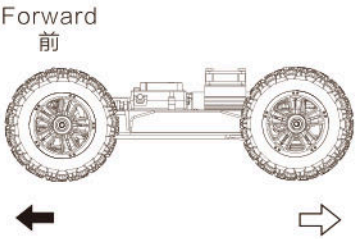

③Indicator light 指示灯

Stays on 常亮	Working well 正常
Flash quickly 快闪	Frequency mating 对码状态
Flash slowly 慢闪	Low battery of transmitter 遥控器电池电量低

④Fn(CH3 Light control) 灯控

Short Press the "▢" button to turn on/off the light of high speed car.
短按"▢"按键时，控制高速车灯光开启或关闭。

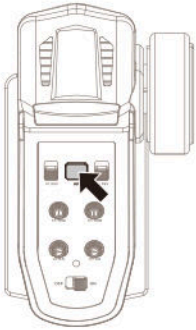

⑤CH1：ST (Steering 转向)

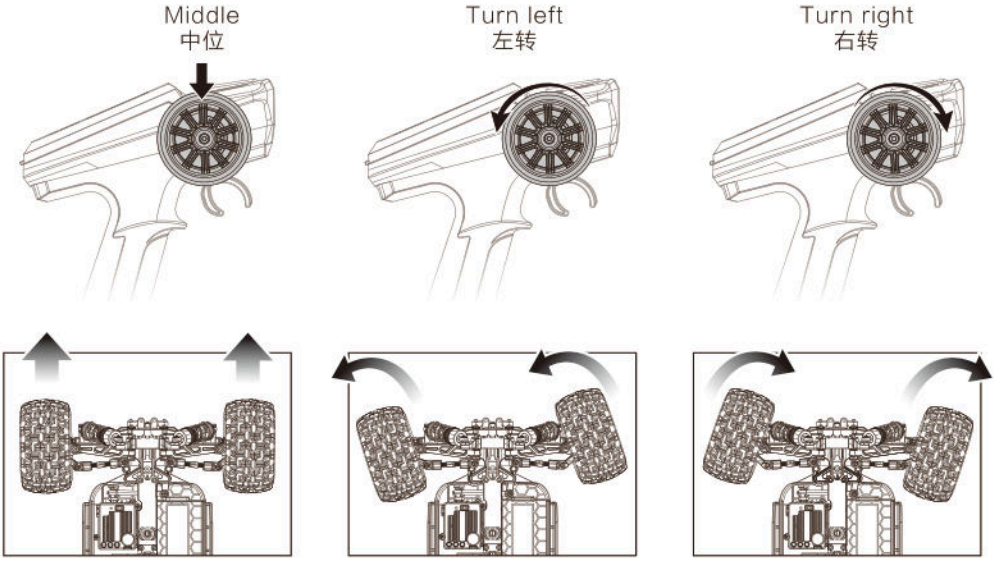

⑥CH2：TH (Throttle 油门)

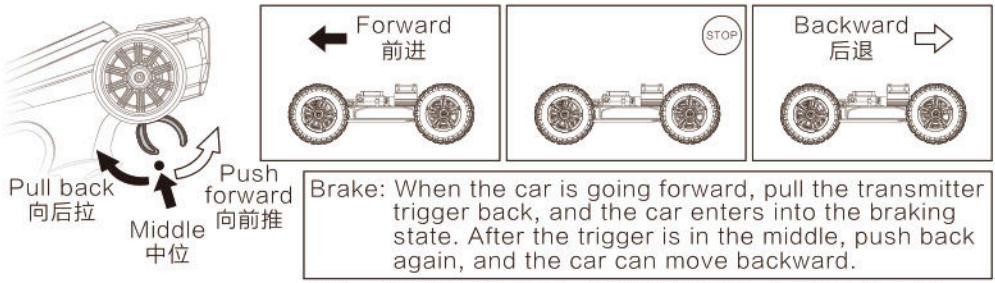

Brake: When the car is going forward, pull the transmitter trigger back, and the car enters into the braking state. After the trigger is in the middle, push back again, and the car can move backward.

刹车：当车辆向前行驶时，遥控器推动后退，车辆进入刹车状态，需油门归中后，再次推动后退，车辆才能后退。

*When the car is in reverse situation, it does not the brake function.
车辆处于后退状态下，无刹车功能。

Install the Transmitter's Battery
遥控器安装电池

Open the transmitter's battery cover, insert 4 AA batteries according to the indicated positive and negative direction, close the battery cover.
将遥控器电池盖打开，按照遥控器指示的正负极，正确装入4节AA电池，再重新盖上电池盖。

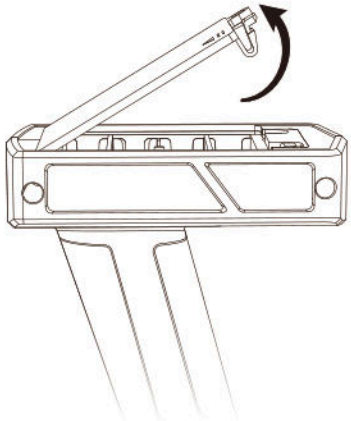

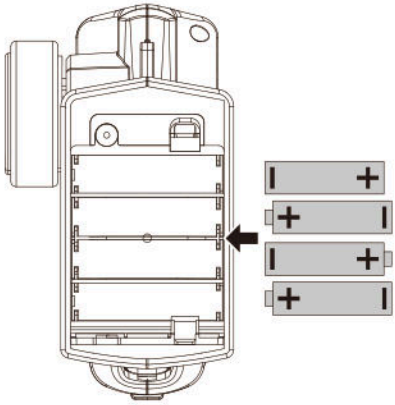

16212/16218 Install the Head Wheels
抬头轮安装

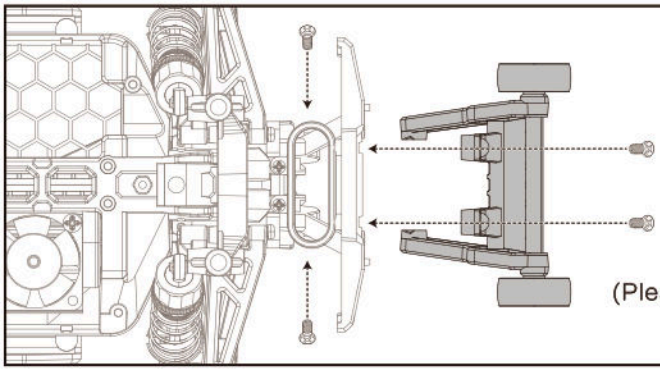

Fix the head wheels into the rear of the car via 4 screws.
将抬头轮架用4颗螺丝固定在车身尾部。

(Please disassemble 2 screws of car head firstly)
(车头2颗螺丝需先拆下)

16213 Install the Head Wheels 抬头轮安装

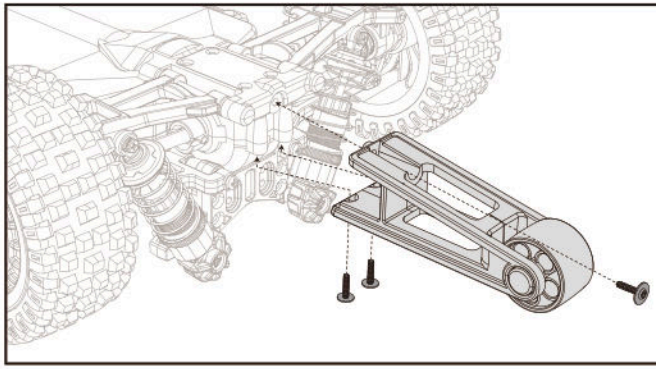

Fix the head wheels into the rear of the car via 3 screws.
将抬头轮架用3颗螺丝固定在车身尾部。

16213 Install the Tail 安装尾翼

Install the tail to the body, lock with 2 screws.
将尾翼安装到车身，用2颗螺丝锁紧尾翼。

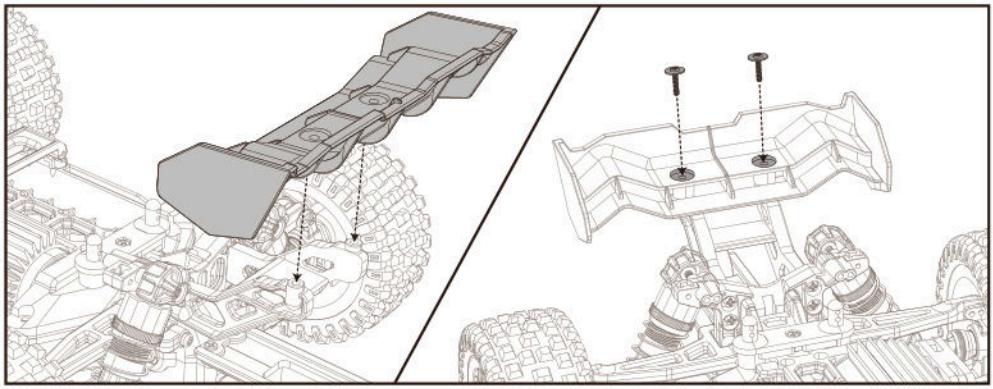

Install the Battery 安装电池

①Unlock the fixing tape;
将固定带解开；
②Insert the battery into the battery box, make sure it’s in place;
将电池放入电池座，确保安装到位；
③Tighten the battery with the fixing tape;
将固定带绑紧电池；
④Connect the receiver plug to the battery.
将接收器插头连接电池。

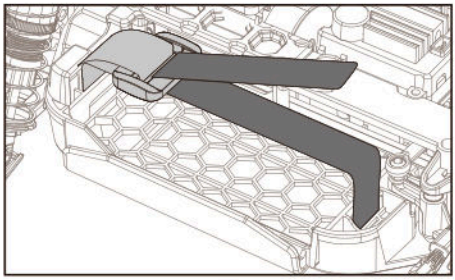

❶

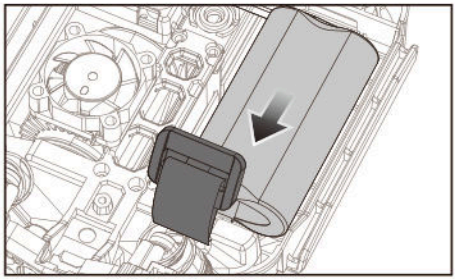

❷

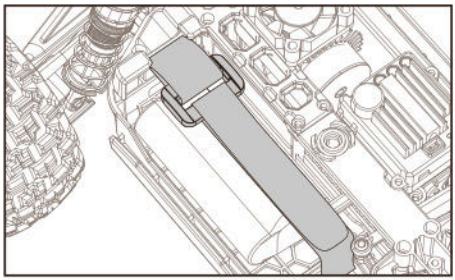

❸

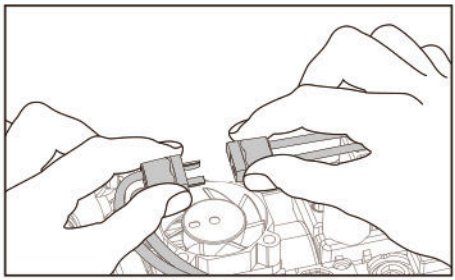

❹

Charge 充电

If charging with a 5V 2A USB adapter.
- When charging, the indicator light of charger is green and flashes;
- When the battery is fully charged, the green indicator light of the charger stays on.

*The above charging time data is based on the test result of 5V 2A adapter. Using different specifications of adapters or power supply equipment will affect the actual charging time. It is recommended to use a 5V 2A adapter for charging.

使用5V 2A USB适配器进行充电。
- 电池充电时，充电器绿色指示灯闪烁；
- 电池满电时，充电器绿色指示灯常亮。

*以上充电时长数据为配置5V 2A适配器的测试结果，使用不同规格的适配器和供电设备会影响实际充电时间。建议使用5V 2A适配器进行充电。

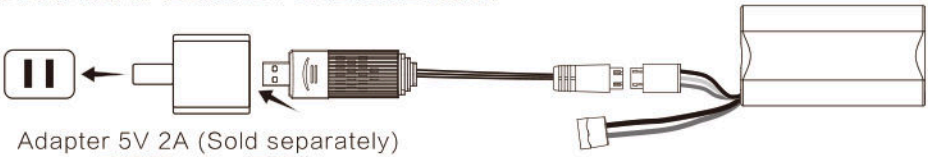

Adapter 5V 2A (Sold separately)
适配器5V 2A (需另购)

16212 Install Car Shell 安装车壳

1. Aline the 4 holes of the car shell with holders, then install it.
将车壳4个孔位对准车壳支架装入。

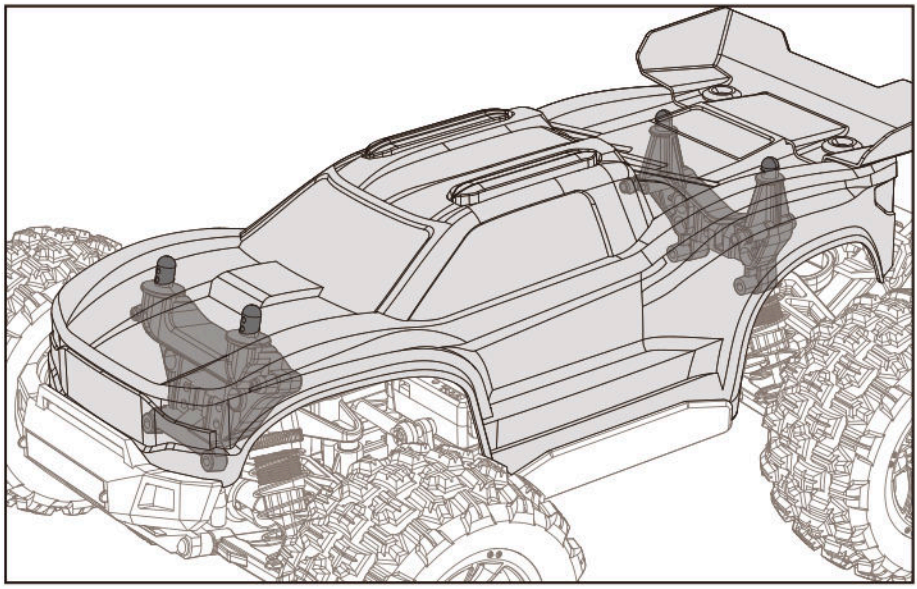

2. Insert the 4 clips into the holes to lock the car body.
将4个车壳扣插入锁紧车壳。

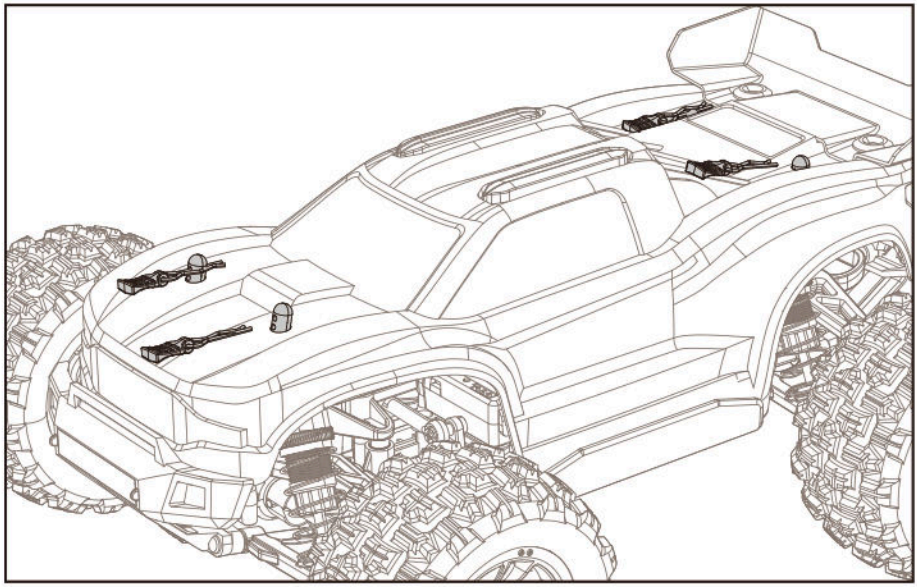

16213 Install Car Shell 安装车壳

1. Aline the 3 holes of the car shell with holders, then install it.
将车壳3个孔位对准车壳支架装入。

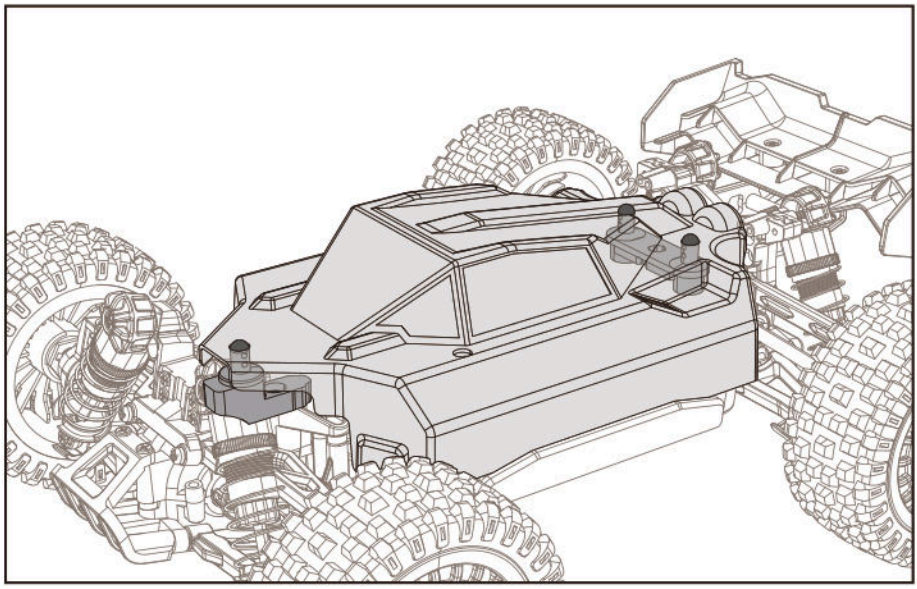

2. Insert the 3 clips into the holes to lock the car body.
将3个车壳扣插入锁紧车壳。

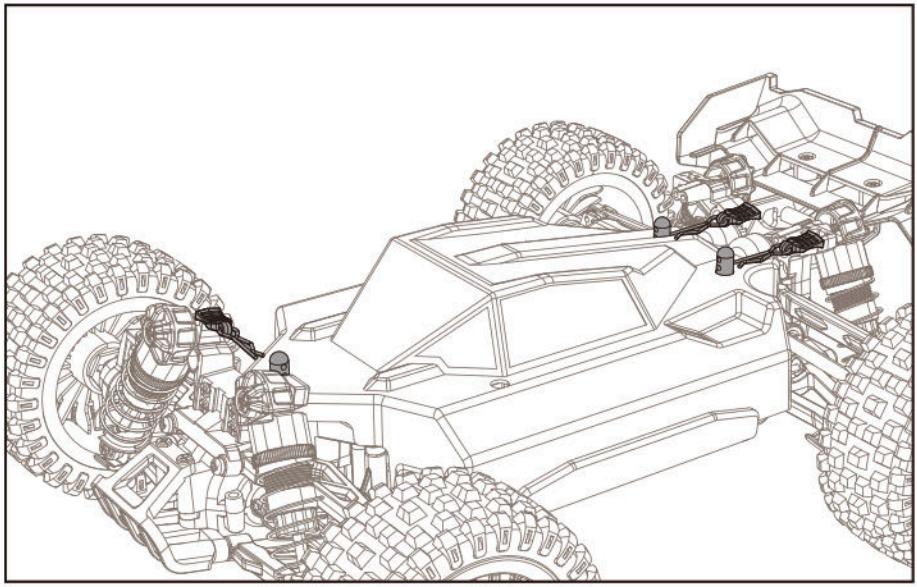

16218 Install Car Shell 安装车壳

1. Turn the body lock knob (as pic ①), then flip up to open the lock (as pic ②).
转动车壳锁扣旋钮①，向上翻打开锁扣②。

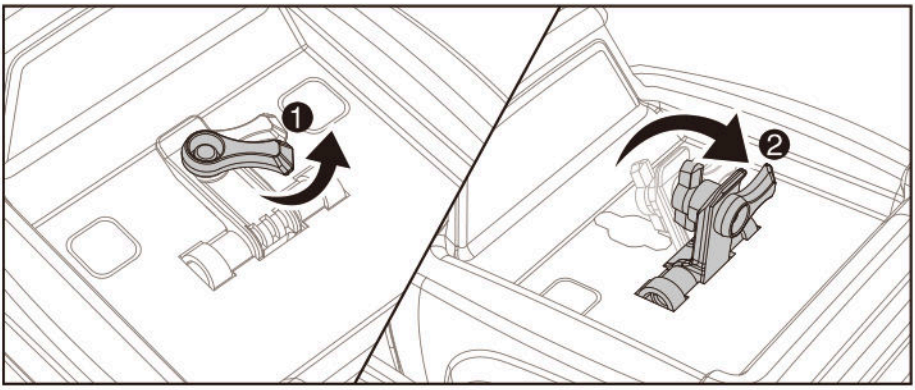

2. Insert the car shell into the front shock tower (as pic ③), then press the locking hook vertically down to the rear shock tower (as pic ④).
将车壳插入前减震塔③，锁扣勾垂直下压到后减震塔④。

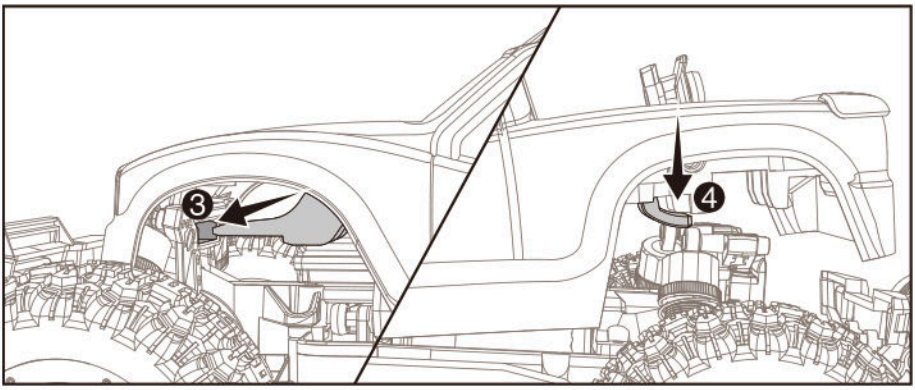

3. Flip down the closing lock (as pic ⑤), then turn the knob to lock the car body (as pic ⑥). 向下翻关闭锁扣⑤，转动旋钮锁紧车壳⑥。

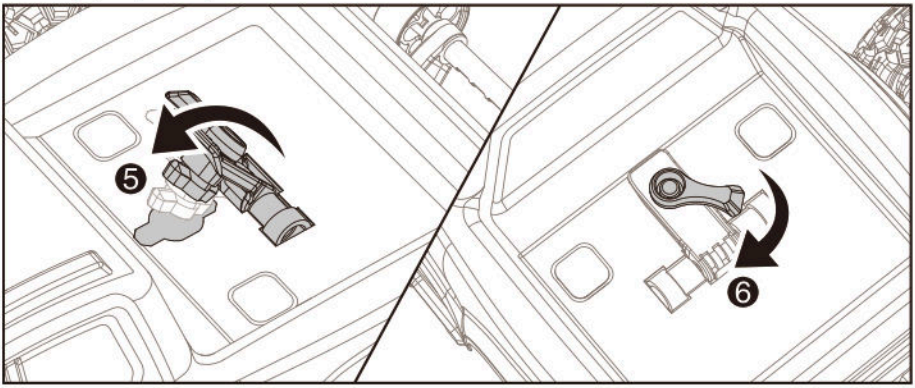

16212 Body 车壳组件

Screw 螺丝:

M2054 Ø2x5mm 6PCS

Screws 螺丝----------

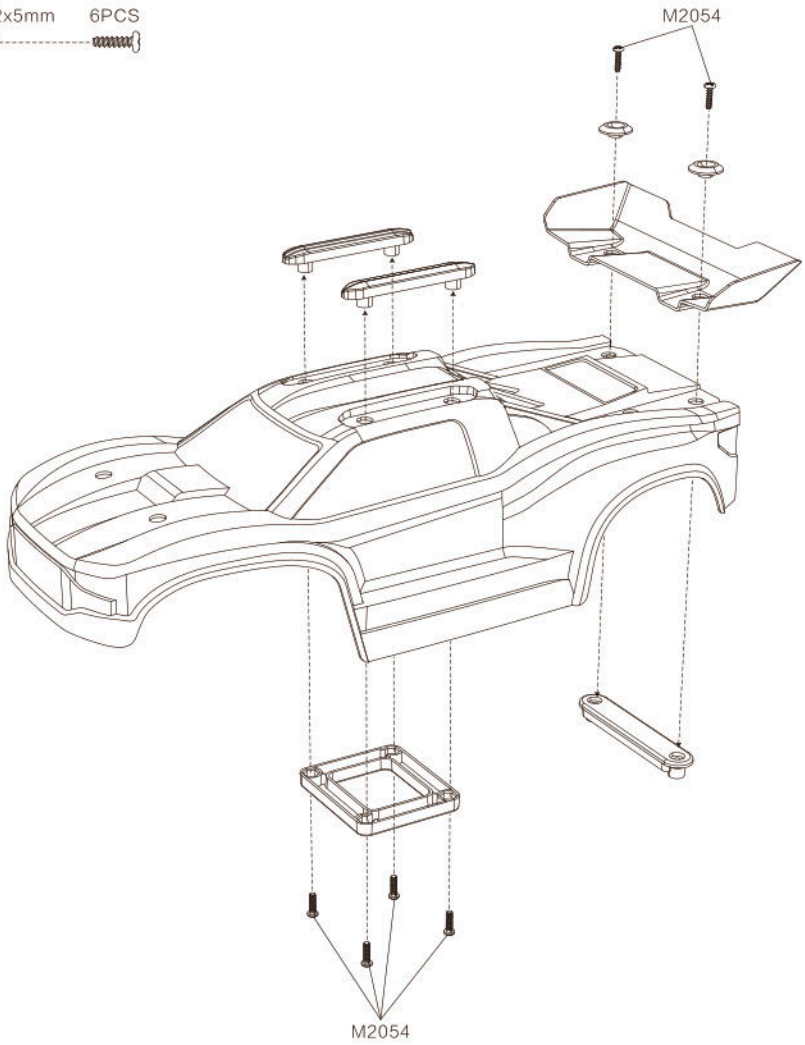

P1601K4

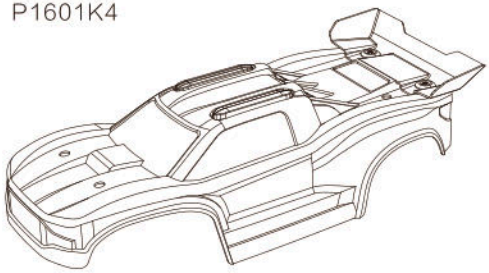

16218 Body 车壳组件

Screw 螺丝:

M2054 Ø2x5mm 14PCS
Screws 螺丝----------

M26414 Ø2.6x4mm 2PCS
Screws 螺丝----------

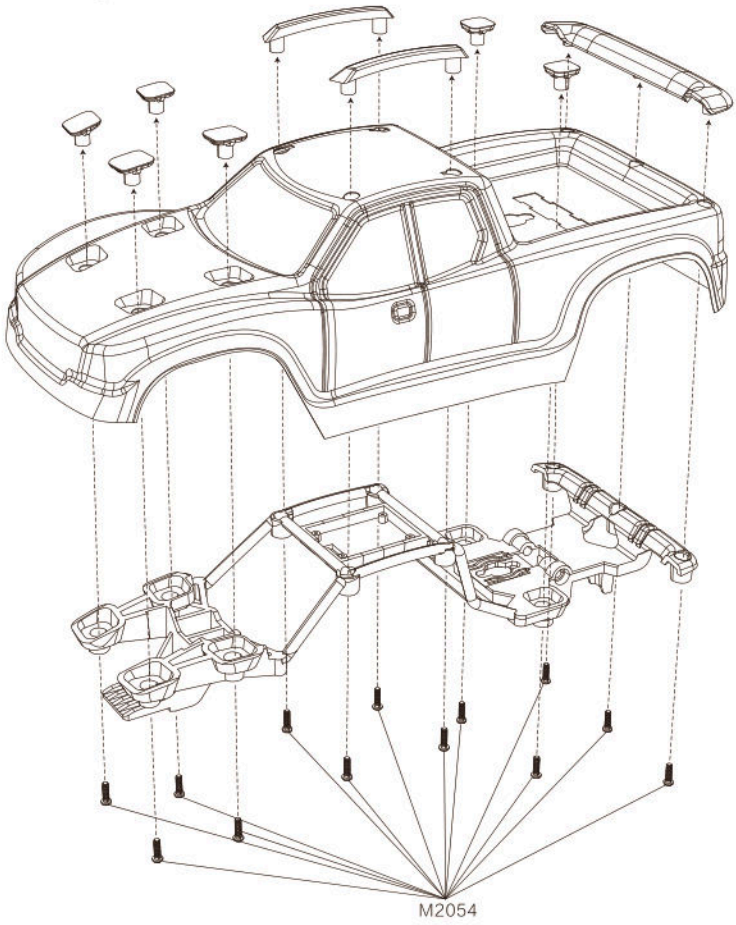

1601C

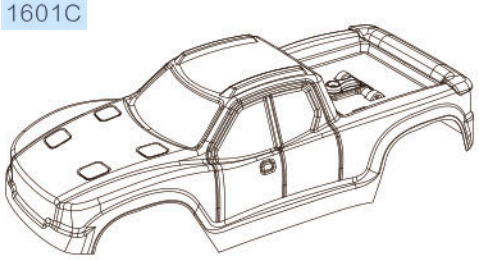

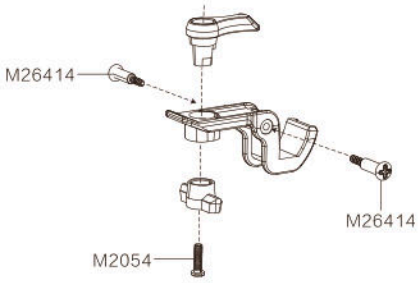

16212/16218 Front Bumper Assembly (With LED)
前防撞组件(包含LED)

Screw 螺丝:

M2684 Ø2.6x8mm 2PCS

Screws 螺丝

M2354 Ø2.3x5mm 1PCS

Screws 螺丝

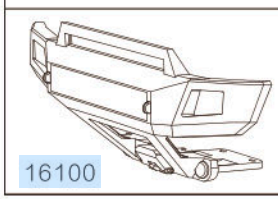

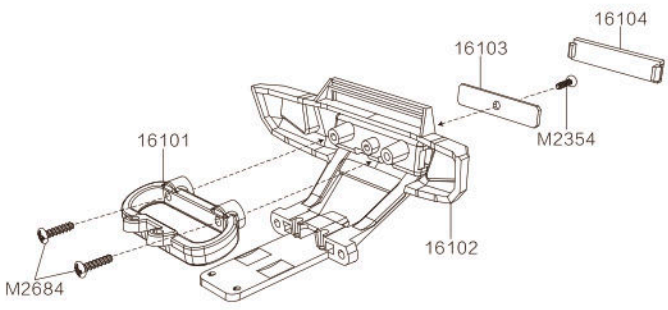

Front Swing Set 前摆臂组件

Screw 螺丝:

M26124 Ø2.6x12.5mm 2PCS

Screws 螺丝

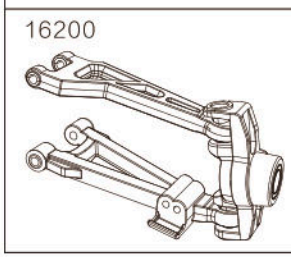

Bearing 轴承:

R168Z 2PCS

Ball bearing
滚珠轴承

Pivot balls 球头:

Q1601 2PCS

Steering pivot balls
球头

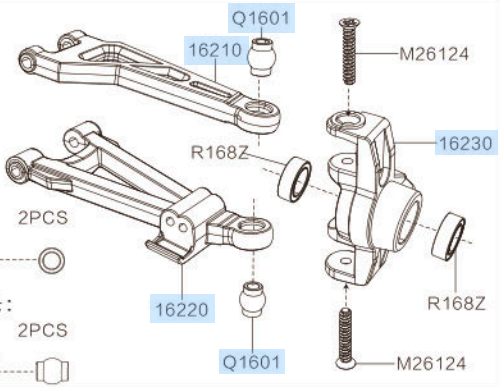

Rear Swing Set 后摆臂组件

Screw 螺丝:

M23124 Ø2.3x12mm 1PCS

Screws 螺丝

Bearing 轴承:

R168Z 2PCS

Ball bearing
滚珠轴承

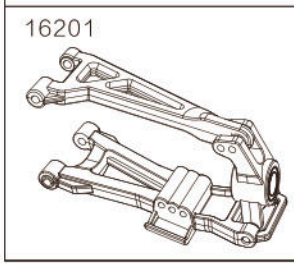

Rear hub pins 单花轴:

M2523 1PCS

Rear hub pins
后固定座插销

Pivot balls 球头:

Q1602 1PCS

Steering pivot balls
球头

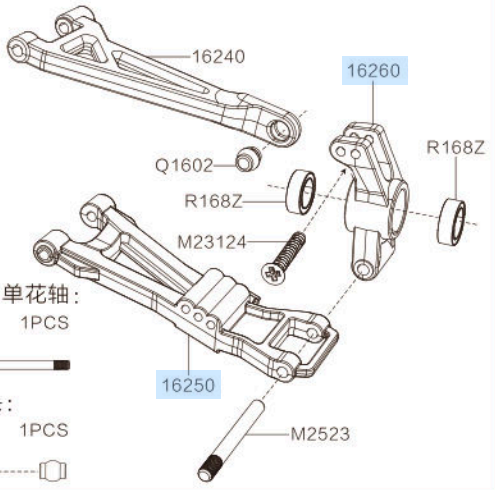

16400Y Metal Gears Main Driving Set 全金属主传动组件

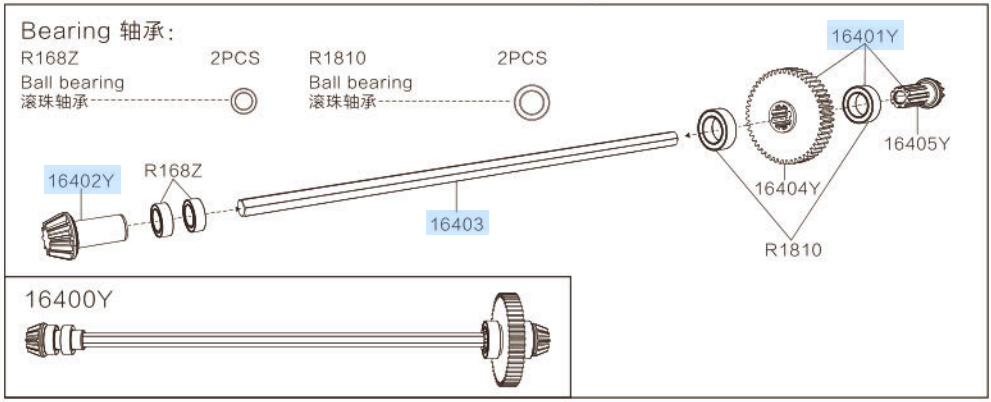

16420Y Metal Gears Diff Assembly 全金属齿轮差速箱

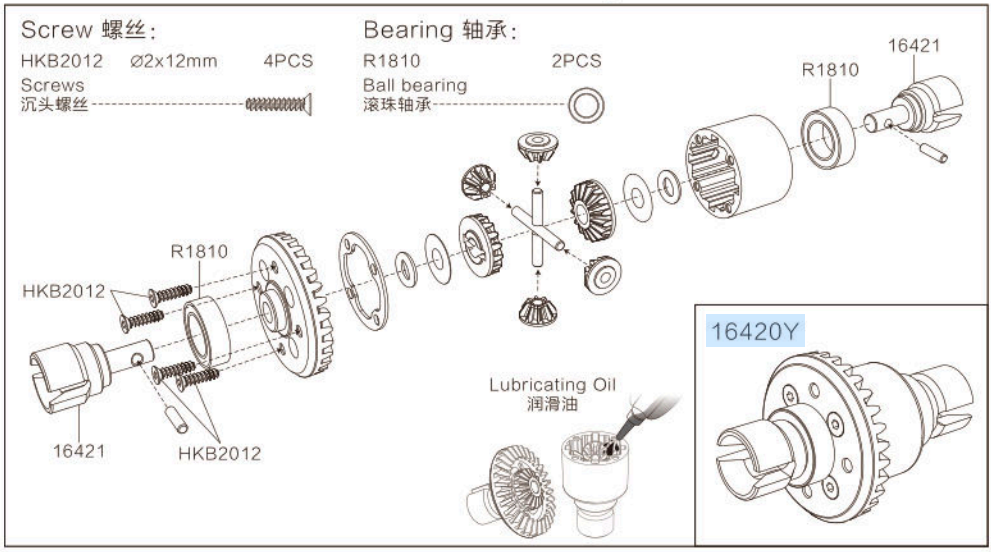

16700 Servo Assembly 舵机组件

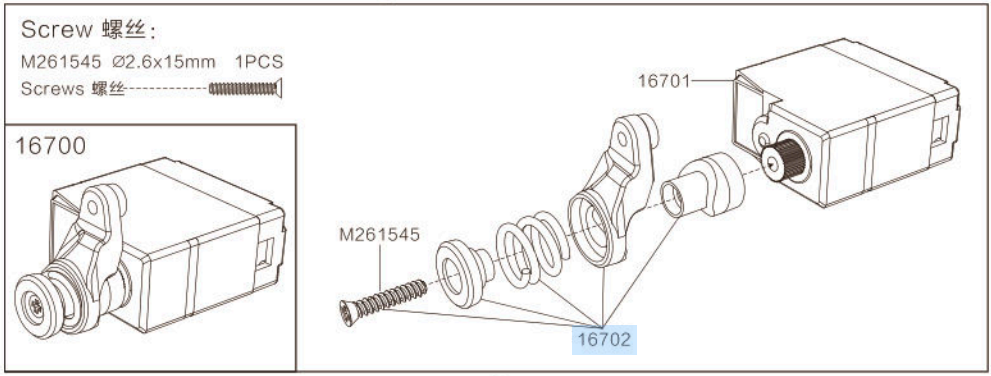

16212/16218 Oil Filled Shock 油压避震

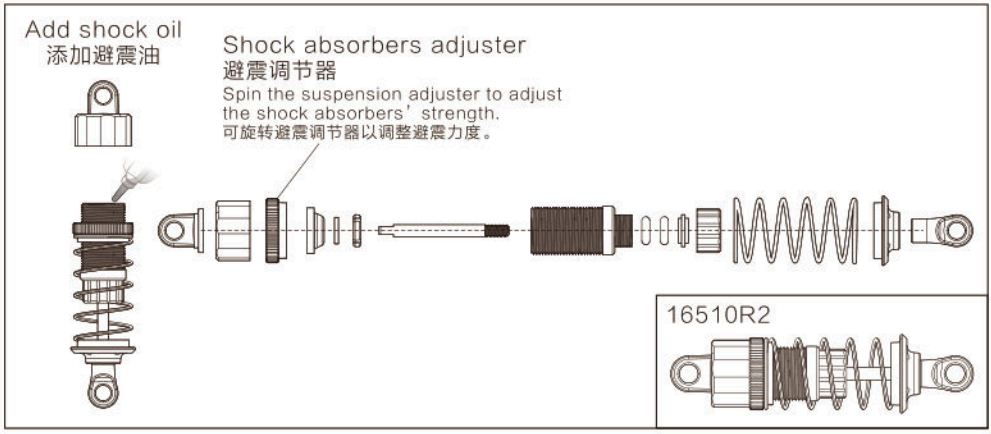

16213 Metal Oil Filled Shocks 金属油压避震

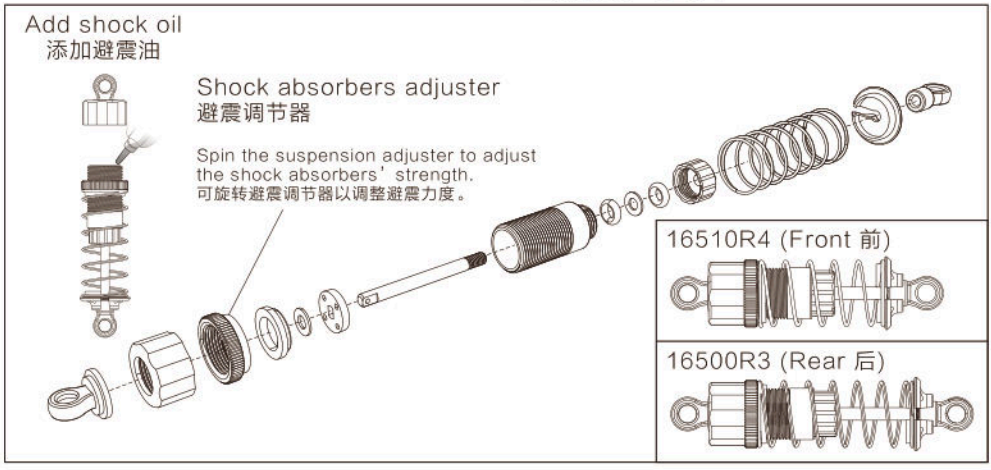

16430P Steering Assembly 转向传动组件

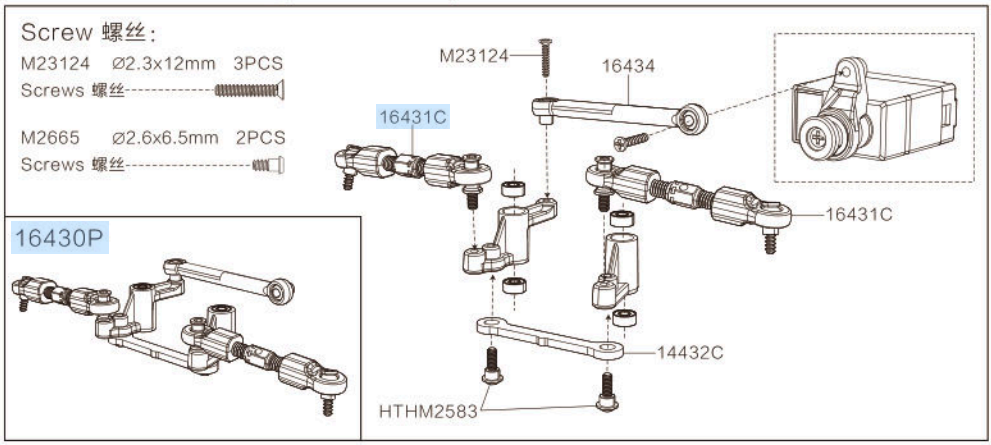

B284B & 16397 Motor Assembly 电机组件

Screw 螺丝:

M3066 Ø3x6mm 2PCS
Screws 螺丝----------

M3156 Ø3x15mm 2PCS
Screws 螺丝---------

M3030 Ø3x3mm 1PCS
Screws 内六角机丝螺丝-------

B284B & 16397

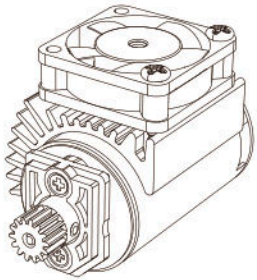

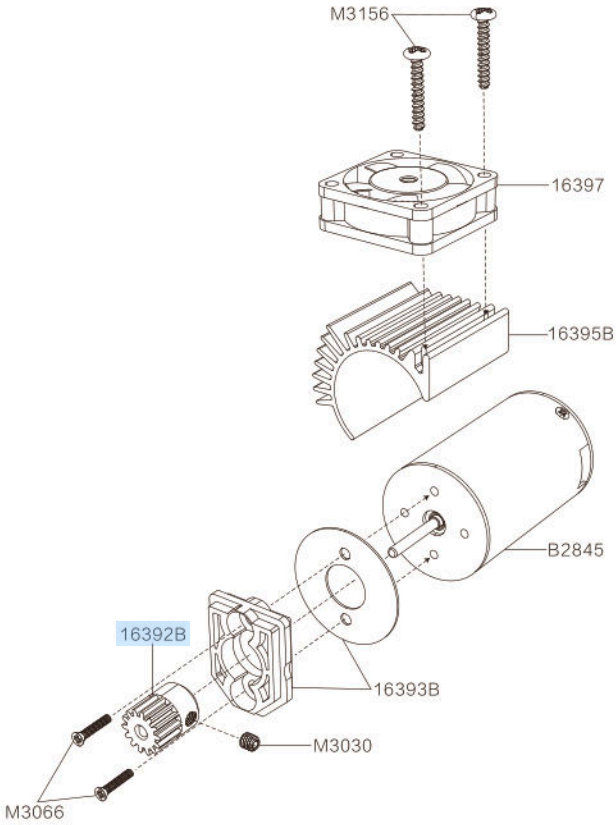

High Speed Car Assemble 高速车总装

Screw 螺丝:

M26104 Ø2.6x10mm 9PCS
Screws 螺丝----------

M23104 Ø2.3x10mm 6PCS
Screws 螺丝----------

M2684 Ø2.6x8mm 4PCS
Screws 螺丝----------

M23114 Ø2.3x11mm 1PCS
Screws 螺丝----------

M26154 Ø2.6x15mm 1PCS
Screws 螺丝----------

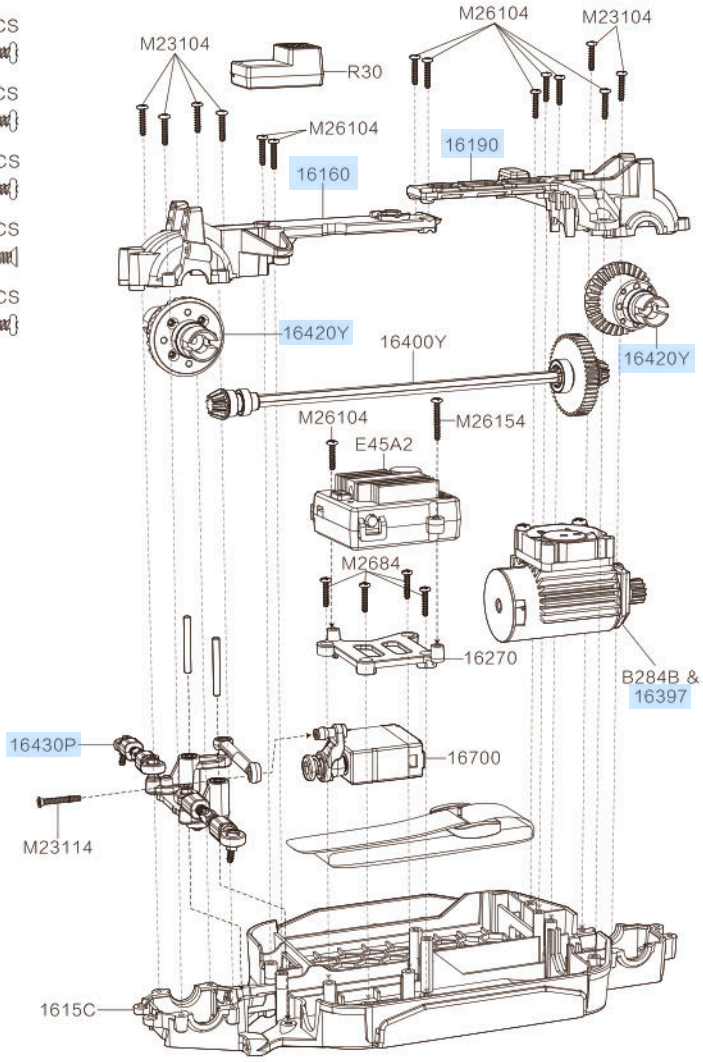

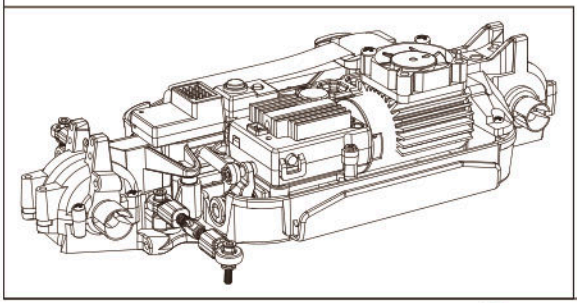

16212/16218 High Speed Car Assemble 高速车总装

Screw 螺丝:

M3294 Ø3x29mm 4PCS
Screws 螺丝

M26104 Ø2.6x10mm 1PCS
Screws 螺丝

M23104 Ø2.3x10mm 4PCS
Screws 螺丝

M2684 Ø2.6x8mm 9PCS
Screws 螺丝

Iron shaft 铁轴:

M25425 4PCS
Lower swing arm fixed shaft
下摆臂固定轴

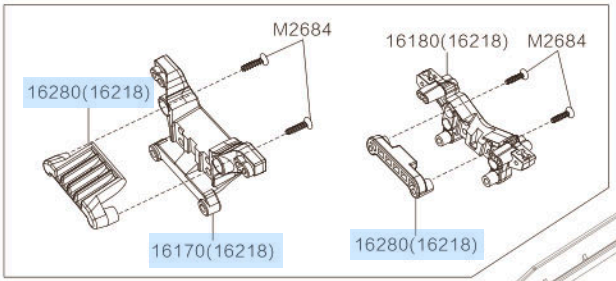

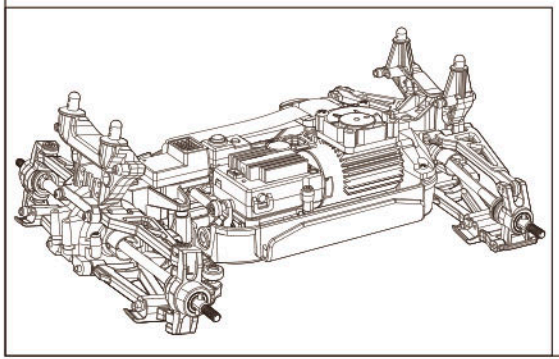

16213 High Speed Car Assemble 高速车总装

Screw 螺丝:

M3294 Ø3x29mm 4PCS
Screws 螺丝--------

M26104 Ø2.6x10mm 5PCS
Screws 螺丝----------

M23104 Ø2.3x10mm 4PCS
Screws 螺丝----------

M2684 Ø2.6x8mm 7PCS
Screws 螺丝----------

Iron shaft 铁轴:

M25425 4PCS
Lower swing arm fixed shaft
下摆臂固定轴----

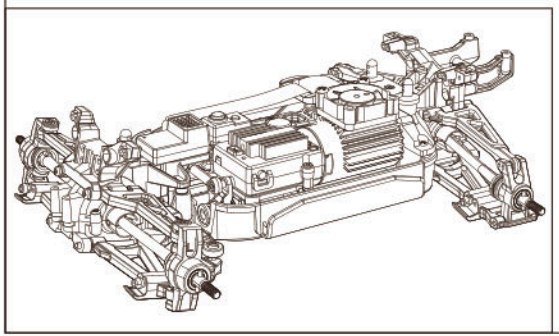

16212/16218 High Speed Car Assemble 高速车总装

Screw 螺丝:

M23124 Ø2.3x12mm 4PCS (8PCS)
Screws 螺丝----------

M2684 Ø2.6x8mm 4PCS
Screws 螺丝----------

M26645 Ø2.6x6mm 6PCS
Screws 螺丝----------

M26154 Ø2.6x15mm 2PCS
Screws 螺丝----------

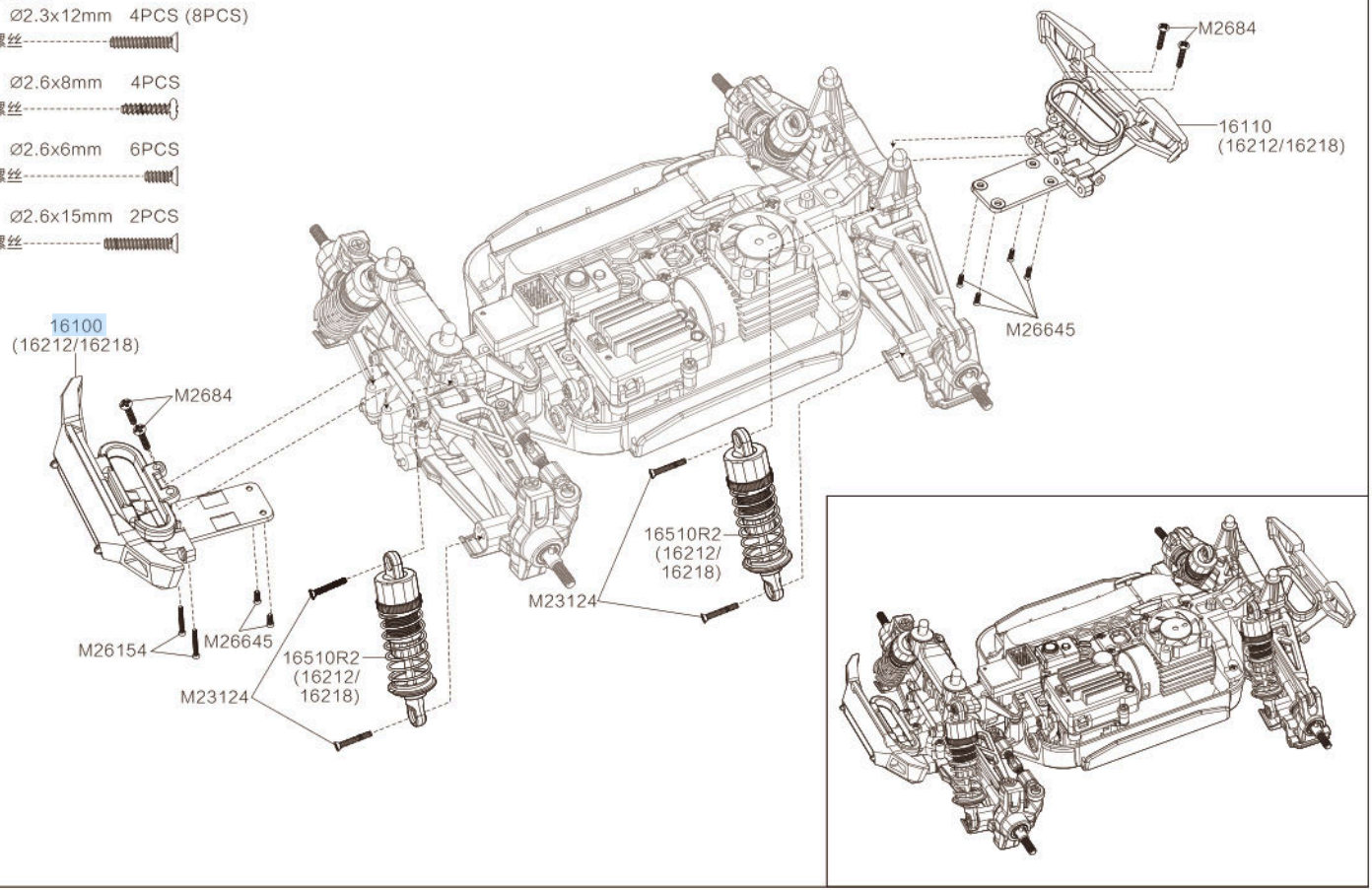

16213 High Speed Car Assemble 高速车总装

Screw 螺丝:

M23124 Ø2.3x12mm 4PCS (8PCS)
Screws 螺丝----------

M2684 Ø2.6x8mm 2PCS
Screws 螺丝----------

M26645 Ø2.6x6mm 6PCS
Screws 螺丝----------

M26154 Ø2.6x15mm 2PCS
Screws 螺丝----------

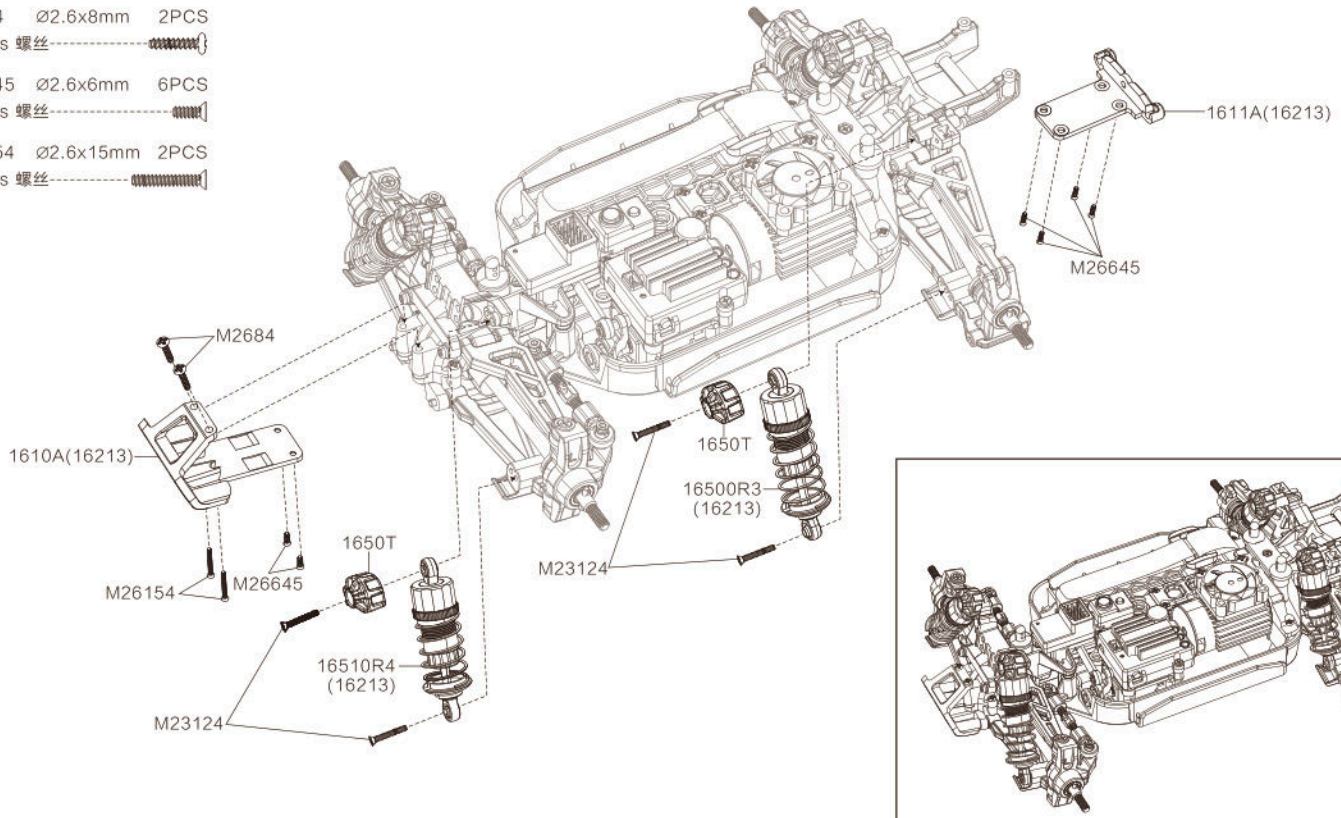

High Speed Car Assemble 高速车总装

Iron shaft 铁轴:

M20101 1PCS (4PCS)

Wheel hex pins
六角套铁轴

16440 1PCS (4PCS)

Wheel hex
六角套

Nut 螺母:

M40 1PCS (4PCS)

M4 Wheel lock nut
M4螺母

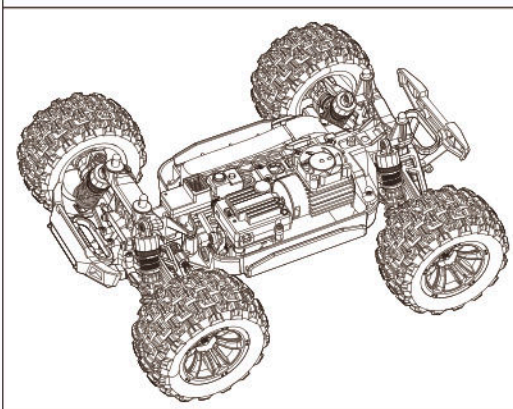

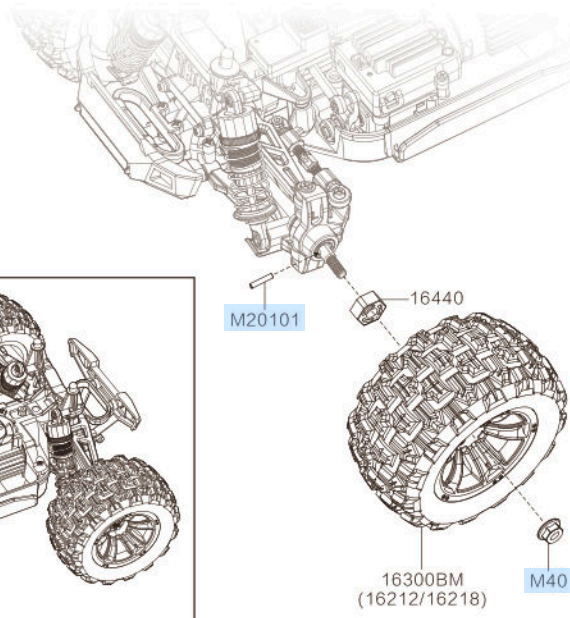

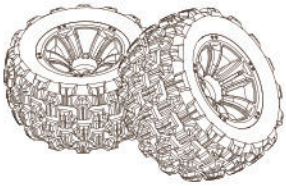

16300BM(16212/16218)



16300C2(16213)

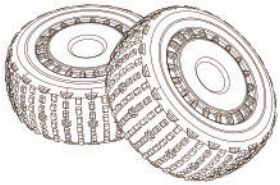

16300M2(16213)

Spare Parts 配件表

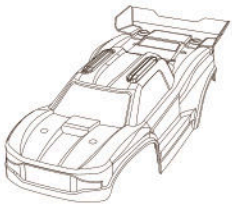	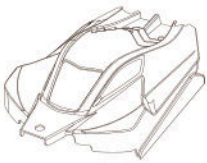	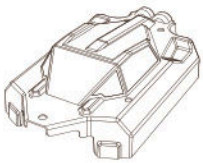	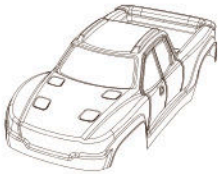
P1601K4(16212)	P1601G2(16213)	P1601G3(16213)	1601C(16218)
Body 车壳组件	Body(Blue) 车壳(蓝色)	Body(Black) 车壳(黑色)	Body 车壳组件
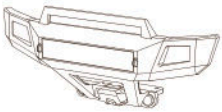	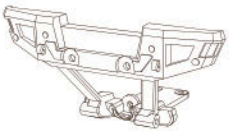		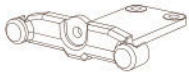
16100	16110	1610A(16213)	1611A(16213)
Front Bumper Assembly 前防撞组件	Rear Bumper Assembly 后防撞组件	Front Bumper Assembly(Metal) 前防撞组件(金属)	Rear Bumper (Metal) 后防撞(金属)
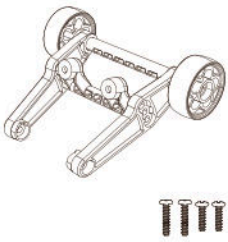	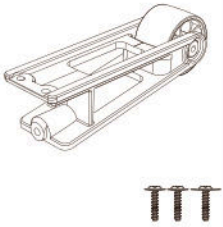	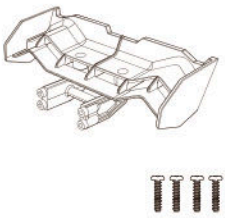	
16120	16120S(16213)	1612B(16213)	1615C
Wheelie Bar Assembly 抬头轮	Wheelie Bar Assembly 抬头轮	Tail 尾翼	Chassis 底盘

Spare Parts 配件表

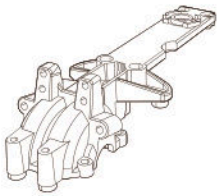	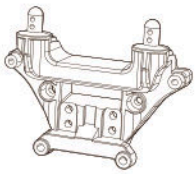	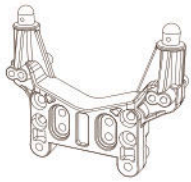	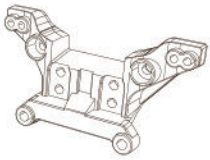
16160	16170C(16212)	16180C(16212)	16170(16213/16218)
Front Upper Gearbox Covers 前齿轮盖	Front Shock Tower 前避震架	Rear Shock Tower 后避震架	Front Shock Tower 前避震架
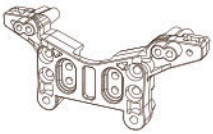	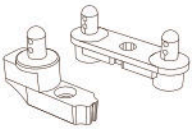	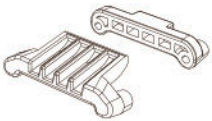	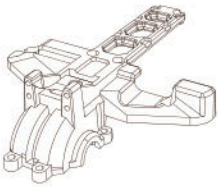
16180(16213/16218)	16282(16213)	16280(16218)	16190
Rear Shock Tower 后避震架	F/R Body Pillars 前后车壳支架	F/R Body Pillars 前后车壳支架	Rear Upper Gearbox Covers 后齿轮盖
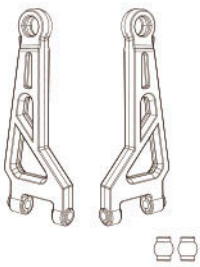	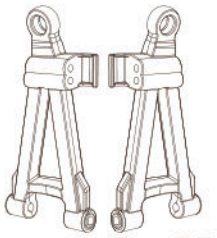	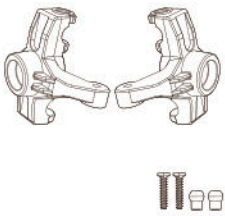	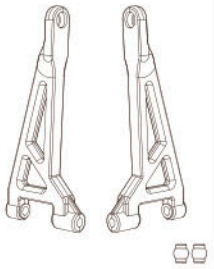
16210	16220	16230	16240
Front Upper Suspension Arms (Including Ball Head) 前上摆臂(含球头)	Front Lower Suspension Arms (Including Ball Head) 前下摆臂(含球头)	Steering Block 转向座	Rear Upper Suspension Arms (Including Ball Head) 后上摆臂(含球头)

Spare Parts 配件表

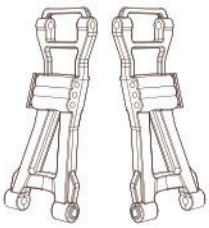	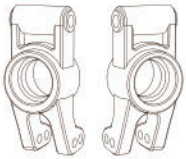		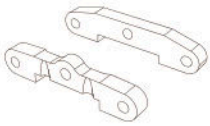
16250	16260	M25425	M1640
Rear Lower Suspension Arms 后下摆臂	Rear Hubs 后固定座	F/R Lower Swing Arm Fixed Shaft 下摆臂固定轴	F/R Reinforced Sheet 前后加强件
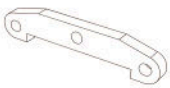			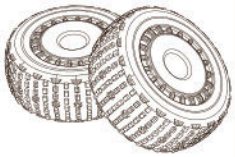
M1640A(16213)	16300BM	16300C2(16213)	16300M2(16213)
Rear Reinforced Sheet 后加强件	Wheel Assembly 车轮组件 (2PCS)	Wheel Assembly 车轮组件 (2PCS)	Wheel Assembly 车轮组件 (2PCS)
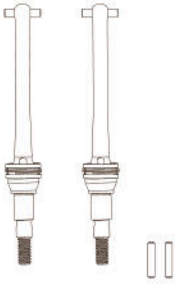		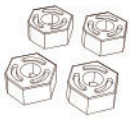	
16410	M20101	16440	M40
Metal F/R CVD Shafts (2 Sets) 轮胎转动组件	Wheel Hex Pins 六角套铁轴 (8PCS)	Wheel Hex 六角套	M4 Wheel Lock Nut M4螺母 (8PCS)

Spare Parts 配件表

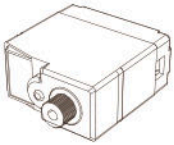		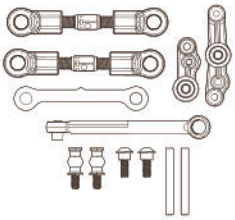	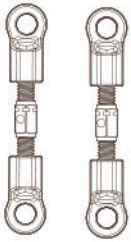
16701	16702	16430P	16431C
Servo 舵机	Servo Saver Assembly 舵机离合摆臂	Steering Assembly 转向传动组件	Steering Linkage 转向拉杆(2PCS)
	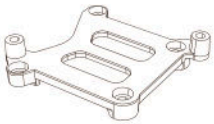	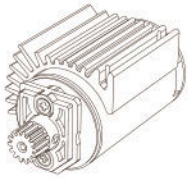	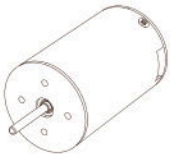
14432C	16270	B284B	B2845
Connecting Rod 转向连杆	ESC/REV Fix Frame 固定件	Motor Assembly 电机组件	Brushless Motor 无刷电机
	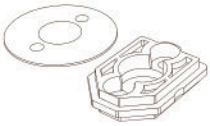	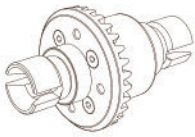	
16392B	16393B	16420Y	16401Y
Motor Pinions 电机输出齿	Motor Guard 电机固定座	Metal Gears Diff Assembly 全金属齿轮差速箱	Spur Gear Assembly (Metal) 传动主齿轮组件(金属)

Spare Parts 配件表

		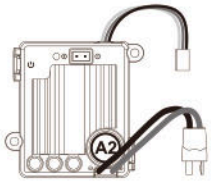	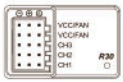
16402Y	16403	E45A2	R30
Drive Gear (Metal) 前锥齿(金属)	Centre Drive Shaft 主轴	Brushless ESC 无刷电子调速器	Receiver 接收器
	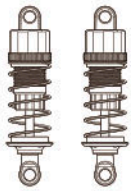	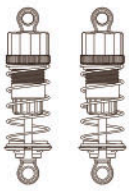	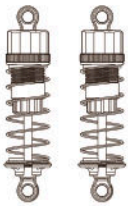
T3D	16510R2	16510R4(16213)	16500R3(16213)
Transmitter 遥控器	Oil Filled Shock 油压避震	Metal Oil Filled Shocks (Front) 金属油压避震(前)	Metal Oil Filled Shocks (Rear) 金属油压避震(后)
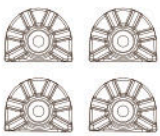		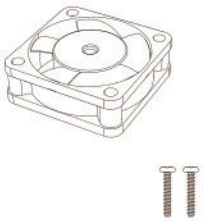	
1650T(16213)	16395B	16397	1865020002S15T
Cover 避震罩	Motor Heatsink 散热片	Motor Fan 风扇	Battery 电池

Spare Parts 配件表

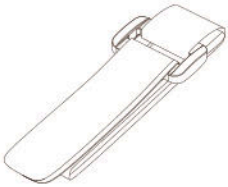		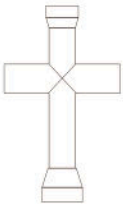	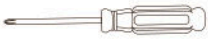
BD30	P2050	P812	P810
Battery Base 电池固定带	USB Charging Cable USB充电线	Hexagonal Wrench 六角扳手	Screwdriver 螺丝刀
			
Q1601	Q1602	M2523	M3294
Steering Pivot Balls 球头 (8PCS)	Steering Pivot Balls 球头 (8PCS)	Rear Fixing Pin 后固定座插销 (4PCS)	Screws 半圆头半牙螺丝 (12PCS)
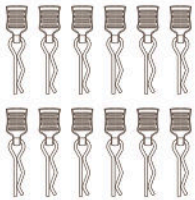			
M001			
Body Clips 车壳扣 (12PCS)			

Screws 螺丝

M2054	Ø2x5mm	12PCS
M26414	Ø2.6x4mm	12PCS
M3030	Ø3x3mm	12PCS
M2354	Ø2.3x5mm	12PCS
M23104	Ø2.3x10mm	12PCS
M23114	Ø2.3x11mm	12PCS
M23124	Ø2.3x12mm	12PCS
M2665	Ø2.6x6.5mm	12PCS
M2684	Ø2.6x8mm	12PCS
M26104	Ø2.6x10mm	12PCS
M26124	Ø2.6x12.5mm	12PCS
M26154	Ø2.6x15mm	12PCS
M261545	Ø2.6x15mm	12PCS
M26645	Ø2.6x6mm	12PCS
M3066	Ø3x6mm	12PCS
M3156	Ø3x15mm	12PCS
HKB2012	Ø2x12mm	12PCS

Others 其他

R1810	Bearing 轴承	8PCS
R168Z	Bearing 轴承	8PCS



MADE IN CHINA

Instructions must be retained since it contains important information.