ST550 SUPER TOURING

#30127 Apex2 Sport ,ST550 Ready-To-Run

1:10 Scale Ready-To-Run 4WD Electric On Road Touring Car Manual

WeAreAE CHAMPIONS by DESIGN
AssociatedElectrics.com

TEAM ASSOCIATED

:: Introduction

Thank you for purchasing this Team Associated product. This assembly manual contains instructions and tips for building and maintaining your new RTR. Please take a moment to read through this manual to help familiarize yourself with these steps. We are continually changing and improving our designs; therefore, actual parts may appear slightly different than in the illustrations. New parts will be noted on supplementary sheets.

:: Vehicle Features

- Steel dog bones and drive axles
- Sealed front and rear gear differentials
- Adjustable hook and loop battery straps
- 550-sized brushed motor
- Programmable ESC (with aftermarket program card)
- Injection-molded brake calipers and rotors
- Aluminum motor plate
- Adjustable shock mounting locations
- Bolt-on steering plates
- Molded one-piece tire rods and steering links
- Adjustable body post height locations
- 25T injection molded servo saver
- Active rear toe suspension design
- Plastic tub main chassis
- Removeable battery box with “shorty” and standard configuration
- POM-filled injection molded pivot balls
- Oilite Bushings

:: Additional

Your new RTR comes factory assembled including radio gear, motor, and ESC.
However, there are some items you will need to complete your kit (refer to website for suggestions):

- AA-size batteries for transmitter (#302 x4)
- 2/3S LiPo battery pack w/High Current T Plug (“shorty” or standard packs).
- Peak Detection Charger or LiPo Compatible Charger

:: Other Helpful Items

- Silicone Shock Fluid (Refer to website for complete listings)
- Green Slime shock lube (AE # 1105)
- Thread Locking Compound (AE # 1596)
- 7 Piece Hex Driver Set (AE # 1650)
- Calipers or a Precision Ruler
- Silicone Diff Fluid (Refer to website for complete listings)
- Cyanoacrylate glue (AE # 1597)
- Body Scissors (AE # 1737)
- FT Nut Drivers (AE #1519)
- Reamer / Hole Punch
- Hobby Knife
- Wire Cutters
- Soldering Iron
- Needle Nose Pliers

:: Hardware - 1:1 Scale View

Flat Head Screws (fhcs)

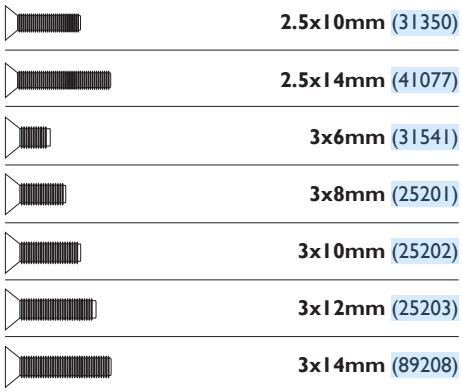

2.5x10mm (31350)
2.5x14mm (41077)
3x6mm (31541)
3x8mm (25201)
3x10mm (25202)
3x12mm (25203)
3x14mm (89208)

Button Head Screws (bhcs)

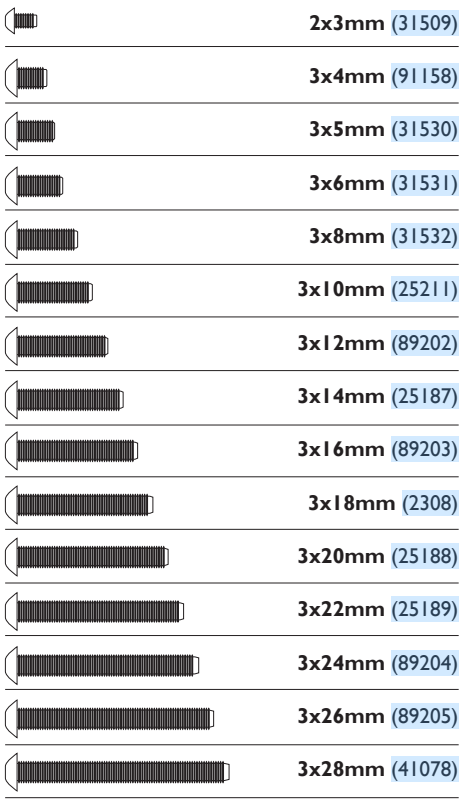

2x3mm (31509)
3x4mm (91158)
3x5mm (31530)
3x6mm (31531)
3x8mm (31532)
3x10mm (25211)
3x12mm (89202)
3x14mm (25187)
3x16mm (89203)
3x18mm (2308)
3x20mm (25188)
3x22mm (25189)
3x24mm (89204)
3x26mm (89205)
3x28mm (41078)

LP Socket Head Screws (lp shcs)

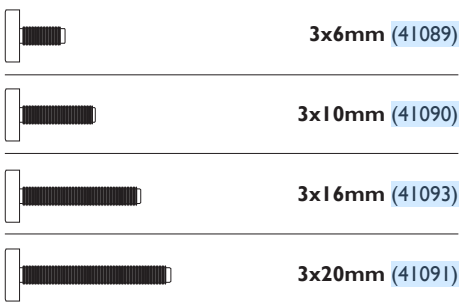

3x6mm (41089)
3x10mm (41090)
3x16mm (41093)
3x20mm (41091)

Socket Head Screws (shcs)

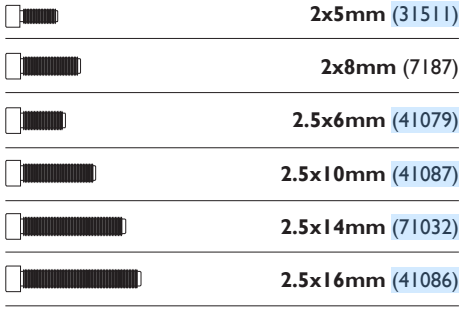

2x5mm (31511)
2x8mm (7187)
2.5x6mm (41079)
2.5x10mm (41087)
2.5x14mm (71032)
2.5x16mm (41086)

Set Screws

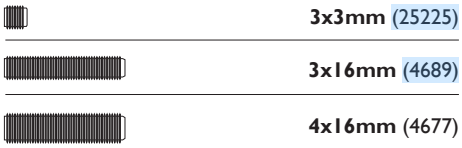

3x3mm (25225)
3x16mm (4689)
4x16mm (4677)

Pivot Balls

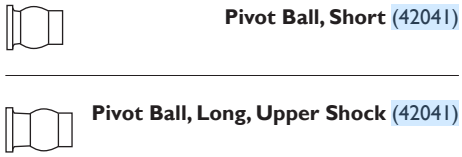

Pivot Ball, Short (42041)
Pivot Ball, Long, Upper Shock (42041)

Locknuts

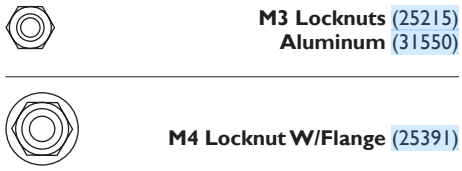

M3 Locknuts (25215)
Aluminum (31550)
M4 Locknut W/Flange (25391)

Bearings

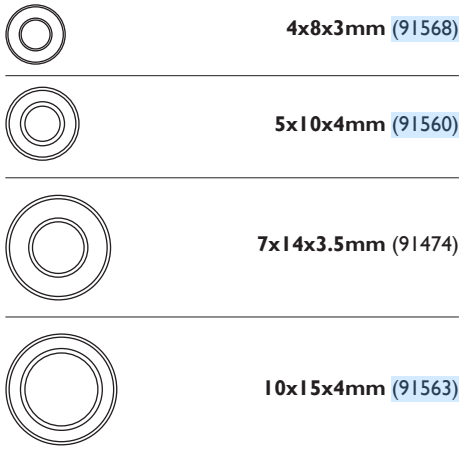

4x8x3mm (91568)
5x10x4mm (91560)
7x14x3.5mm (91474)
10x15x4mm (91563)

Shims and Washers

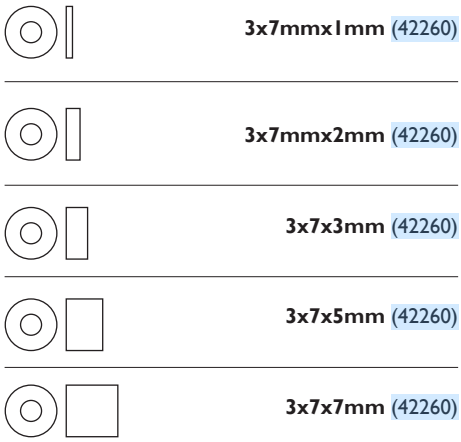

3x7mmx1mm (42260)
3x7mmx2mm (42260)
3x7x3mm (42260)
3x7x5mm (42260)
3x7x7mm (42260)

Misc. Screws

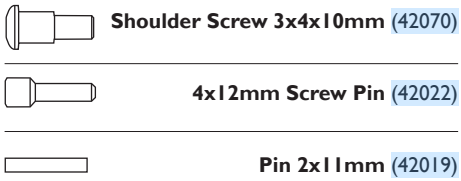

Shoulder Screw 3x4x10mm (42070)
4x12mm Screw Pin (42022)
Pin 2x11mm (42019)

:: Table of Contents

1..... Cover

2..... Introduction

3.....1:1 Hardware "Fold Out"

4..... Table of Contents

5 - 7.....Quick Start Guide

8.....Shock Build

8.....Gear Differential Build

9 - 11.....Front / Rear Suspension Build

11 - 12.....Chasssis Build

12 - 14.....Electronics Build

14 - 15.....Tires and Body Build

17.....Optional Battery Configuration

18..... Back Cover

:: Notes



This symbol indicates a special note or instruction in the manual.



This symbol indicates a Racers Tip.



There is a 1:1 hardware foldout page in the front of the manual. To check the size of a part, line up your hardare with the correct drawing until you find the exact size. Each part in the foldout has a number assigned to it for ordering replacement parts.

Associated Electrics, Inc.
21062 Bake Parkway.
Lake Forest, CA 92630

Customer Service
Tel: 949.544.7500
Fax: 949.544.7501

:: Quick Start Guide

Battery Charging Steps and Safety:

Remove the battery from the vehicle before charging.
Place battery on a fire resistant surface.
Avoid any contact with water or other liquids.
Be sure to select the correct charging mode for the type of battery you are charging.

ALWAYS use a compatible charger for charging your batteries.

Caution: Never leave the battery unattended while charging. Always disconnect the charger from the power source when finished charging.

Caution: Always disconnect the battery when you are finished driving the vehicle.



Peak Detection Quick Charger

:: Quick Start Guide - (cont.)

Battery Installation:

1. Install the battery with the battery wires directed towards the front of the vehicle.
2. Secure the hook and loop strap near the rear shock tower.
3. Secure the hook and loop strap near the front shock tower.

You may move the foam pad to either the front or the rear of the battery compartment to adjust the weight balance of the vehicle.

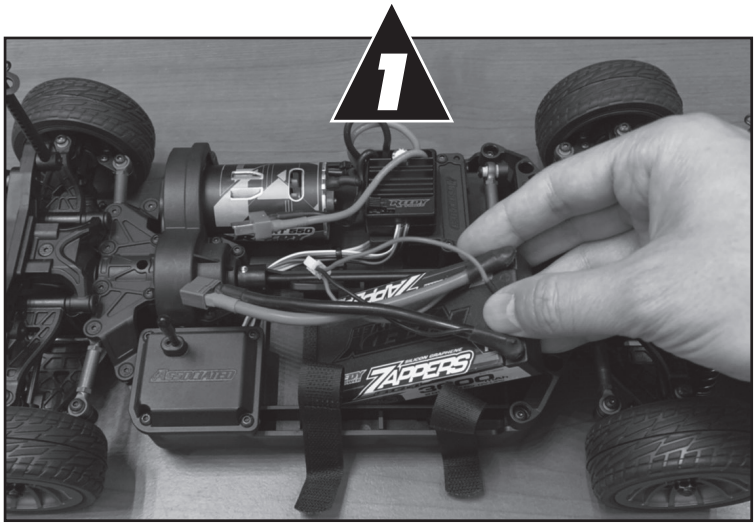

:: Quick Start Guide - (cont.)

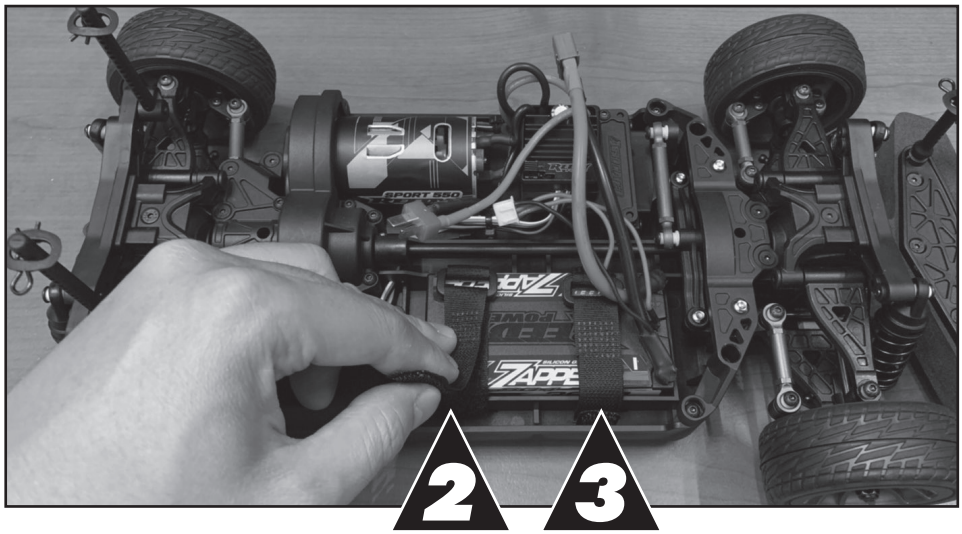

:: Quick Start Guide - (cont.)

Battery Notes and Tip:

Connect the battery as shown.
Disconnect the battery when not in use!

LiPo: LiPo batteries (lithium polymer) are high current rechargeable batteries. LiPo batteries offer extended run time and peak performance over NiMH batteries. They require a peak detection charger designed specifically for LiPo batteries. These batteries require special care and handling.
LiPo batteries are recommended for advanced users only!
ALWAYS charge a LiPo battery in LiPo mode.

If using a 3S LiPo battery, use a smaller pinion gear as a starting point (use part #1335 17T Pinion). This provides the correct gear ratio required for the more powerful 3S LiPo battery. Gearing will depend on the surface you are running on, and the size of the track/area that you are driving in.

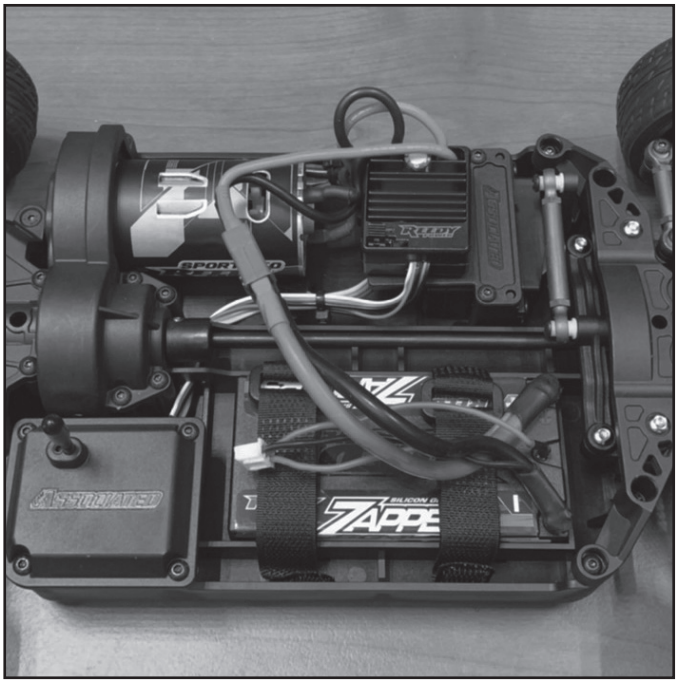

:: Quick Start Guide - (cont.)

Radio System Tuning and Controls:

RULE: Transmitter on First/Vehicle on Second,
Vehicle off First/ Transmitter off Last!

1) Slide the battery cover to remove cover.
2) Install alkaline or rechargeable AA size batteries into the battery holder.
3) Slide the battery cover back into place making sure it is completely closed and secure.
4) Turn the power ON. If the power indicator LED fails to light, check the batteries for insufficient contact or incorrect polarity.





On/Off Switch

:: Quick Start Guide - (cont.)

Radio System Tuning and Controls:

DO NOT hold the trigger when turning on the radio.

If using optional battery for transmitter, be sure to plug it in correctly. Plugging in a battery backwards can cause damage.

Refer to Radio owners manual for more in-depth instructions on radio operation and functions.

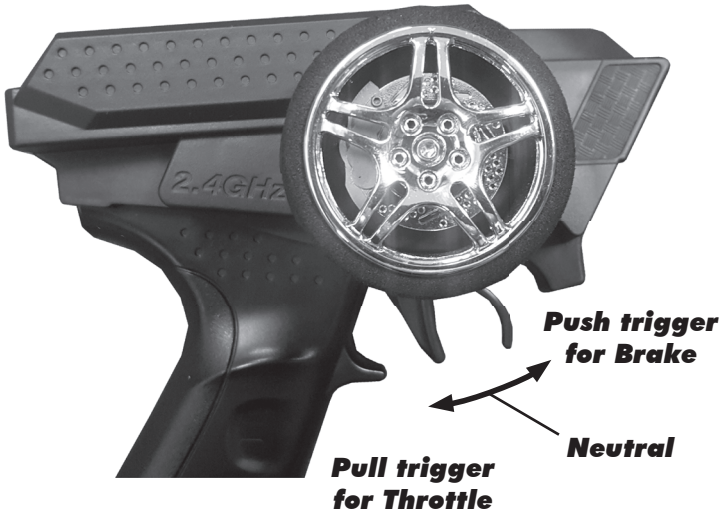

Throttle set to Neutral!



Adjust steering trim so front wheels point straight.

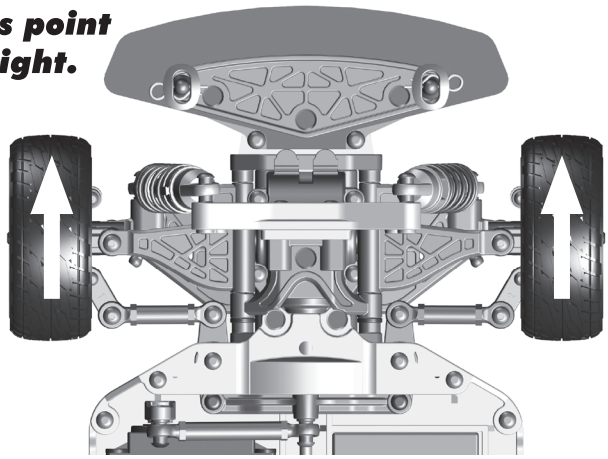

:: Quick Start Guide - (cont.)

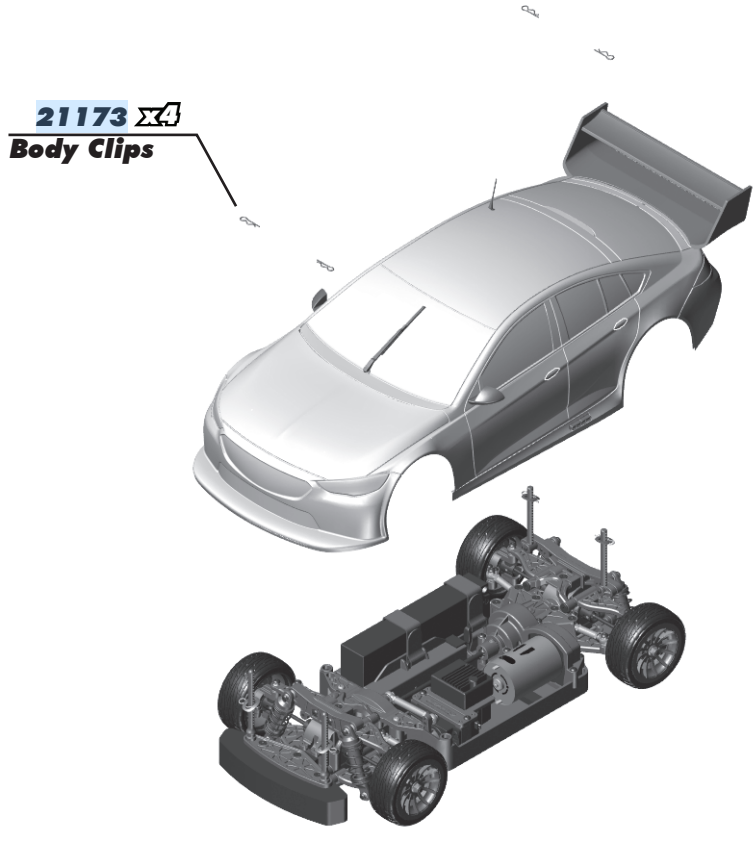

Install body and body clips. Ready to go!

:: Shocks Build

Build 4

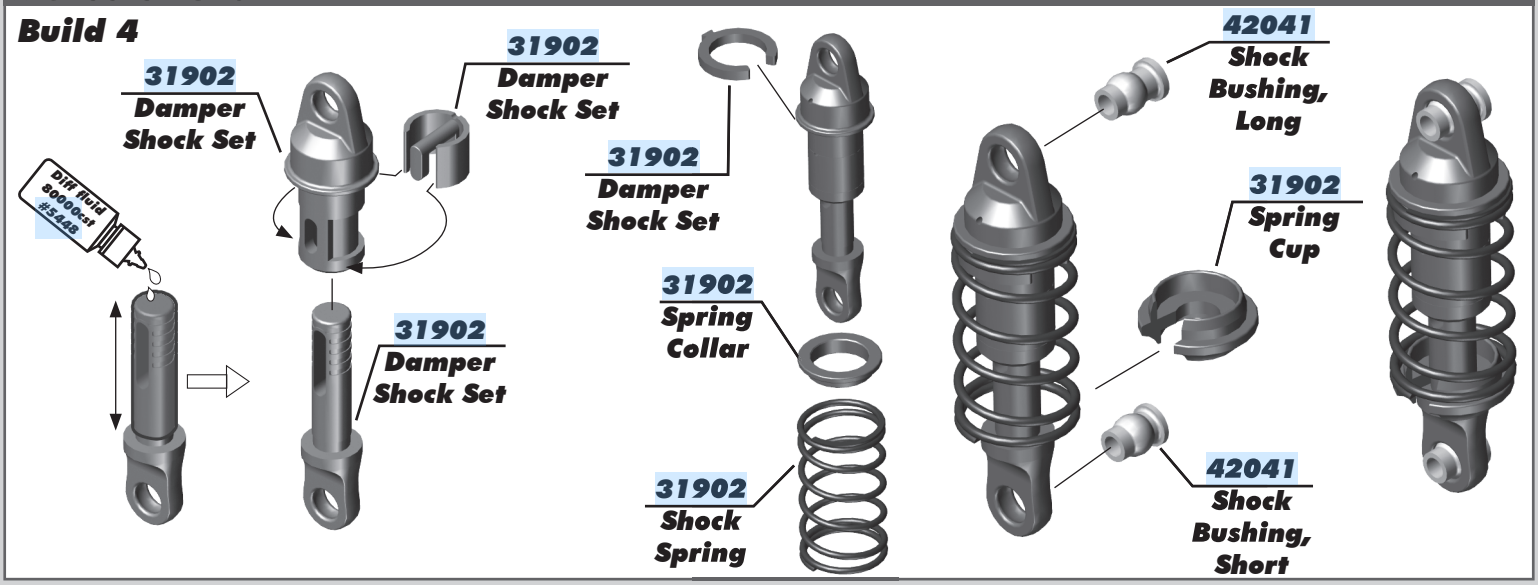

:: Gear Diff Build - Step 1

Build 2

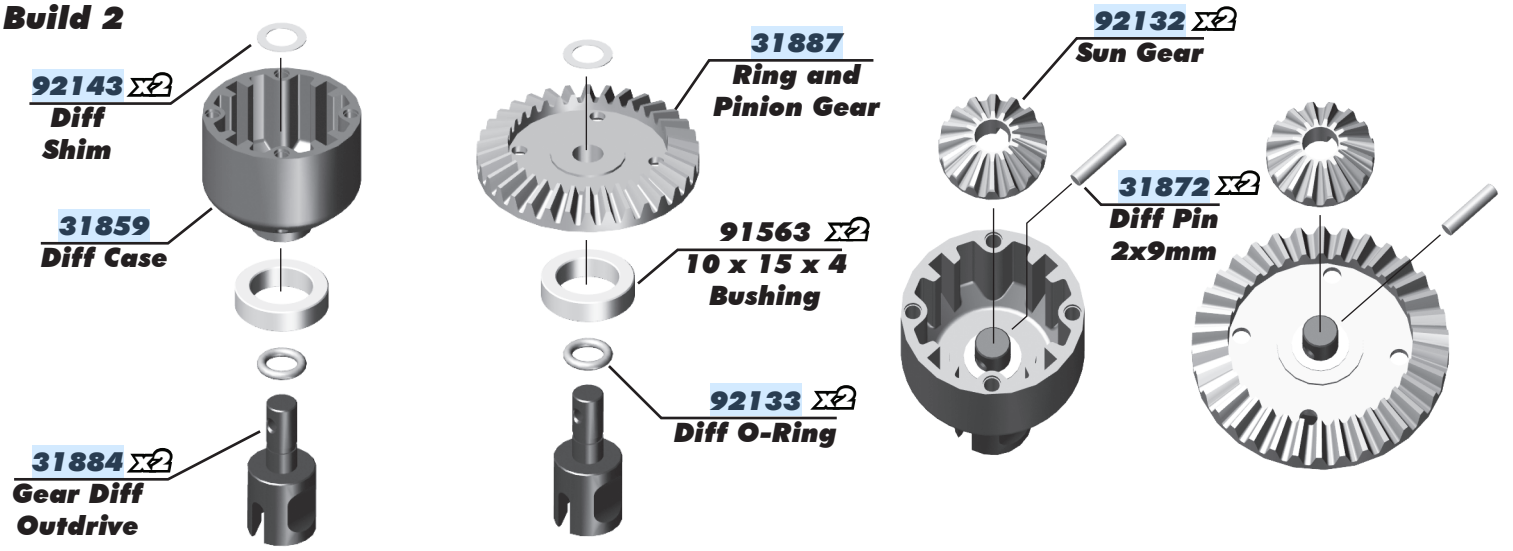

:: Gear Diff Build - Step 2

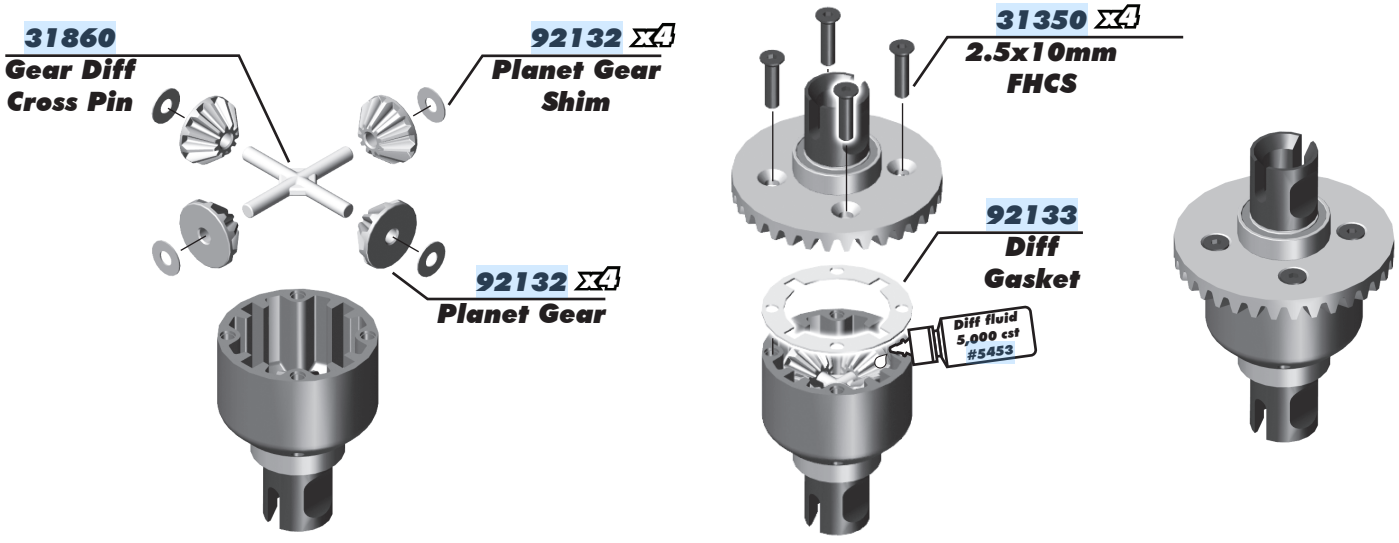

:: Front / Rear Suspension Build - Step 1

Build 2

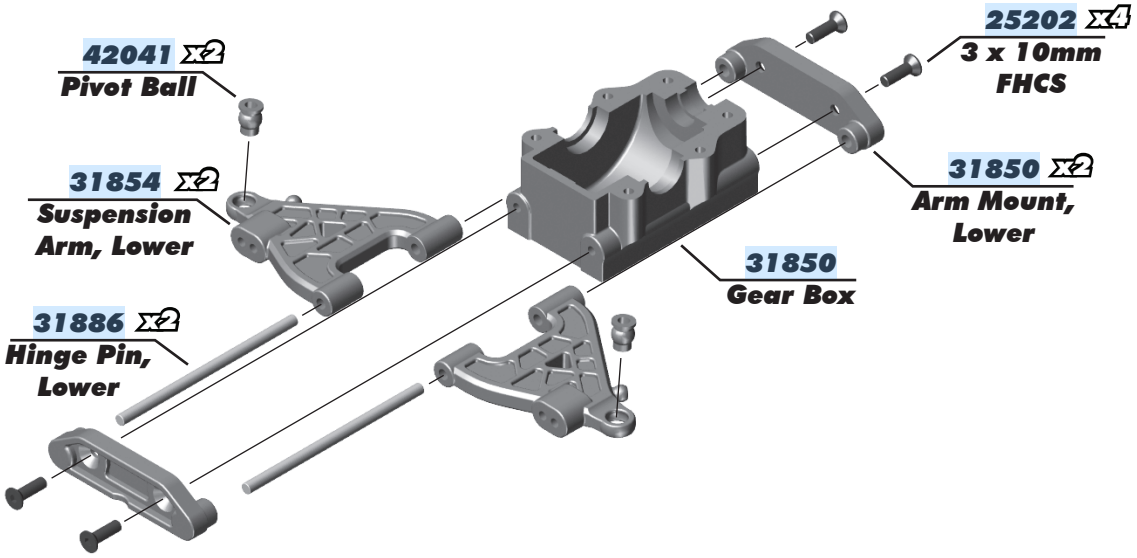

:: Front / Rear Suspension Build - Step 2

Save for Front Gearbox

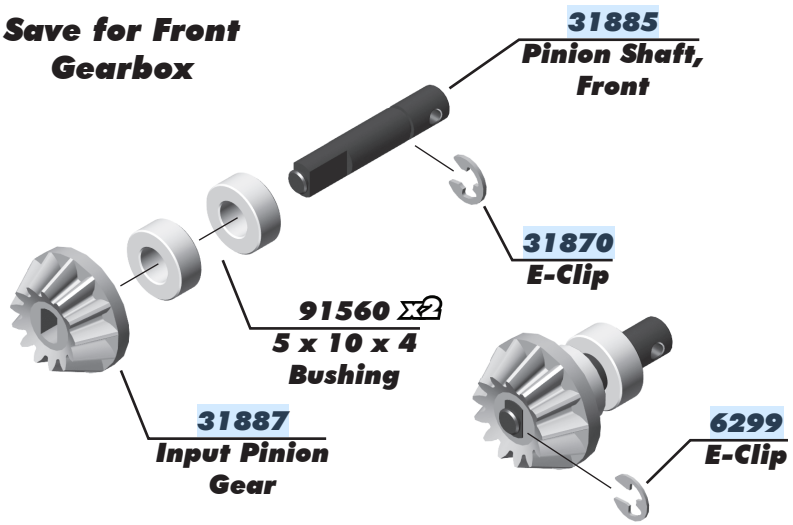

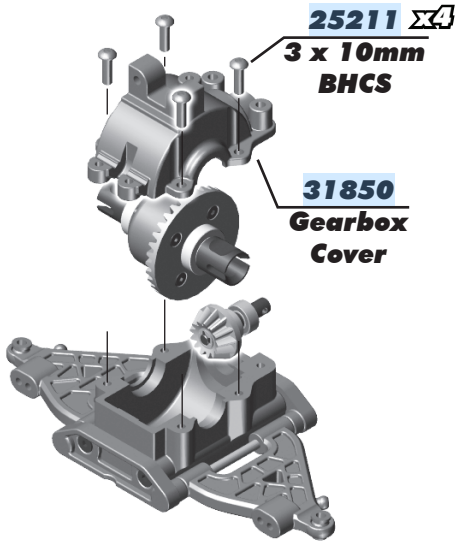

:: Front / Rear Suspension Build - Step 3

Save for Rear Gearbox

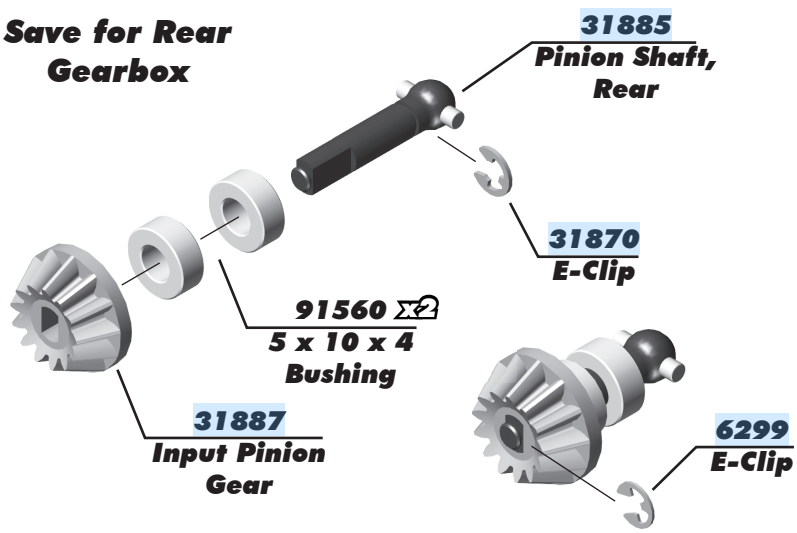

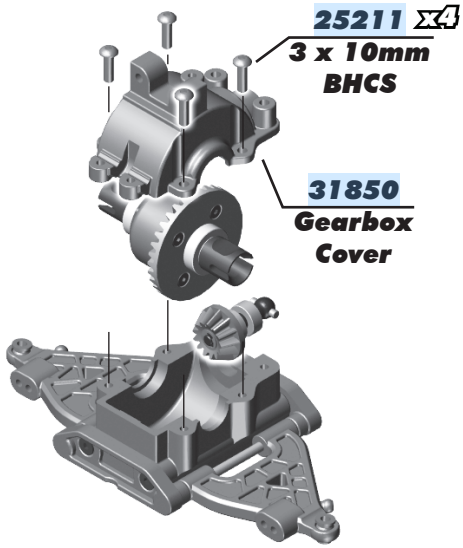

:: Front / Rear Suspension Build - Step 4

Build 4

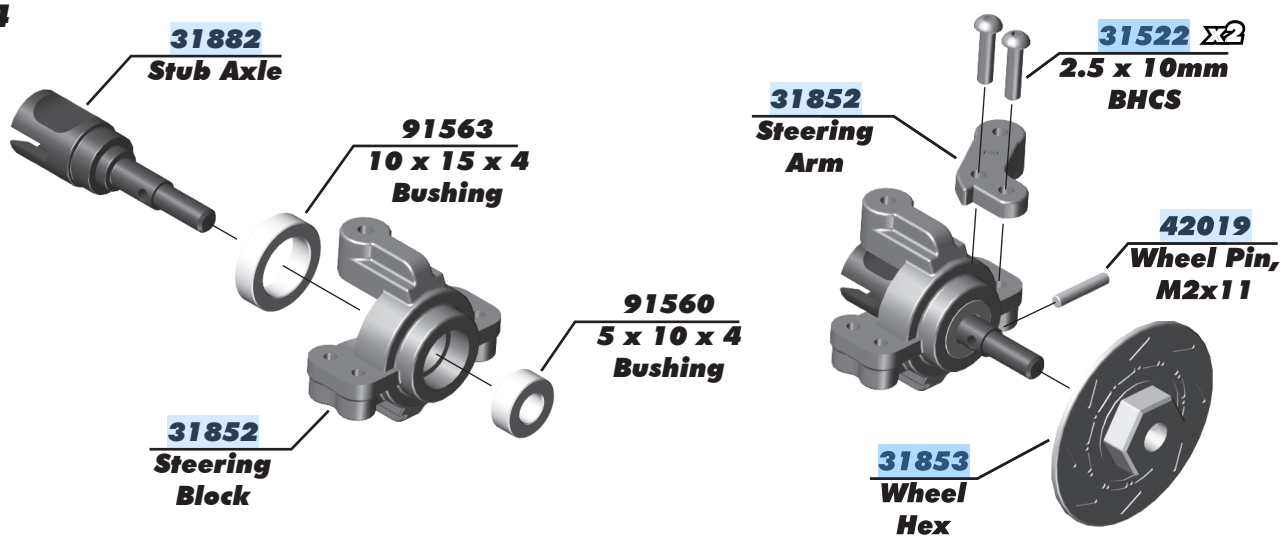

:: Front / Rear Suspension Build - Step 5

Build 4

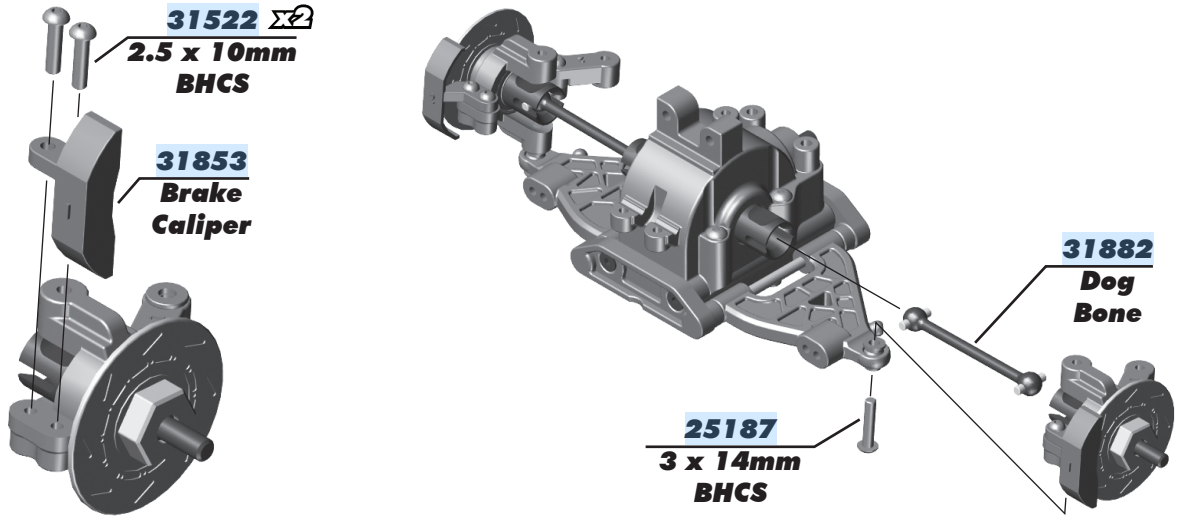

:: Front / Rear Suspension Build - Step 6

Build 2

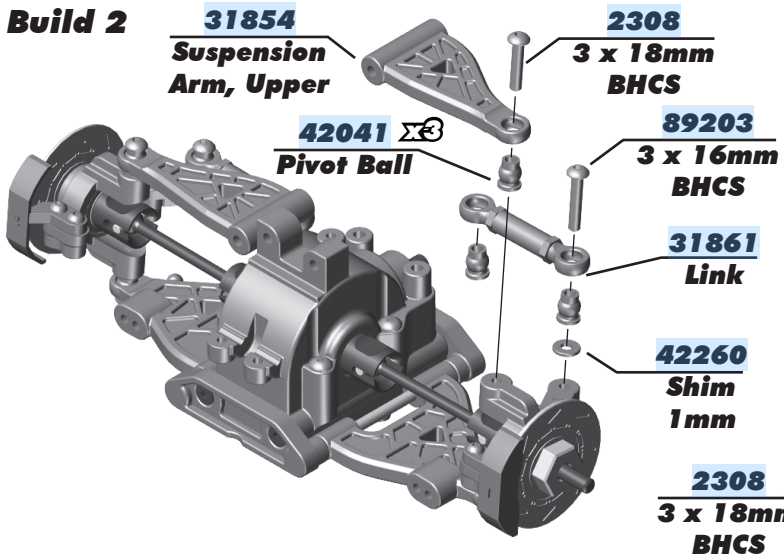

Build Front

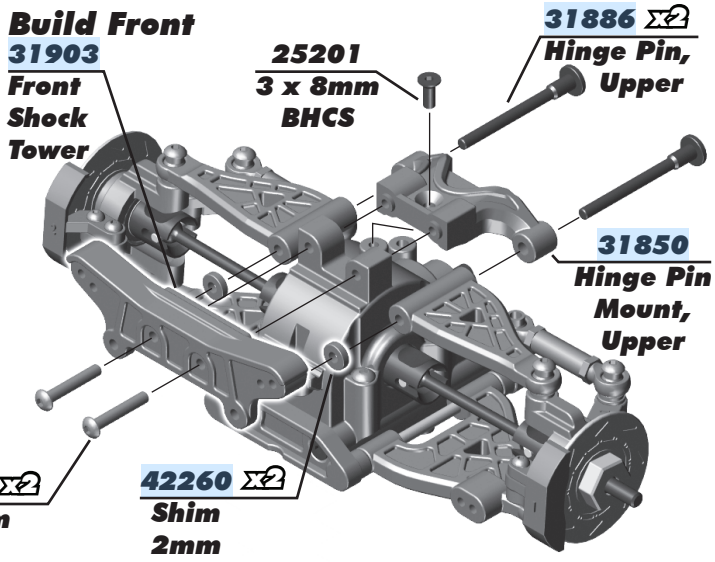

:: Rear Suspension Build - Step 7

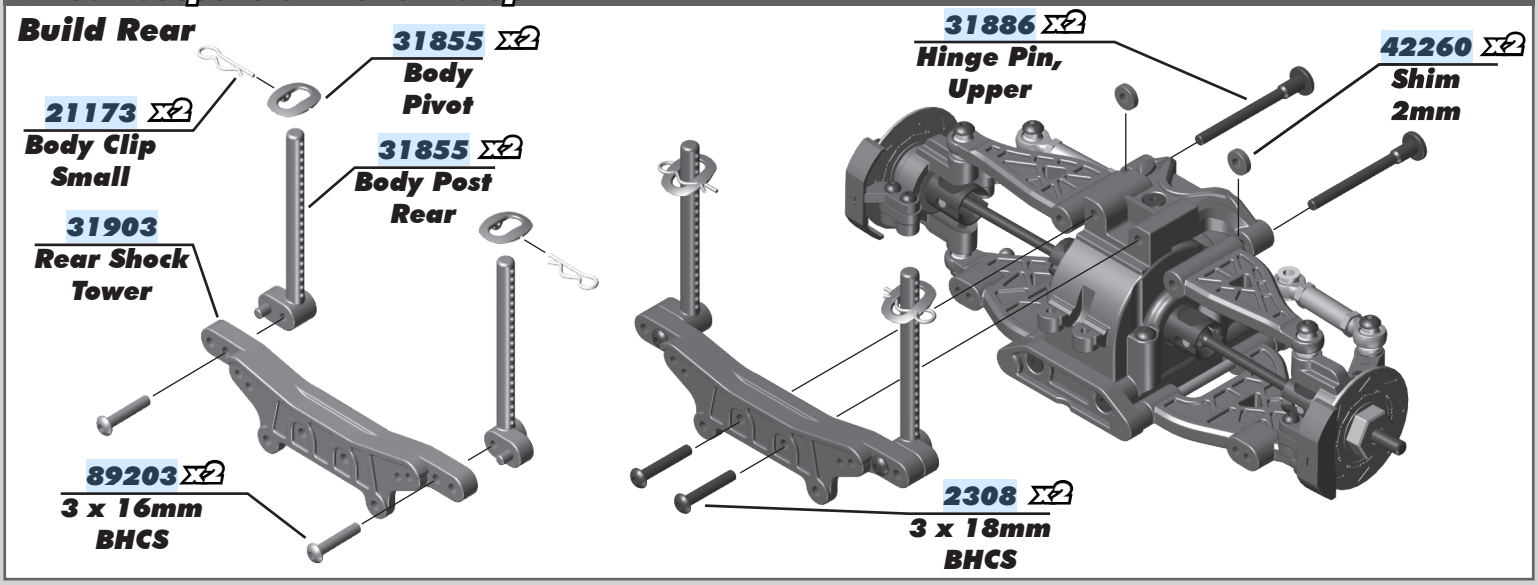

:: Front / Rear Suspension Build - Step 8

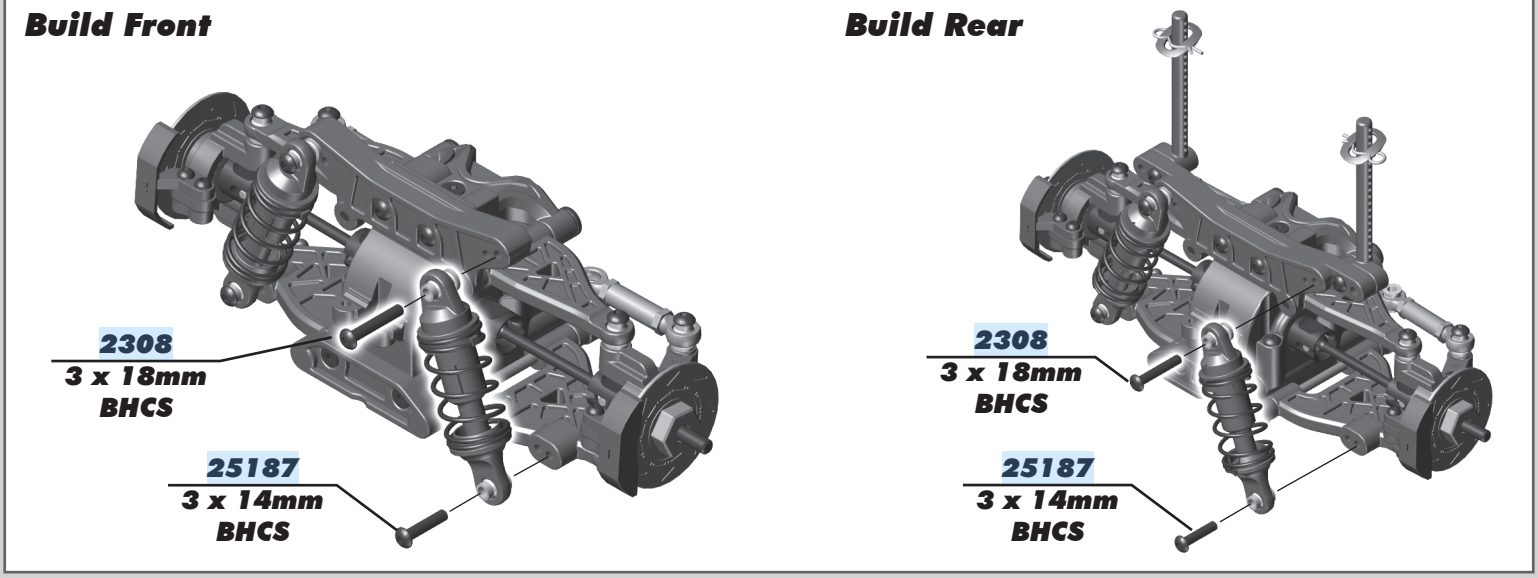

:: Chassis Build - Step 1

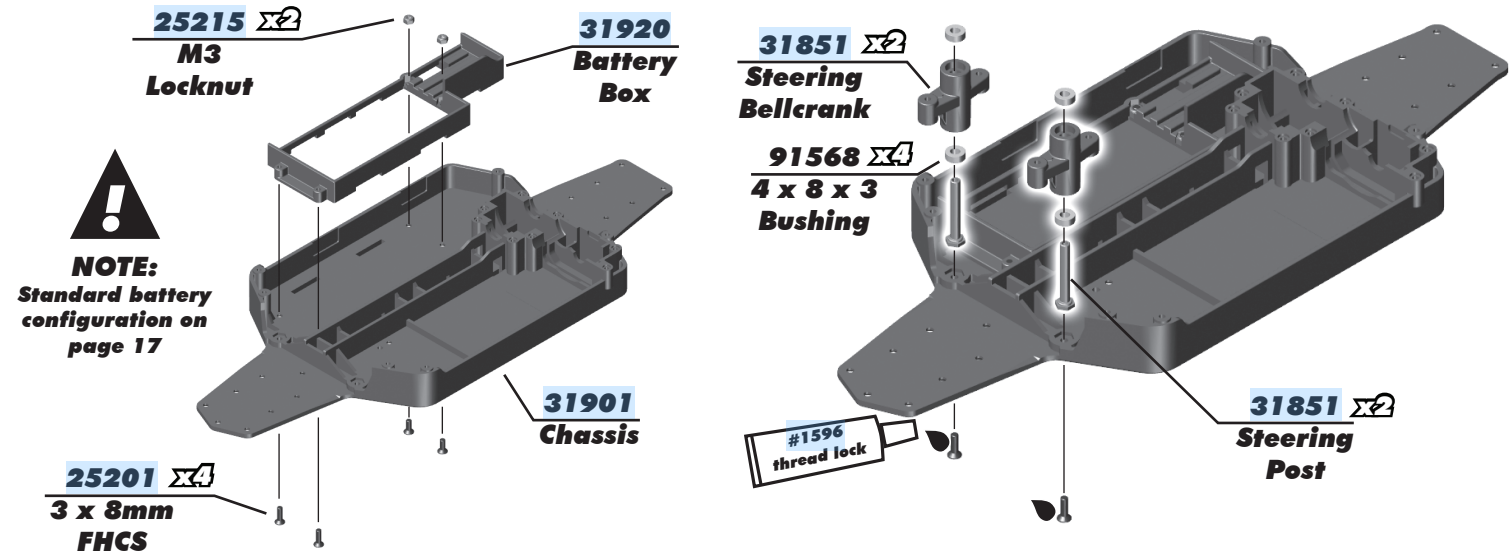

:: Chassis Build - Step 2

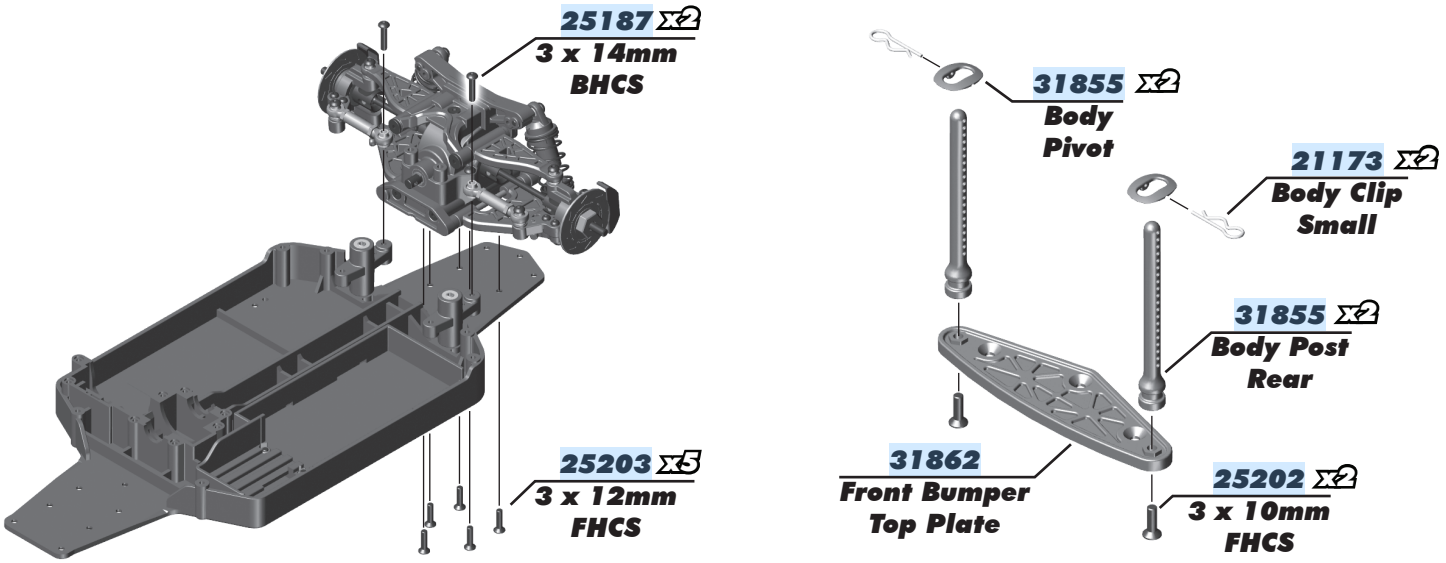

:: Chassis Build - Step 3

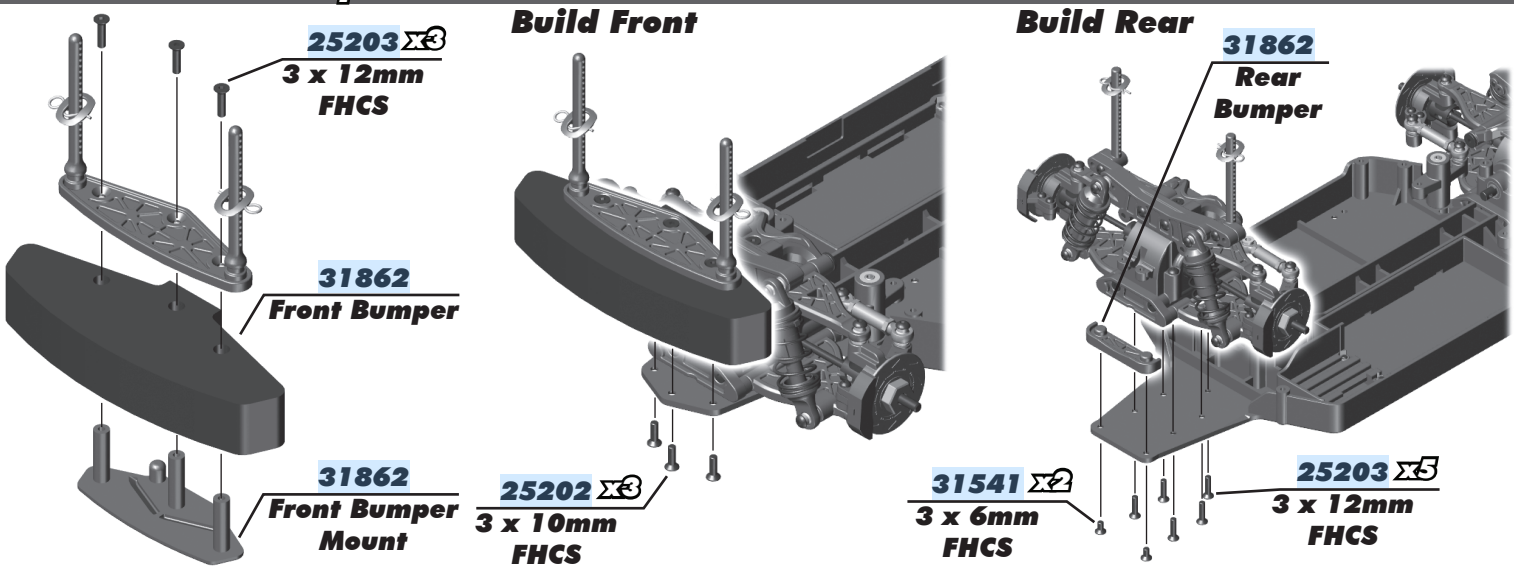

:: Electronics Build - Step 1

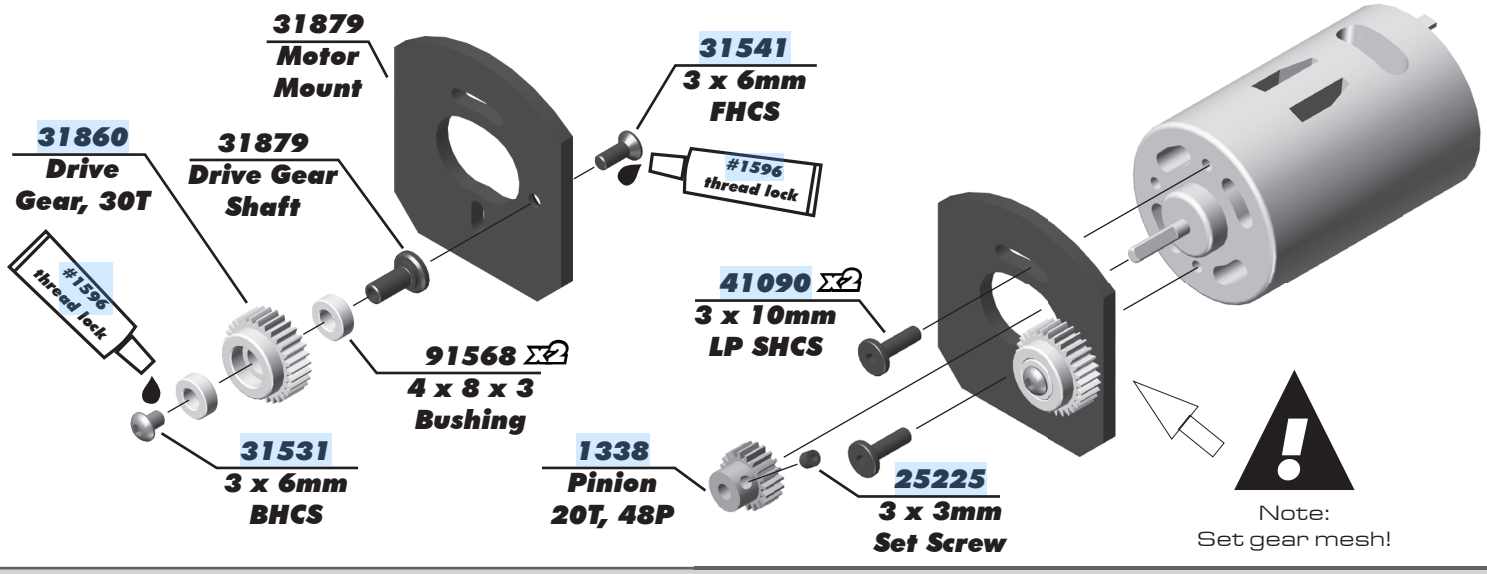

:: Electronics Build - Step 2

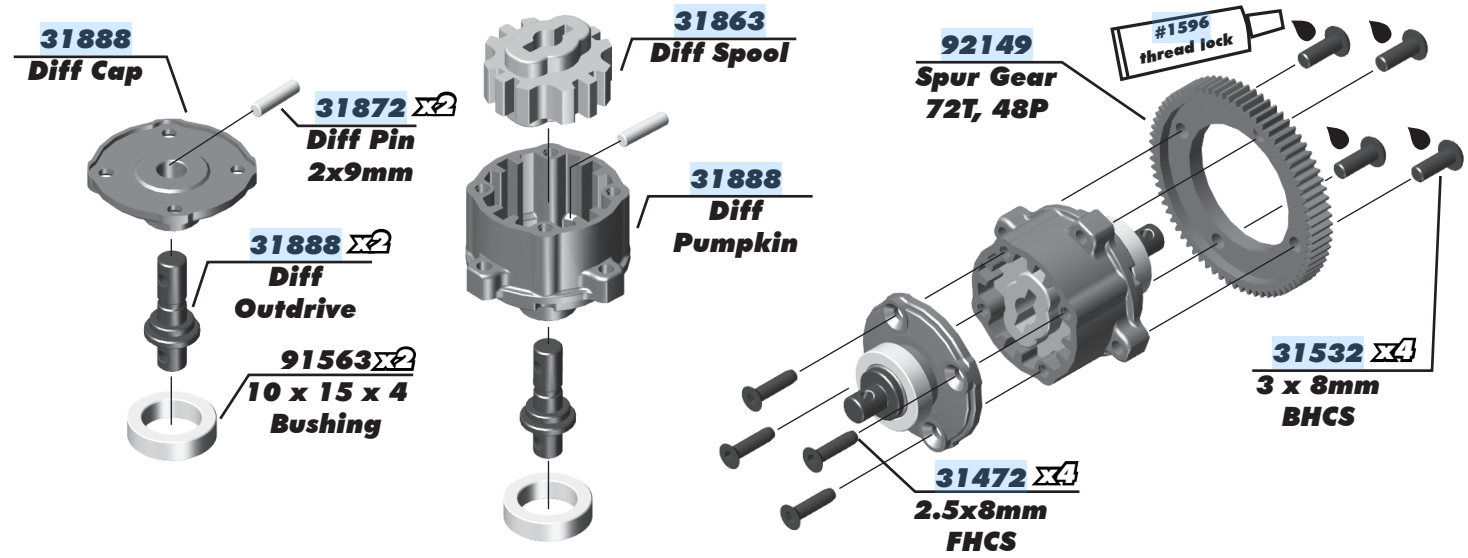

:: Electronics Build - Step 3

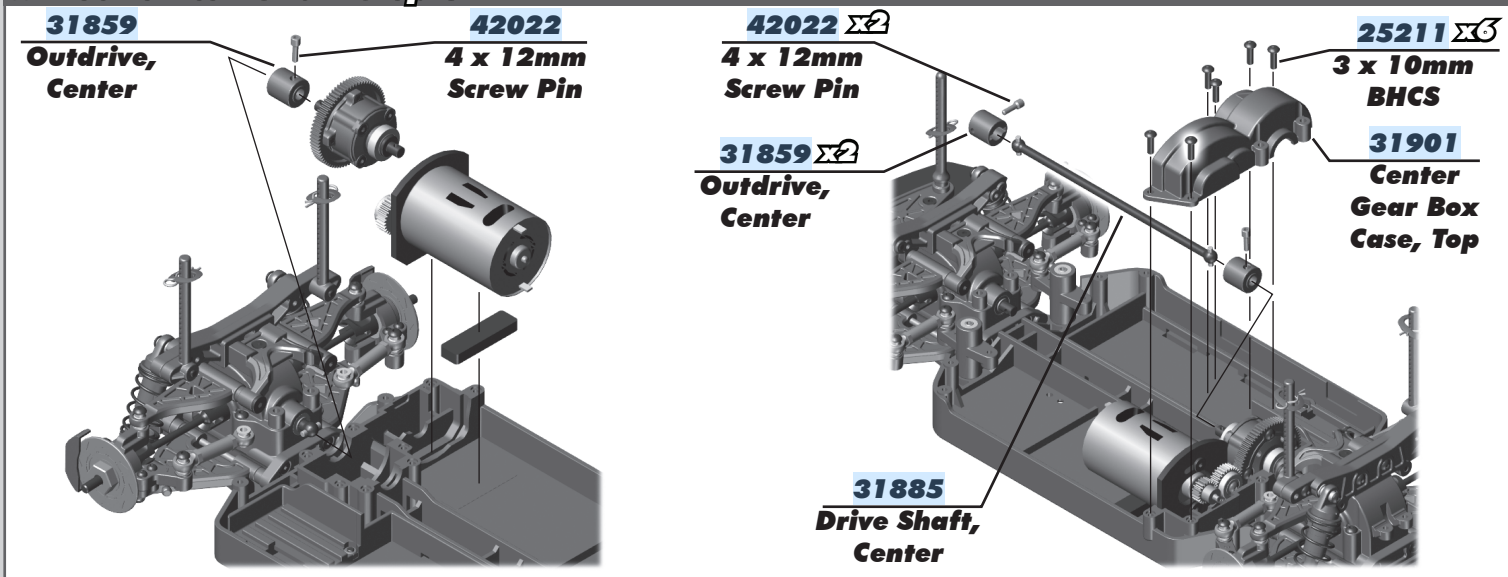

:: Electronics Build - Step 4

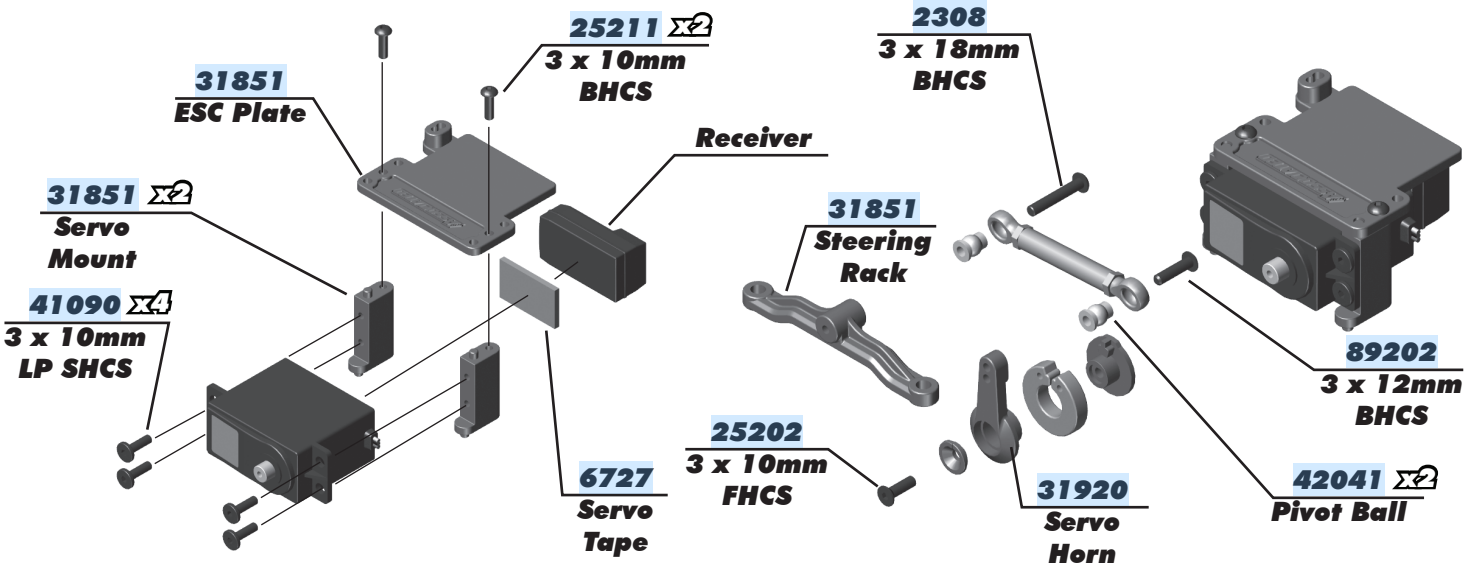

:: Electronics Build - Step 5

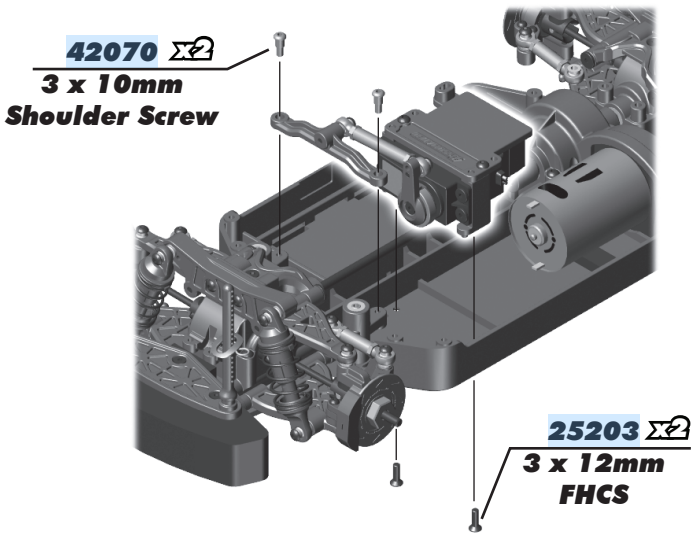

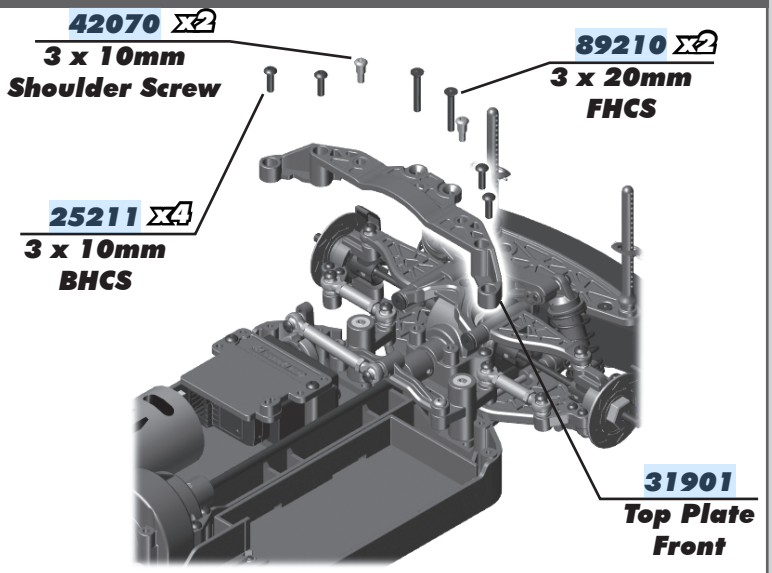

:: Electronics Build - Step 6

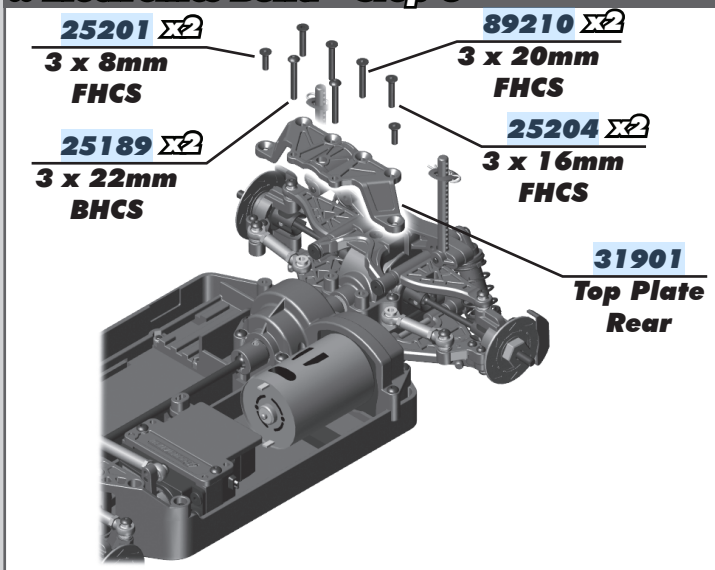

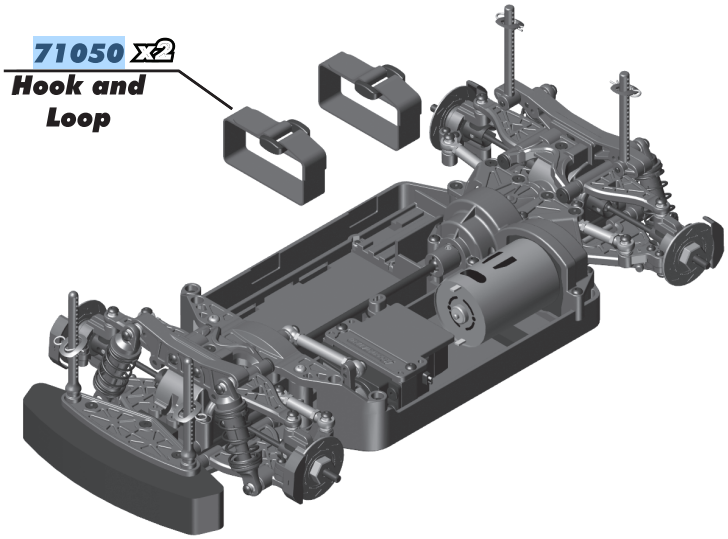

:: Electronics Build - Step 7

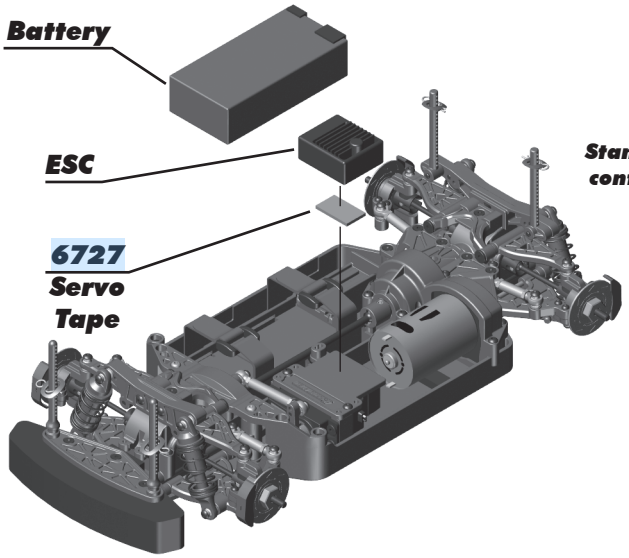

NOTE:
Standard battery configuration on page 17

:: Tires and Body Build - Step 1

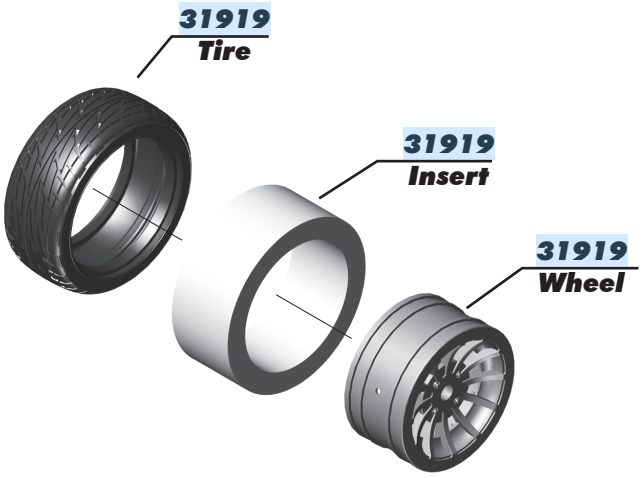

:: Tires and Body Build - Step 2

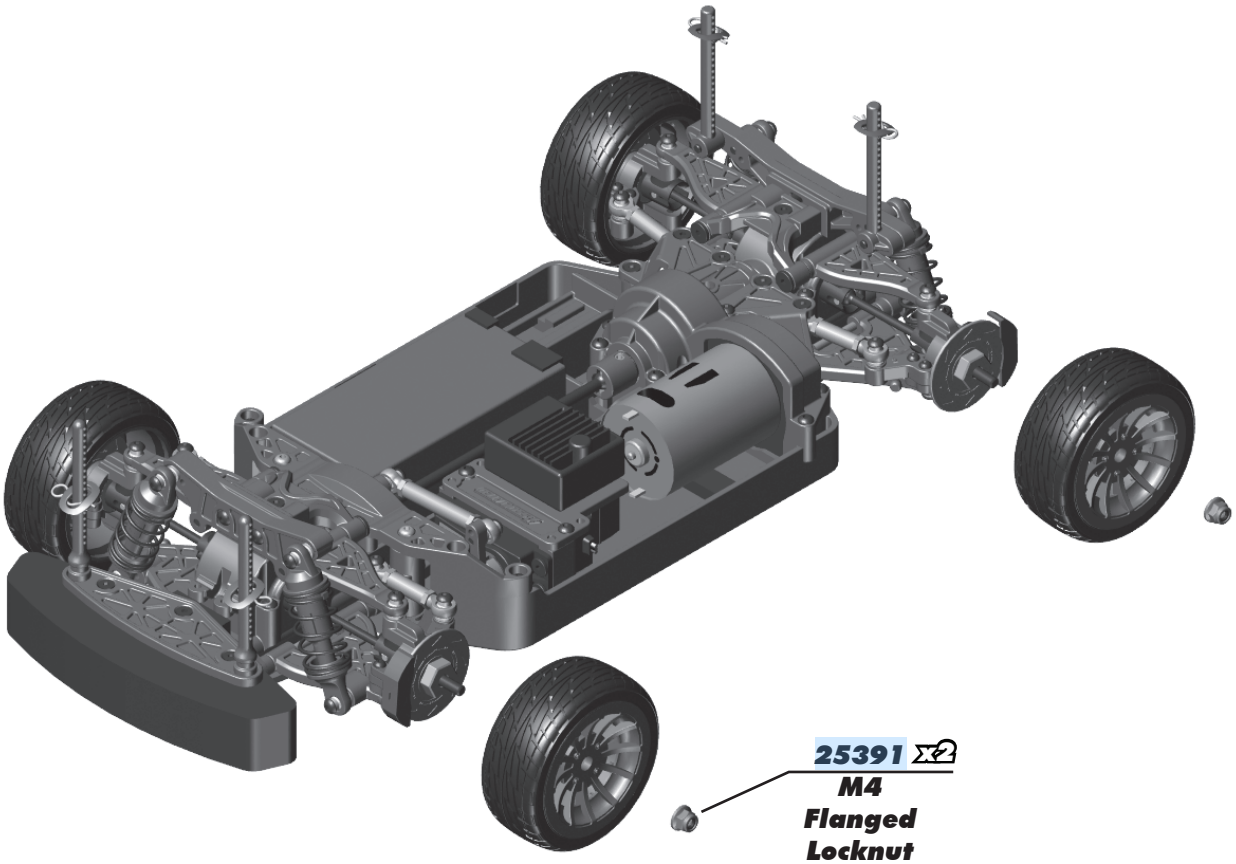

:: Tires and Body Build - Step 3

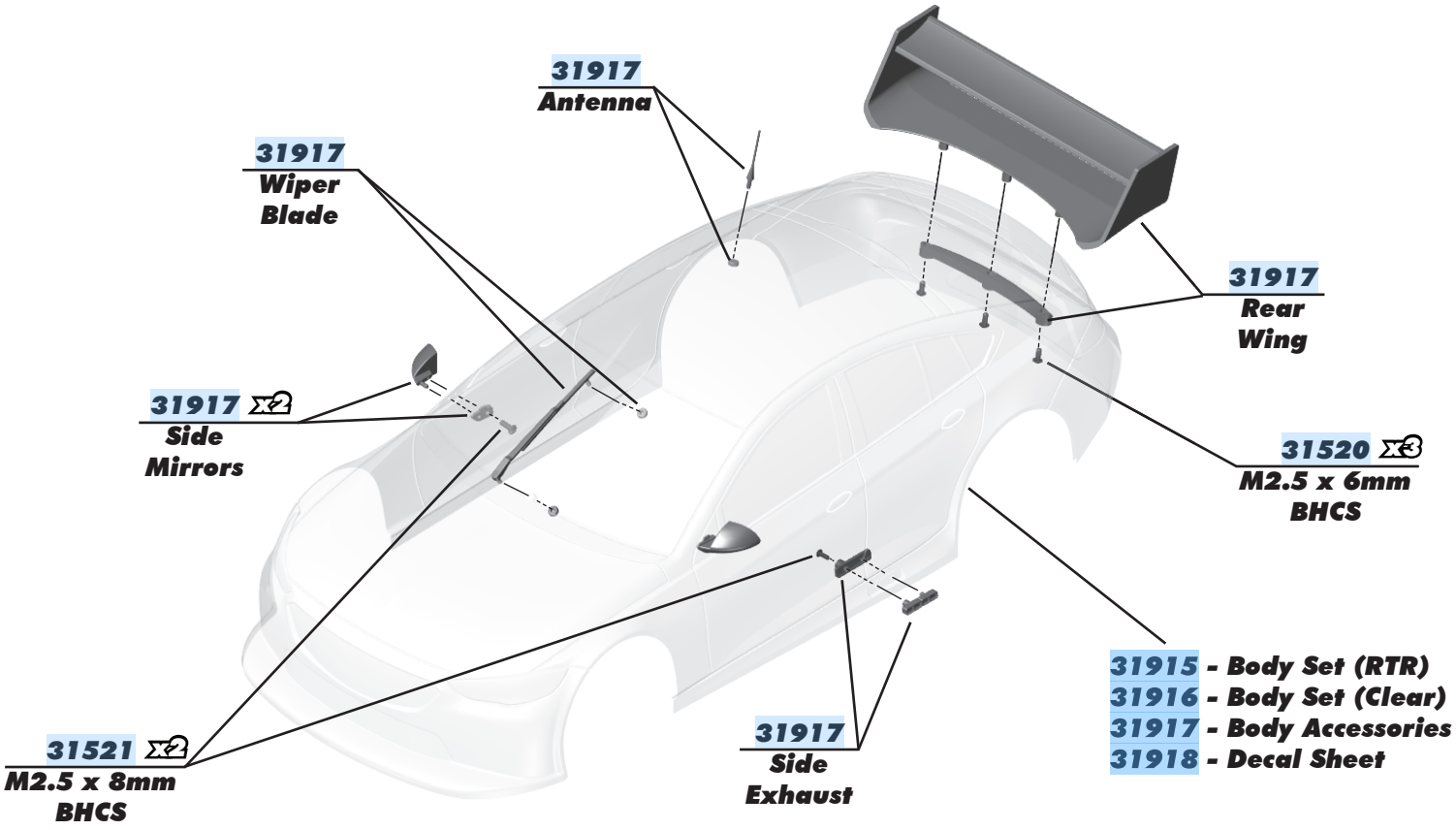

:: Tires and Body Build - Step 4

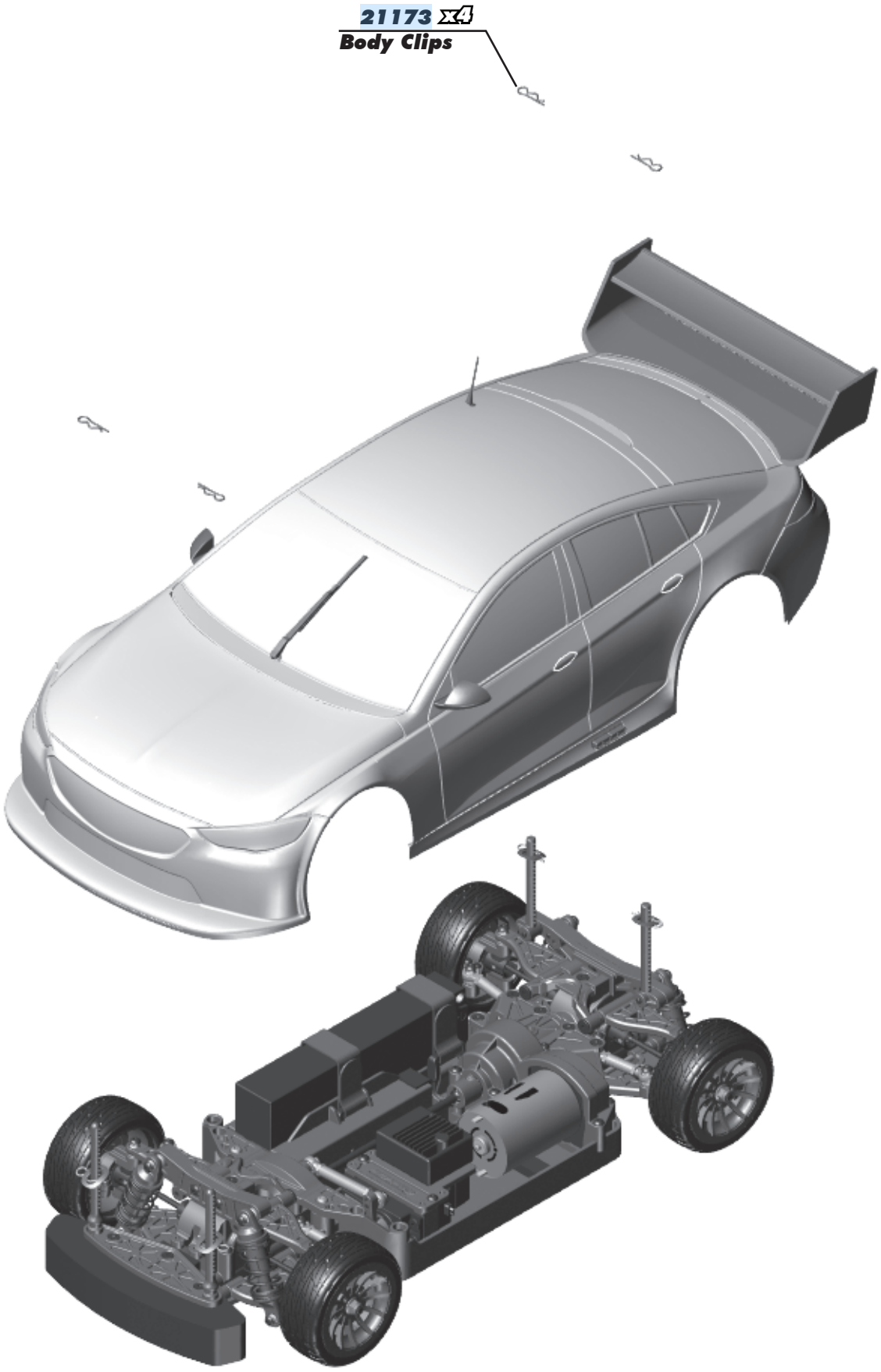

:: Optional Battery Configuration

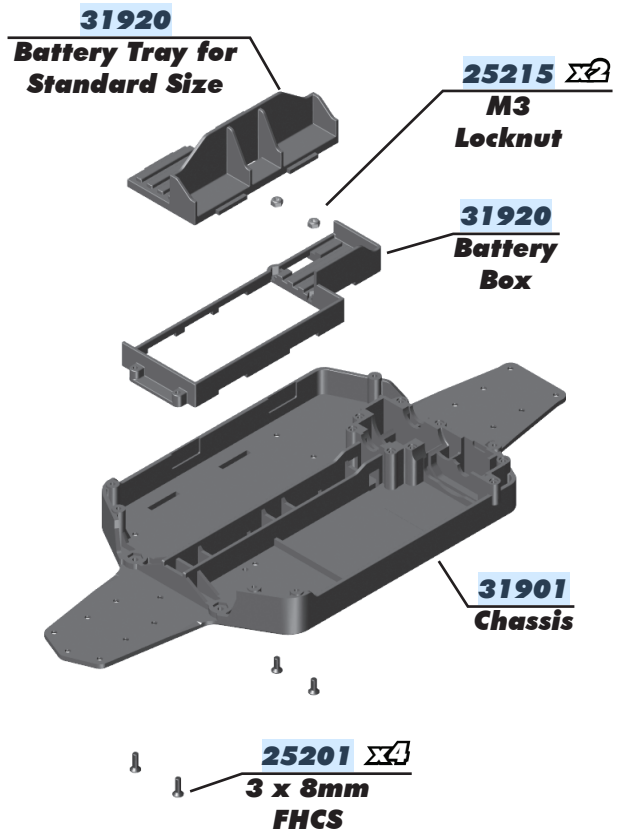

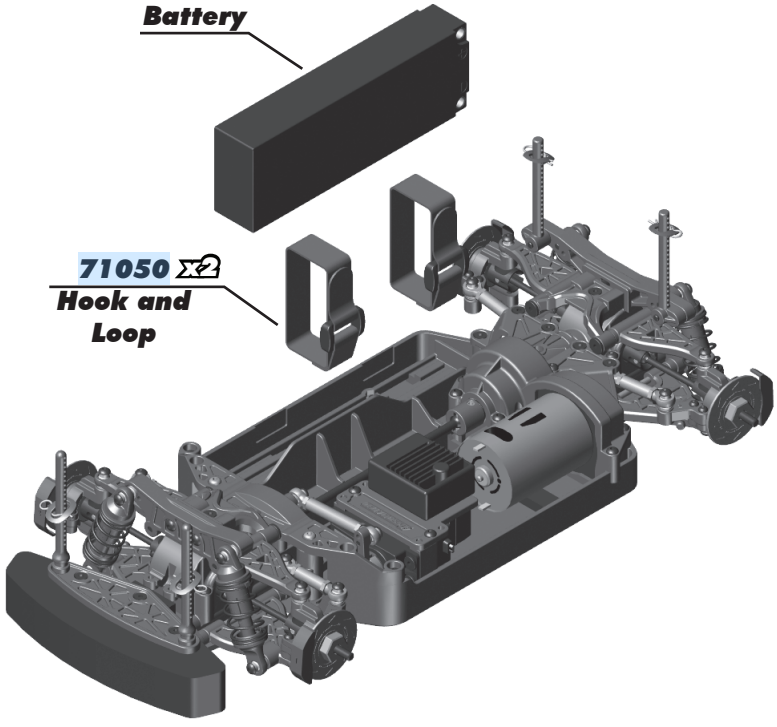

FIND IT ON ASSOCIATEDELECTRICS.COM

CARS & TRUCKS



Vehicle Spare Parts
GO TO:
AssociatedElectrics.com ➡
Team Associated tab ➡
Cars & Trucks ➡
Scroll to your vehicle ➡
Parts & Accessories link

SETUP SHEETS & MANUALS



Setups and Manuals
GO TO:
AssociatedElectrics.com ➡
Team Associated tab ➡
Manuals & Setups ➡
Scroll to your vehicle

A-TEAM APPS



Tuning Guides & Tips
GO TO:
AssociatedElectrics.com ➡
Support ➡
A-Team Apps

ASSOCIATED ELECTRICS
Since 1965

Associated Electrics, Inc.
21062 Bake Parkway Lake Forest, CA 92630 USA

call: (949) 544-7500 - fax: (949) 544-7501

Check out the following web sites for all of our kits, current products, new releases, setup help, tips, and racing info!

www.AssociatedElectrics.com

FOLLOW US ON SOCIAL MEDIA

TeamAssociated
ReedyPower

@TeamAssociatedRC
@ReedyPower

@Team_Associated
@ReedyPower