

THE FIRST IFMAR OFF ROAD WORLD CHAMPIONSHIPS

"Jammin" Jay Halsey
1985 IFMAR Off Road Stock World Champion

WORLD CHAMPIONS.

RC10 JAY HALSEY EDITION

1:10 SCALE ELECTRIC COMPETITION OFF-ROAD CAR KIT

1985
IFMAR
OFF-ROAD WORLD CHAMPION
STOCK CLASS

NOVAK

Jammin' Jay

6

Reedy Modifieds

TEAM ASSOCIATED

:: Introduction

Thank you for purchasing this Team Associated product. This assembly manual contains instructions and tips for building and maintaining your new Kit. Please take a moment to read through this manual to help familiarize yourself with these steps.

We are continually changing and improving our designs; therefore, actual parts may appear slightly different than in the illustrations. New parts will be noted on supplementary sheets located in the appropriate parts bags.
Check each bag for these sheets before you start to build.

:: KIT Features

Features in the Jay Halsey RC10 - Kit:

- Black G10 front shock tower
- JG replica front bumper
- Gold anodized 6061-T6 aluminum monocoque tub chassis
- Factory etched with iconic AE logo and Jay Halsey signature!
- Fully adjustable four wheel independent suspension
- Long travel, fluid filled Gold aluminum coil over shocks
- Low profile sealed six-gear transmission
- VariLok adjustable ball differential
- Competition modular wheels
- Knobby front tires just like the ones Jay used at the IFMAR Worlds
- Clear ProTech body with driver figure
- 3-pcs Wing
- New decal sheet

:: Additional

Your new RC10 Kit comes as a kit. There are some items you will need to complete your kit (refer to website for suggestions):

- R/C two channel surface frequency radio system
- Electronic Speed Control (ESC)
- R/C Electric Motor
- Steering Servo
- Servo Horn (AE #89007)
- 2S, 7.4V Lipo stick battery or 7.2V NiMH battery
- Peak detection battery charger
- Retaining Ring Pliers
- Polycarbonate specific paint
- Thread Lock (AE #1596)
- Pinion gear, size to be determined by type and wind of motor you use

Tools included:
- Allen wrenches (.035", .050", 1/16", 3/32")
- Shock building tool

:: Other Helpful Items

- Silicone Shock Fluid (Refer to website for complete listings)
- Tire Adhesive (AE #1597)
- Body Scissors (AE #1737)
- Reamer / Hole Punch (AE #1499)
- Shock Pliers (AE #1681)
- Green Slime shock lube (AE #1105)
- Calipers or a Precision Ruler
- Wire Cutters / Hobby Knife
- Needle Nose Pliers
- Soldering Iron

:: Hardware - 1:1 Scale View

Cap Head (shcs)

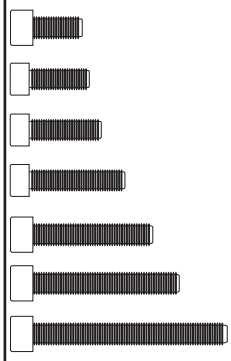

4-40x1/4"
4-40x5/16"
4-40x3/8"
4-40x1/2"
4-40x5/8" (6926)
4-40x3/4"
4-40x1"

Flat Head (fhcs)

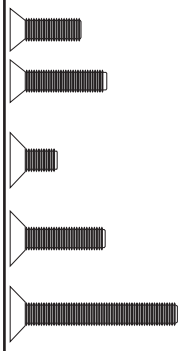

4-40x3/8"
4-40x1/2"
8-32x1/4" (6316)
8-32x1/2" (6316)
8-32x7/8" (6316)

Button Head (bhcs)

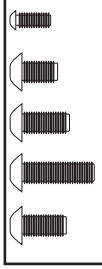

0-80x3/16"
4-40x3/16"
4-40x1/4"
4-40x3/8"
3x6mm (31531)

Diff Balls



1/8 Diff Balls

Bushings

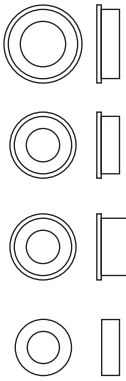

1/4 x 3/8 x 1/8 Flanged
3/16 x 5/16 x 1/8 Flanged
3/16 x 5/16 x 1/4 Flanged
3/16 x 3/8 x 1/8 Unflanged

Clips



E-clip 1/8" (6299)
Bowed E-Clip

Set Screws



4-40x1/8"
4-40x5/16"

Nuts (lock/plain)

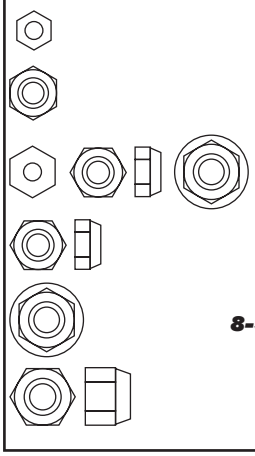

4-40 Small Pattern Plain Nut
4-40 Steel Locknut
4-40 Nuts
5-40 Diff Locknut
8-32 Nylon Nut, White
8-32 Steel Locknut

Shims and Washers

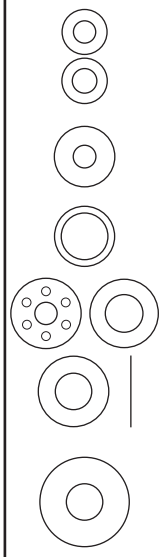

Dogbone spacer
.030 Nylon Spacer (4187)
#4 Washer
1/4" Axle Shim
Diff Thrust Washers
5mm x 9.5mm 0.17mm
#8 Aluminum Thick Washer

Notes:

:: Table of Contents

1..... Cover

2..... Introduction

3.....1:1 Hardware “Fold Out”

4..... Table of Contents

5.....Nose Plate / Steering Build
(Bag A)

5 - 6..... Front Suspension Build
(Bag B)

7 - 10.....Transmission Build
(Bag C)

10 - 11.....Rear Bulkhead Build
(Bag D)

11 - 12.....Rear Suspension Build
(Bag E)

12 - 13.....Turnbuckles Build
(Bag F)

13 - 15.....Shocks Build
(Bag G)

16 .....Chassis Build
(Bag H)

16 - 18.....Electronics Build
(Bag I)

18 - 21..... Wheels, Tires and Body Install
(Bag J)

21.....Notes

22..... Decal Installation

:: Notes

This symbols indicates a special note or instruction in the manual.



There is a 1:1 hardware foldout page in the front of the manual. To check the size of a part, line up your hardare with the correct drawing until you find the exact size.

Associated Electrics, Inc.
21062 Bake Parkway
Lake Forest, CA 92630

ASSOCIATED ELECTRICS Since 1984

Customer Service
Tel: 949.544.7500
Fax: 949.544.7501

http://www.AssociatedElectrics.com • • http://www.instagram.com/teamassociatedrc/ • http://www.facebook.com/TeamAssociated/

:: Nose Plate / Steering Build - Bag A - Step 1

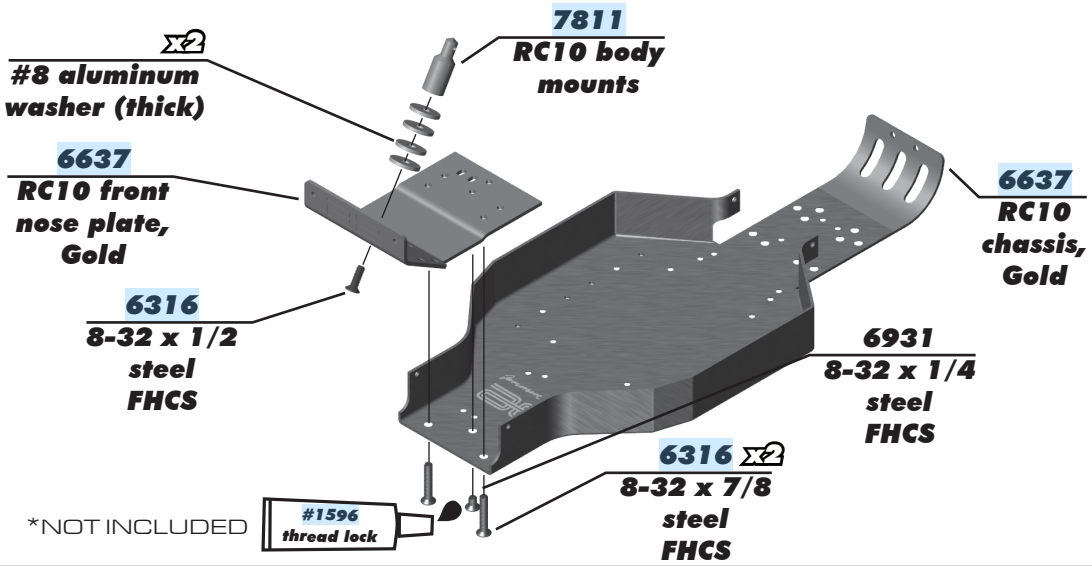

:: Nose Plate / Steering Build - Bag A - Step 2

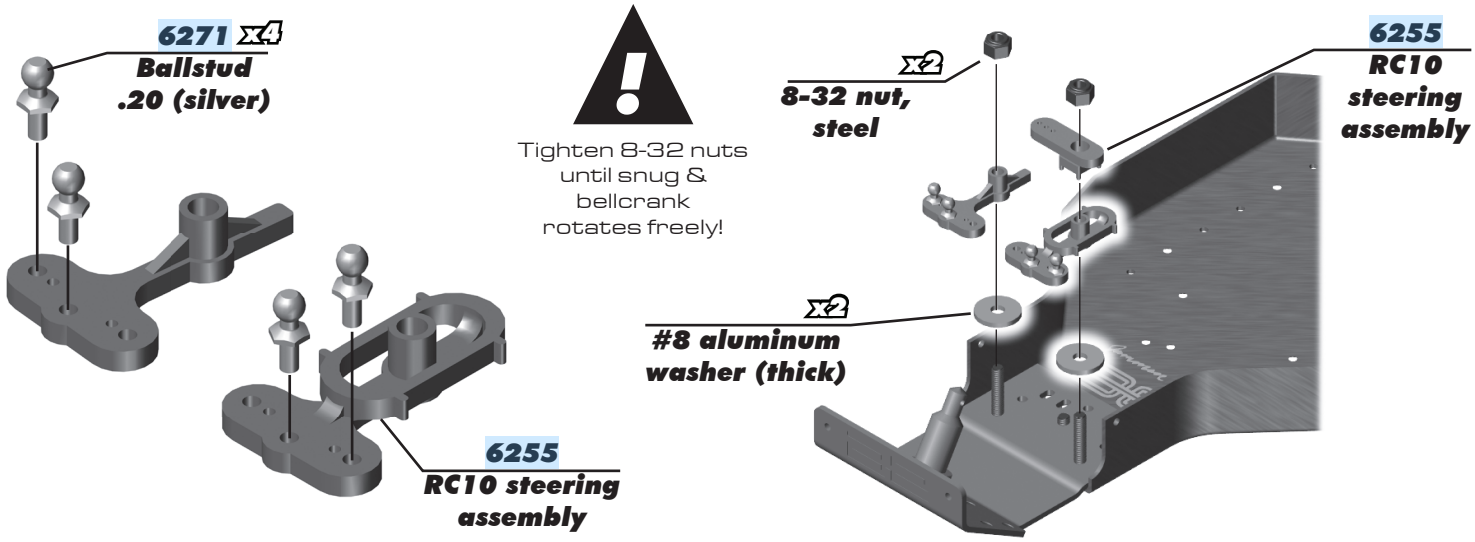

:: Front Suspension Build - Bag B - Step 1

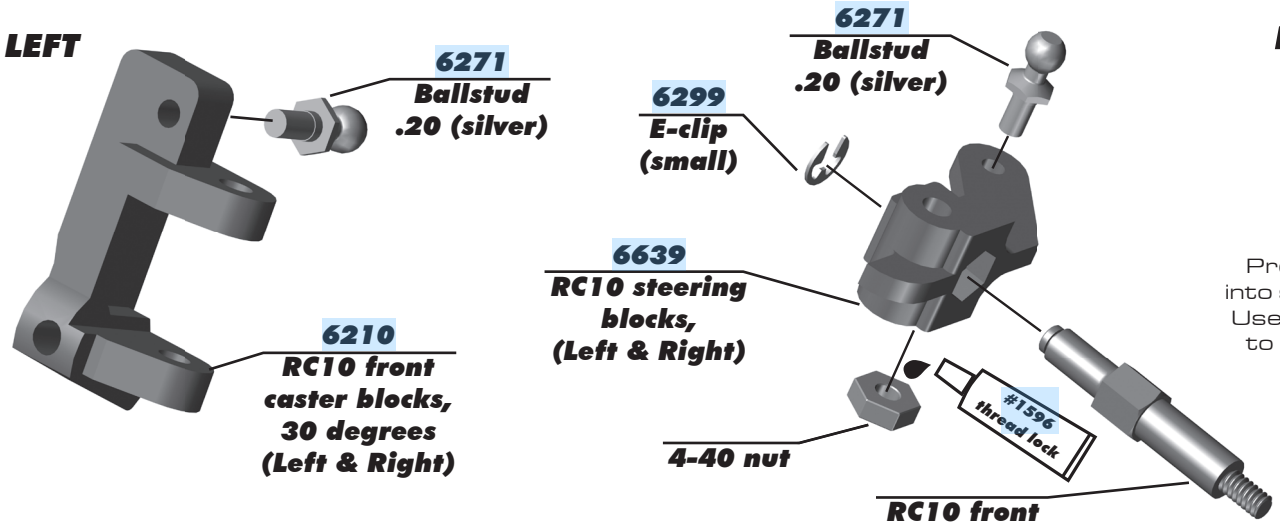

:: Front Suspension Build - Bag B - Step 2

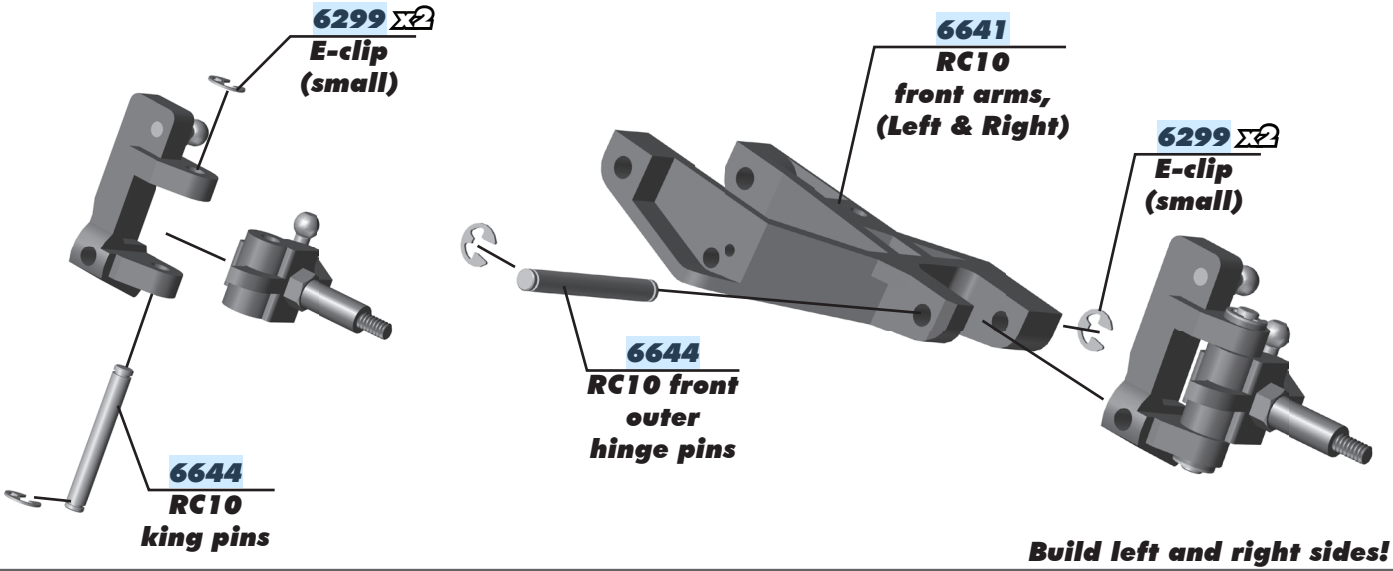

Build left and right sides!

:: Front Suspension Build - Bag B - Step 3

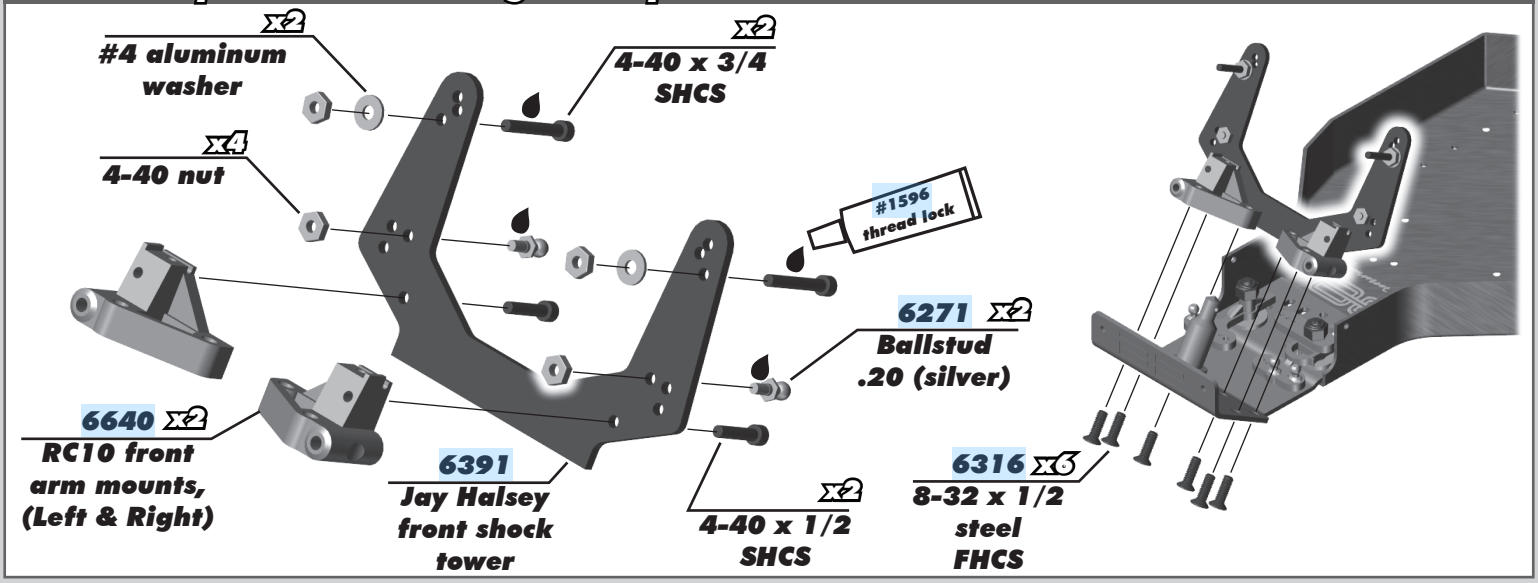

:: Front Suspension Build - Bag B - Step 4

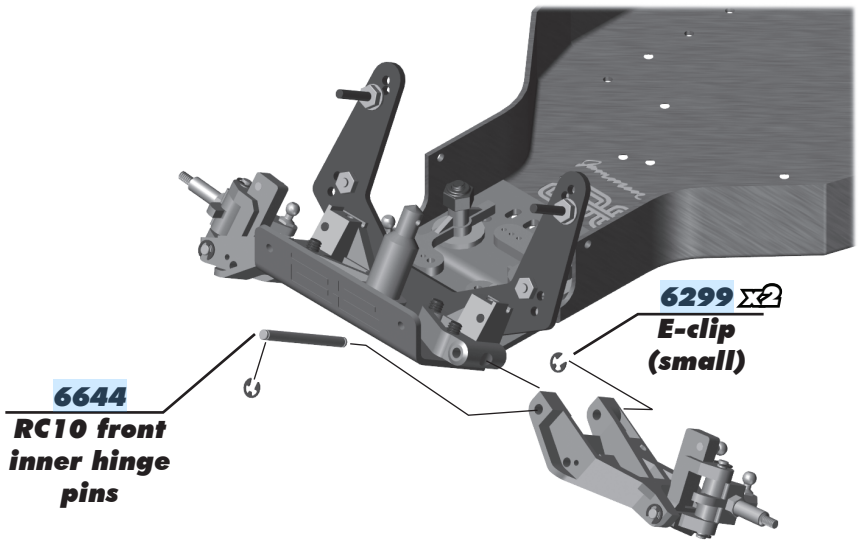

Build left and right sides!

:: Transmission Build - Bag C - Step 1

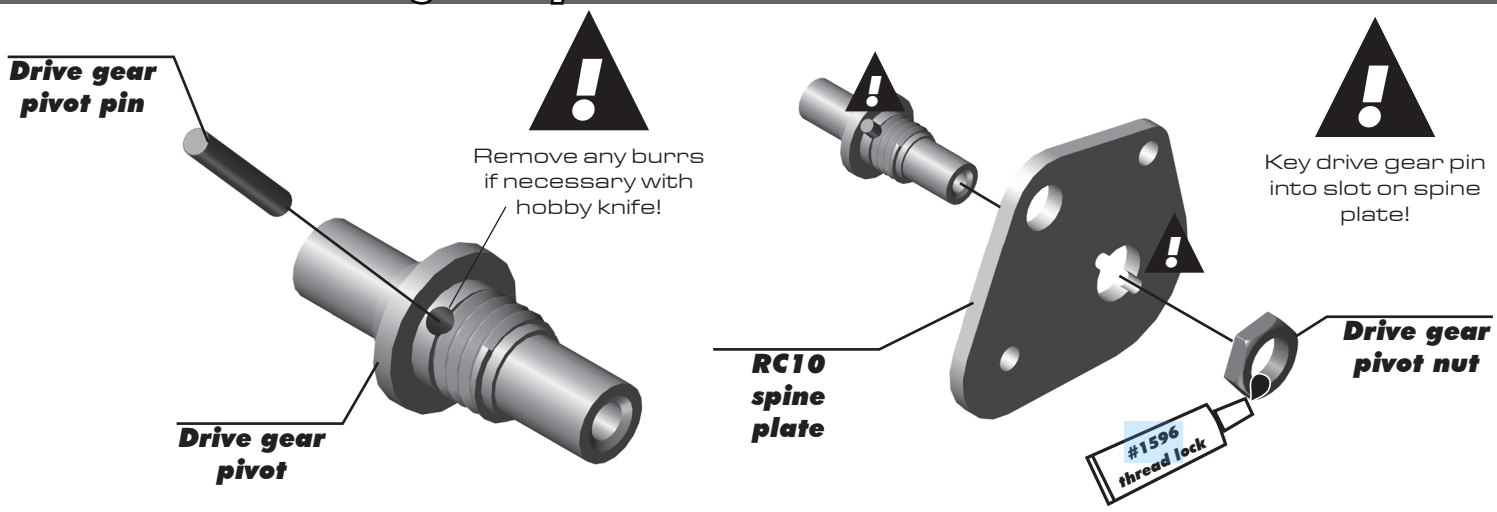

:: Transmission Build - Bag C - Step 2

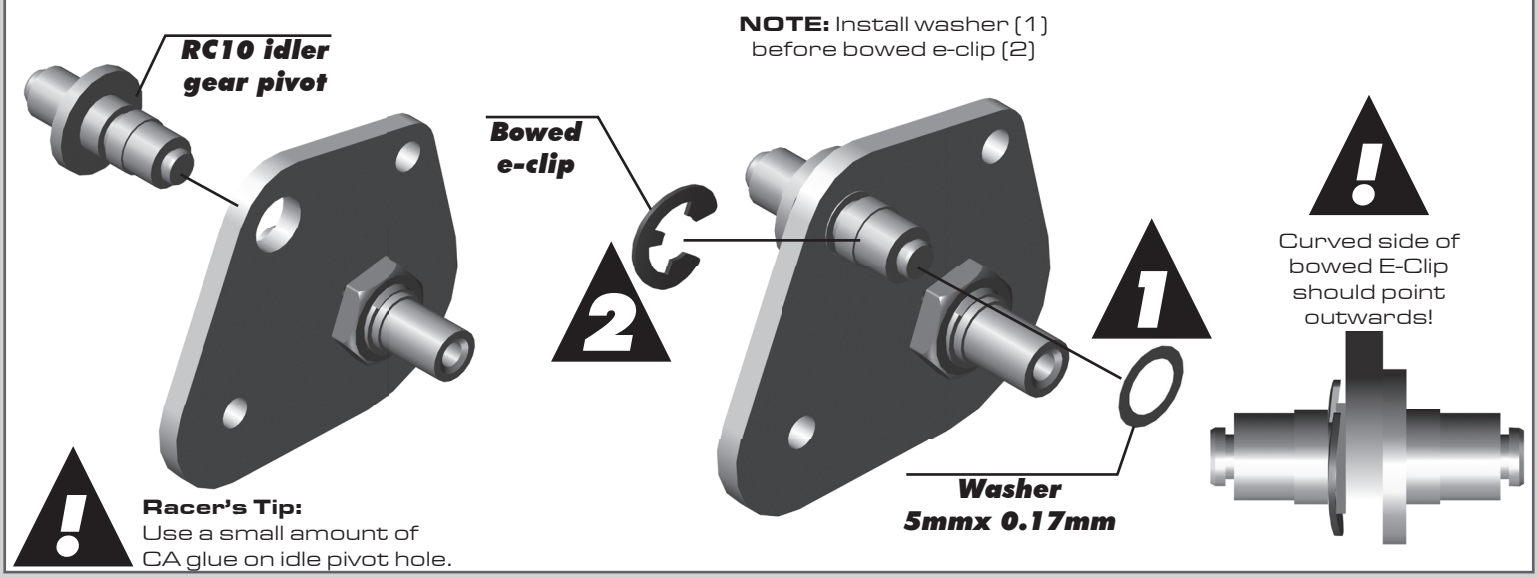

:: Transmission Build - Bag C - Step 3

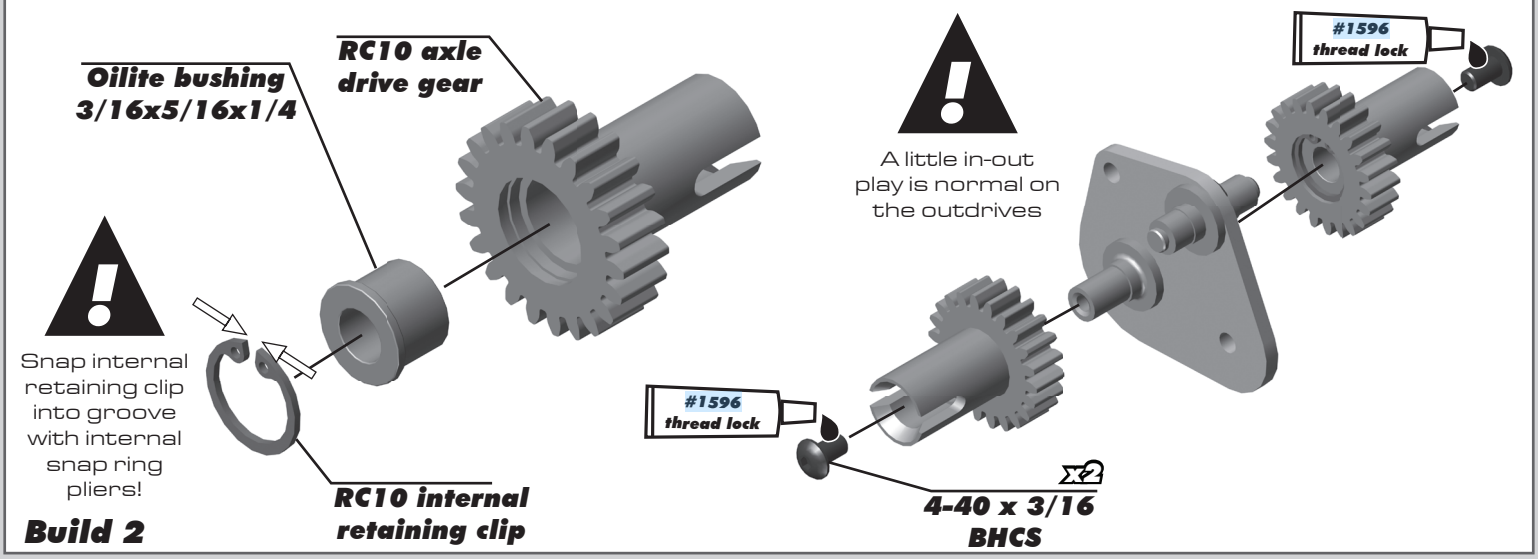

:: Transmission Build - Bag C - Step 4

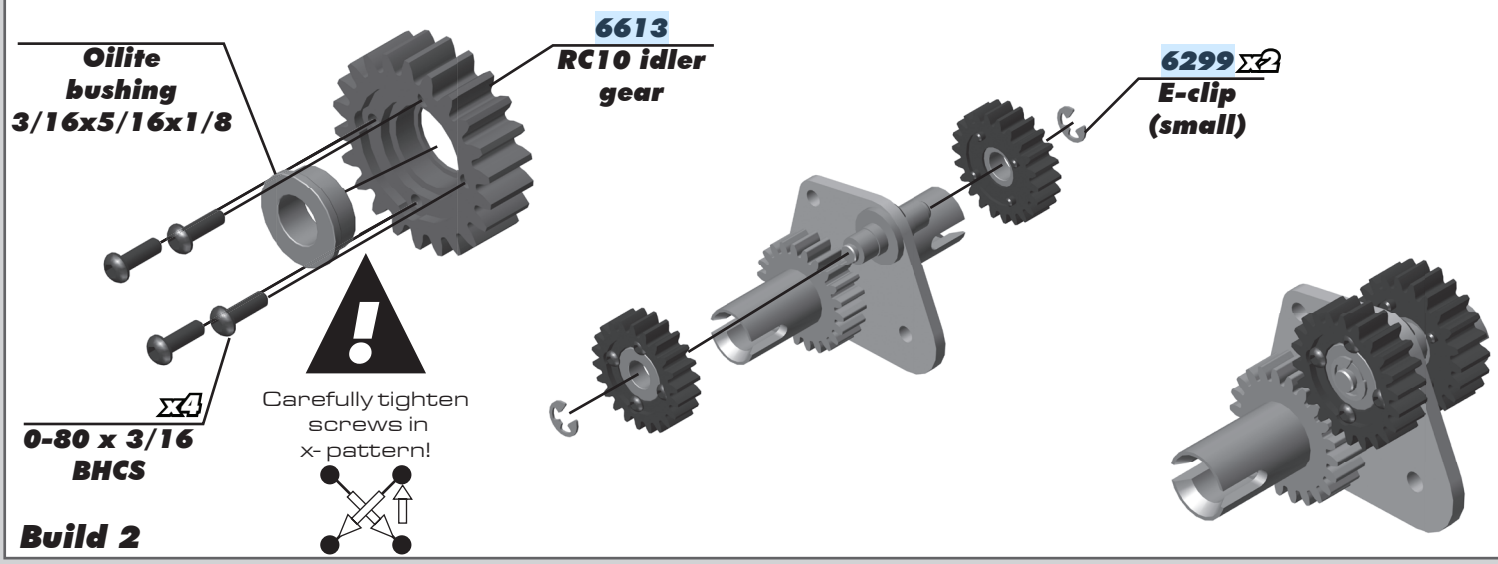

:: Transmission Build - Bag C - Step 5

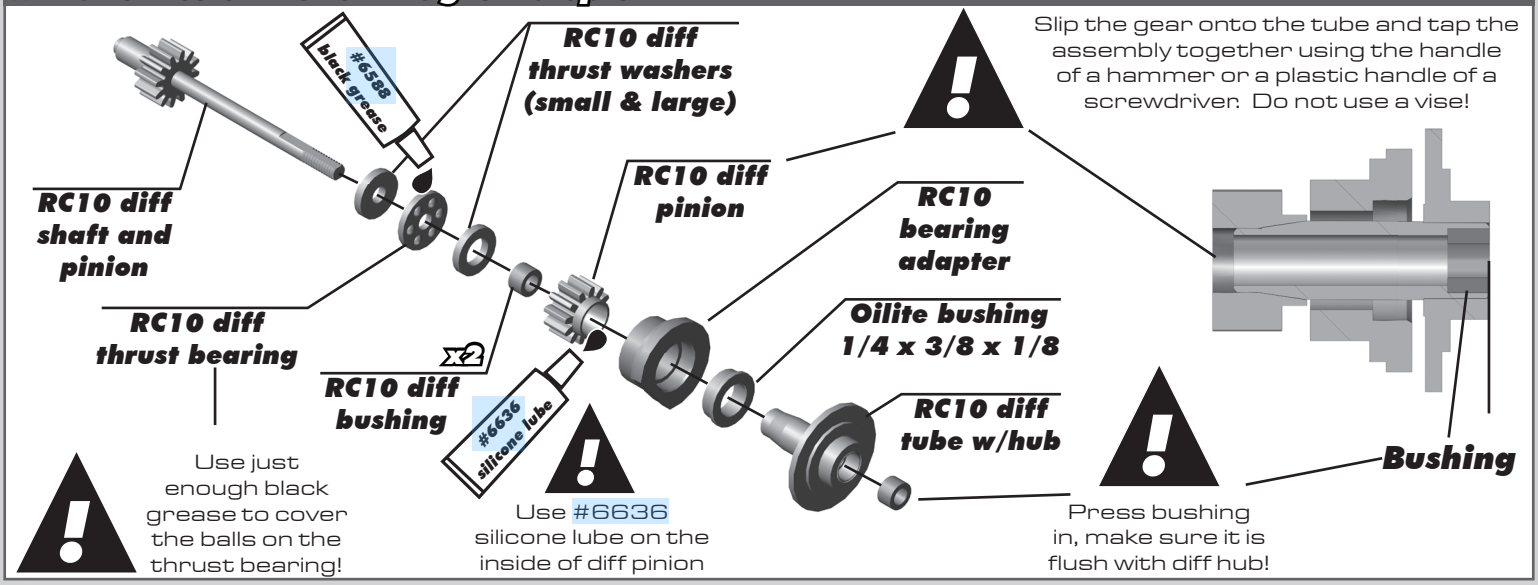

:: Transmission Build - Bag C - Step 6

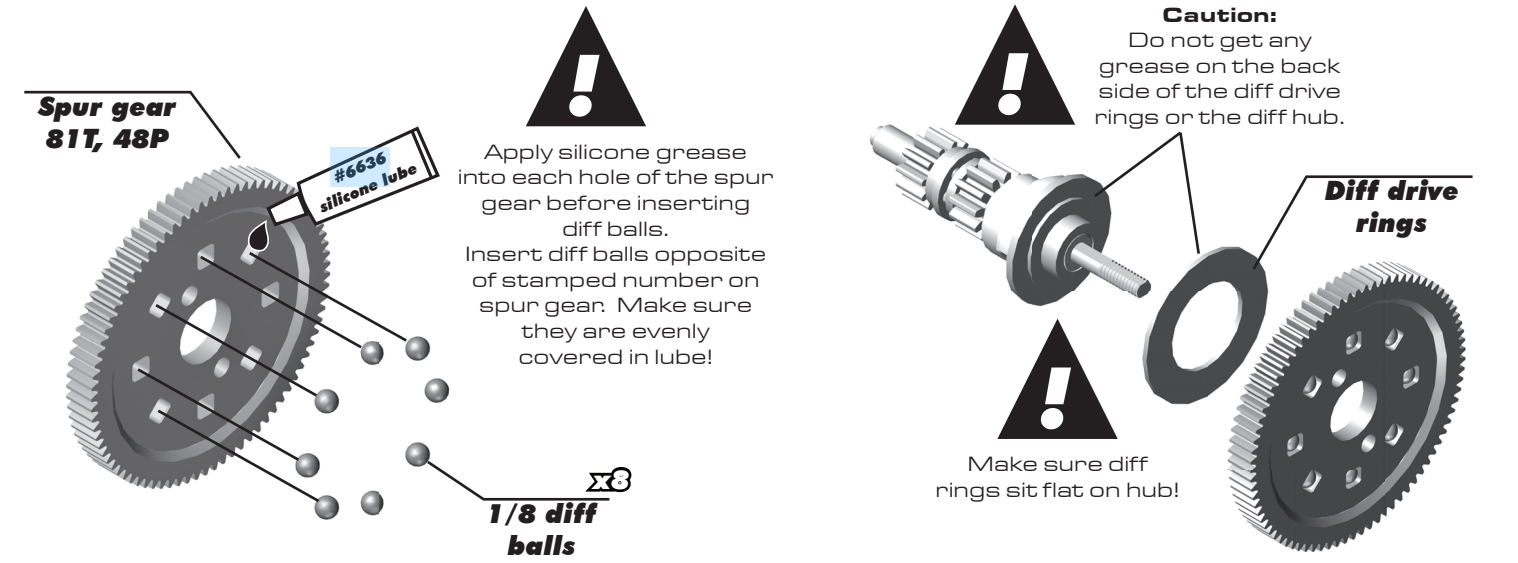

:: Transmission Build - Bag C - Step 7

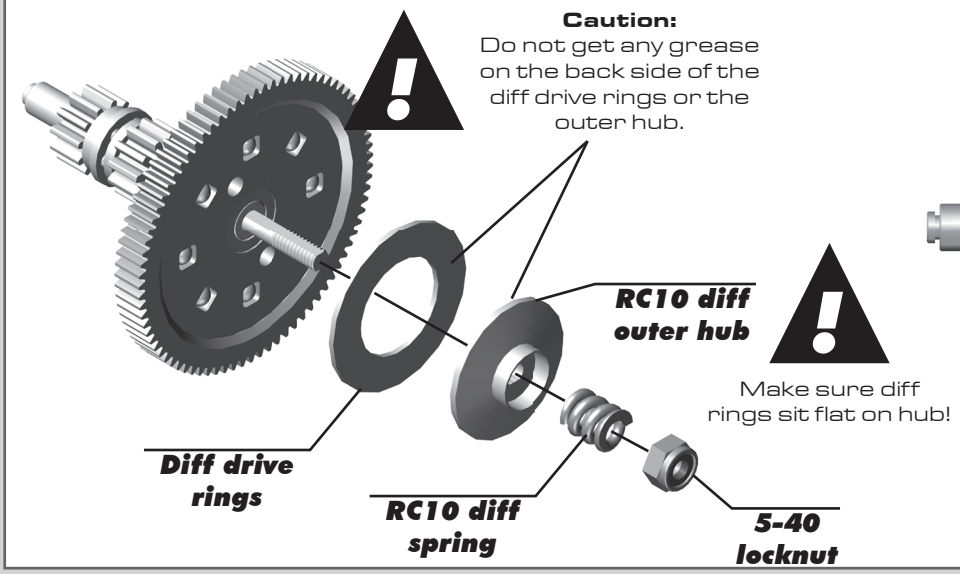

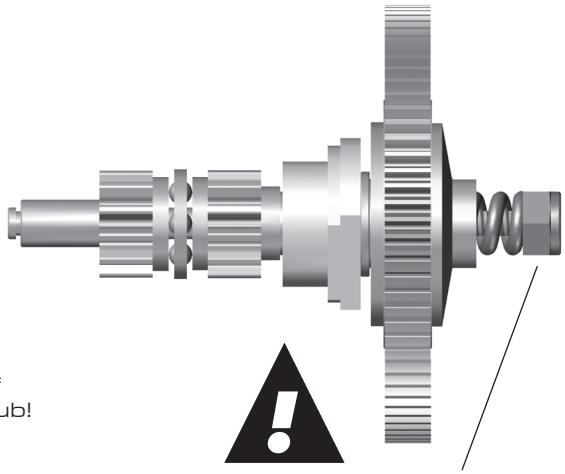

:: Transmission Build - Bag C - Step 8

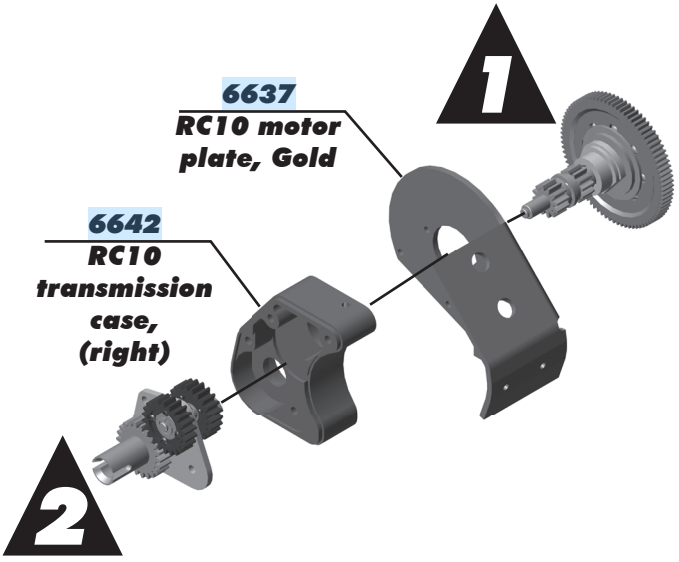

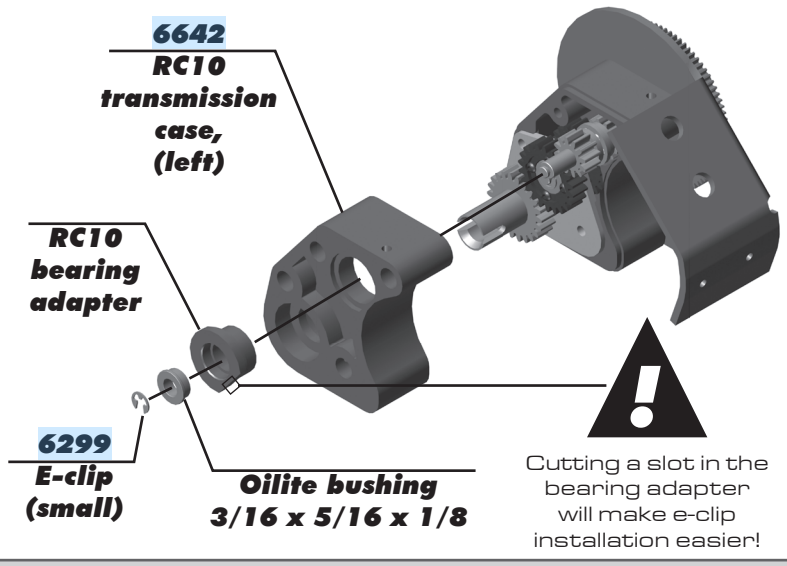

:: Transmission Build - Bag C - Step 9

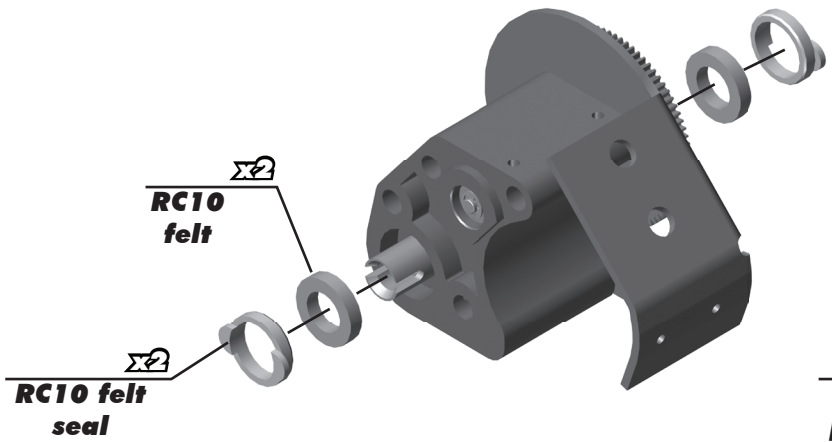

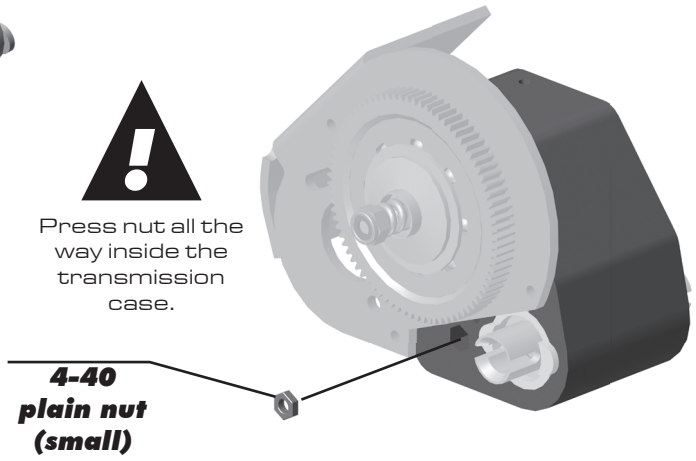

:: Transmission Build - Bag C - Step 10

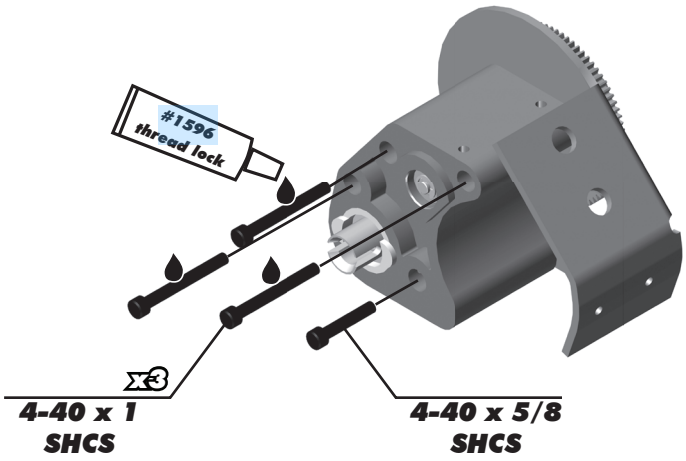

:: Rear Bulkhead Build - Bag D - Step 1

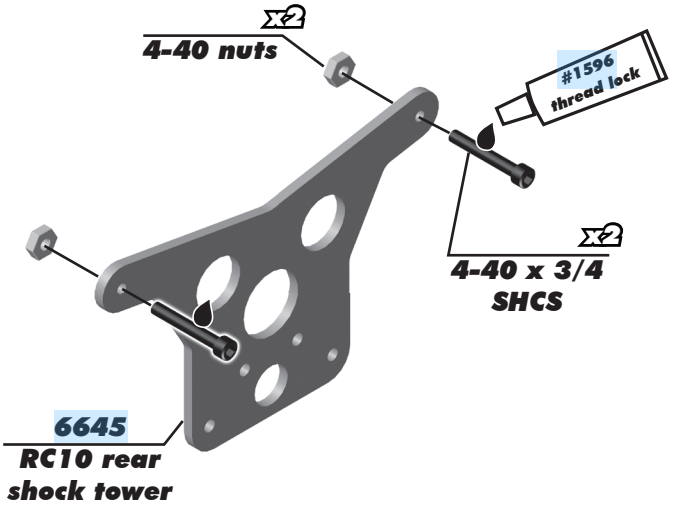

:: Rear Bulkhead Build - Bag D - Step 2

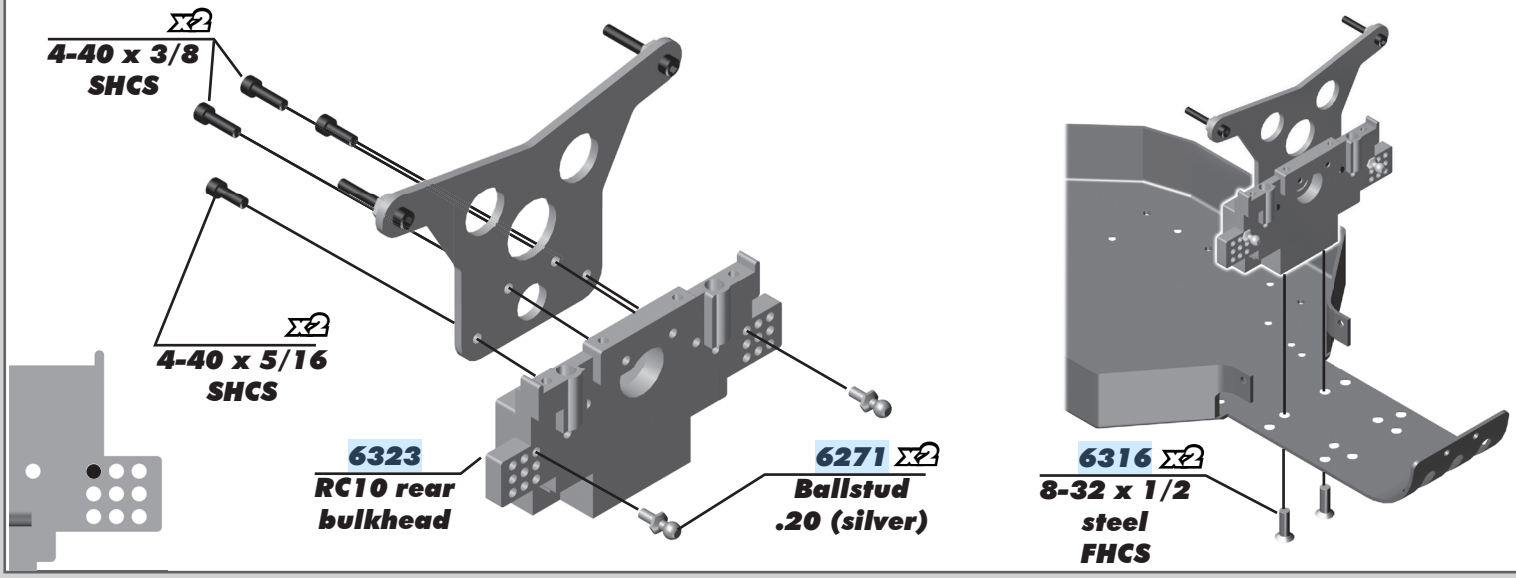

:: Rear Bulkhead Build - Bag D - Step 3

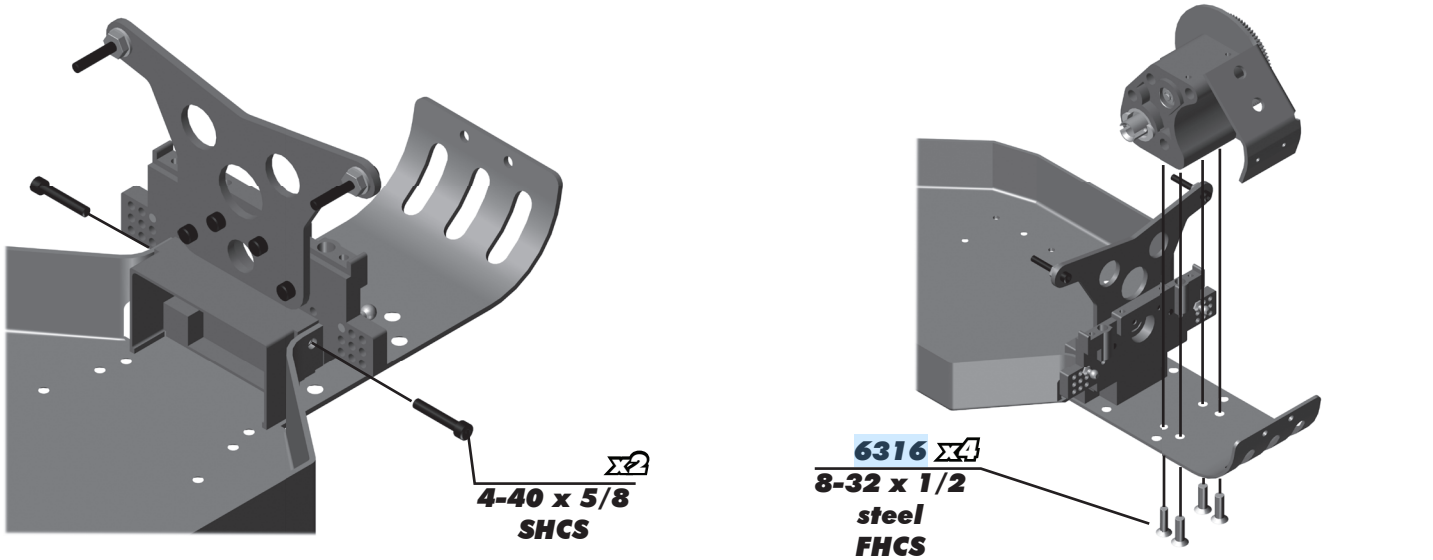

:: Rear Bulkhead Build - Bag D - Step 4

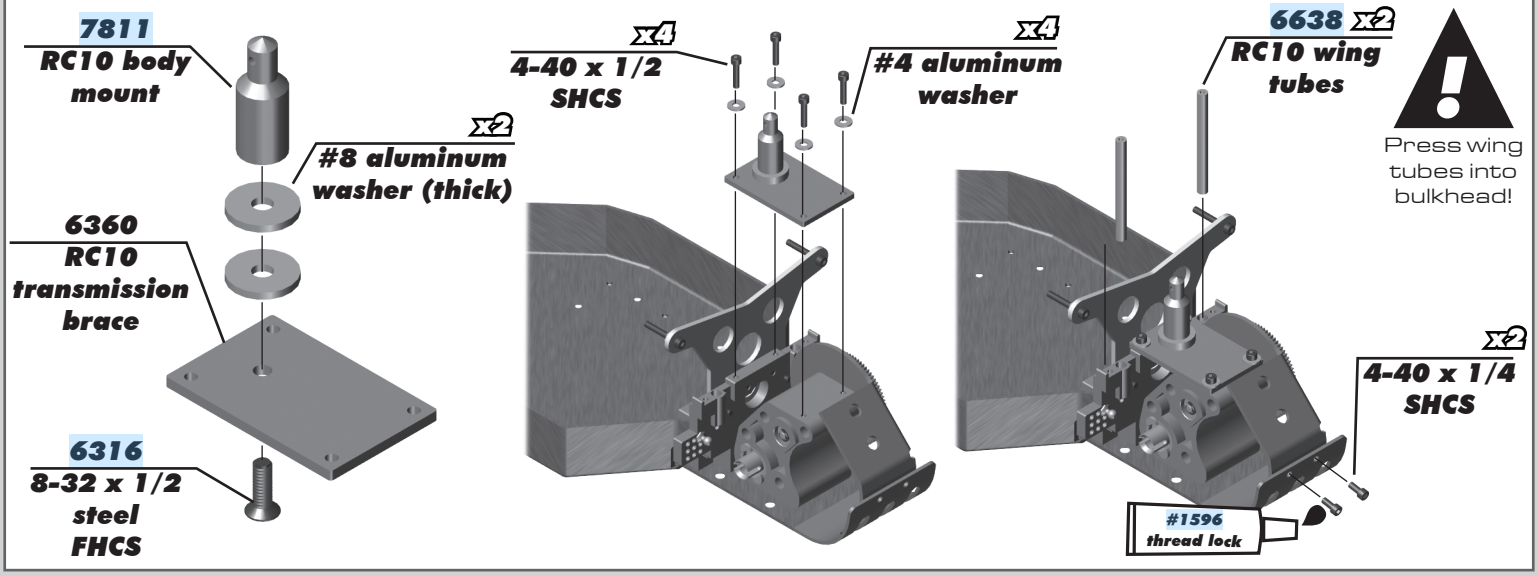

:: Rear Suspension Build - Bag E - Step 1

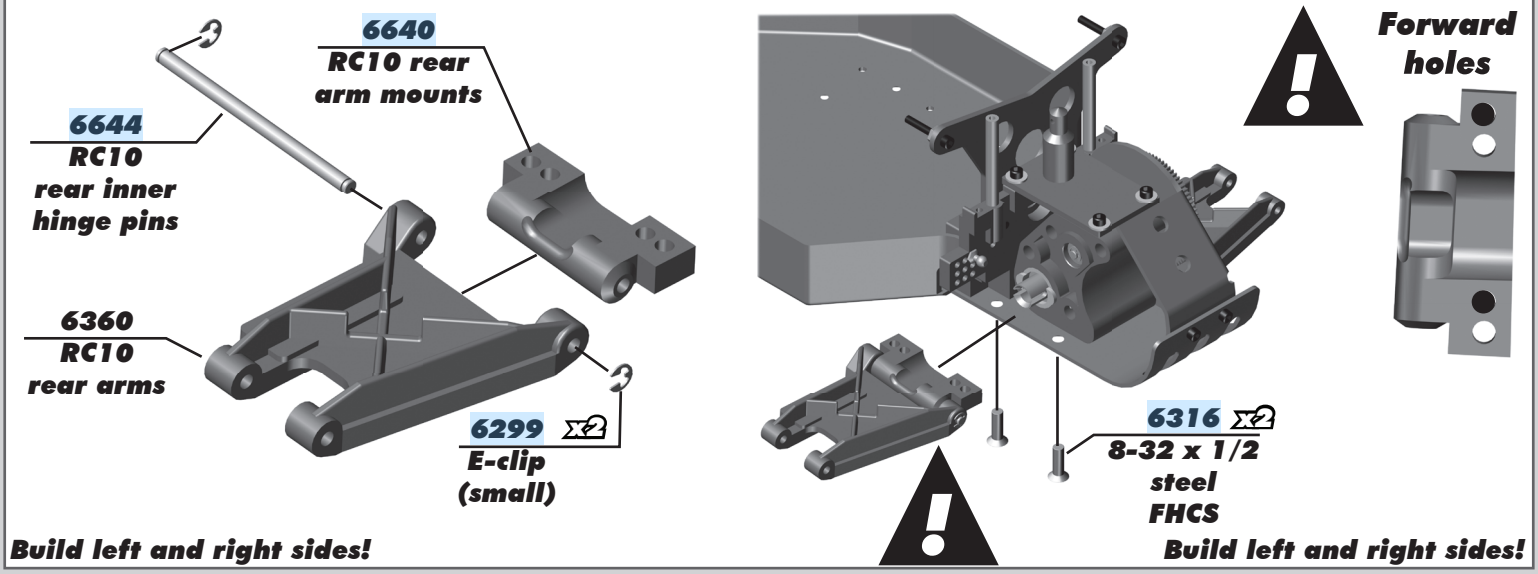

:: Rear Suspension Build - Bag E - Step 2

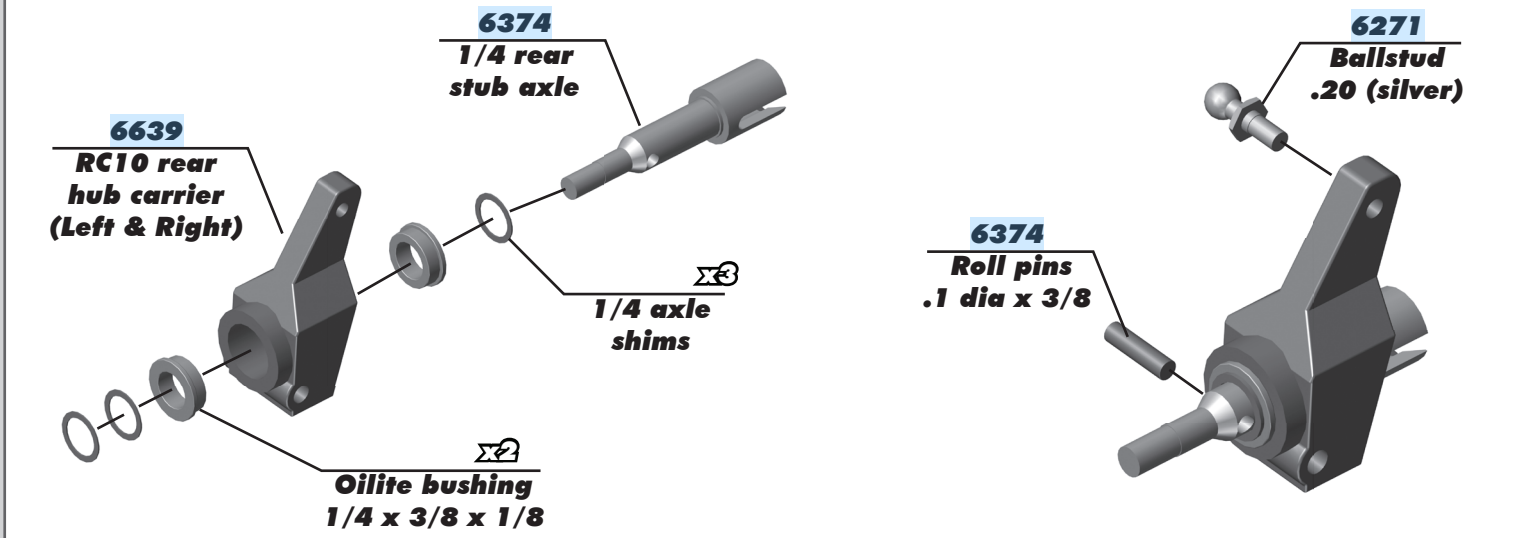

:: Rear Suspension Build - Bag E - Step 3

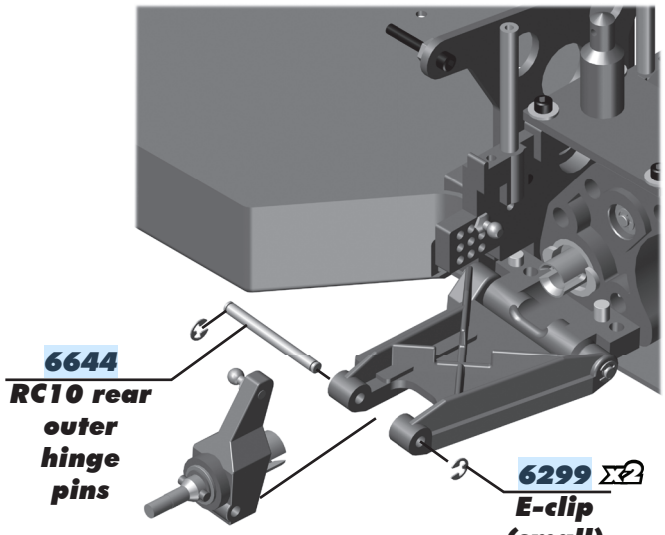

Build left and right sides!

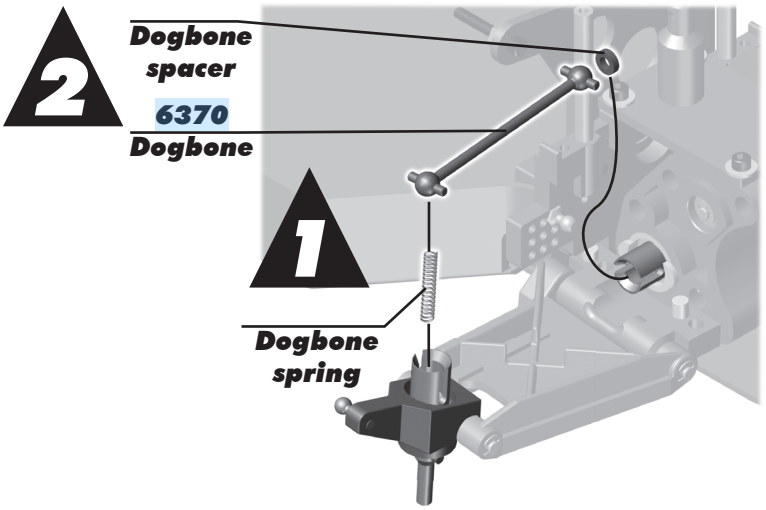

Build left and right sides!

:: Turnbuckles Build - Bag F - Step 1

Use a pair of pliers or wire cutters to carefully hold the turnbuckle while threading on ball cups.

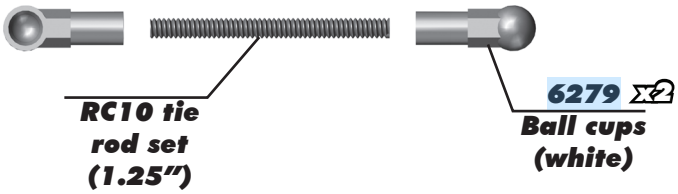

Rear Camber Turnbuckle
0.56" (14.20mm)

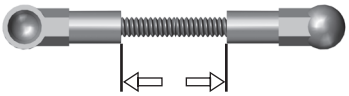

Build left and right sides!

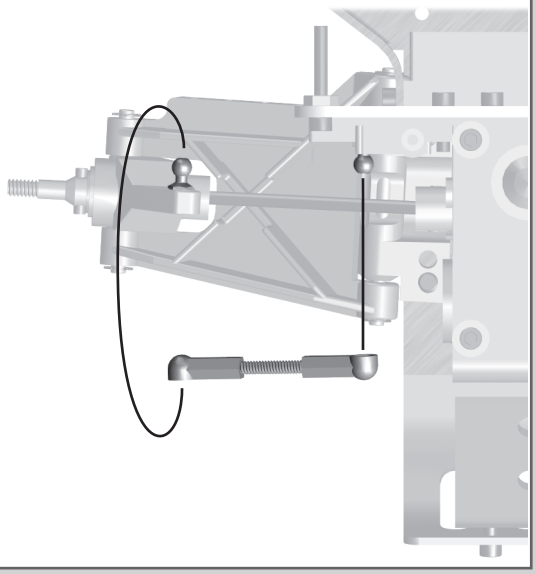

:: Turnbuckles Build - Bag F - Step 2

Use a pair of pliers or wire cutters to carefully hold the turnbuckle while threading on ball cups.

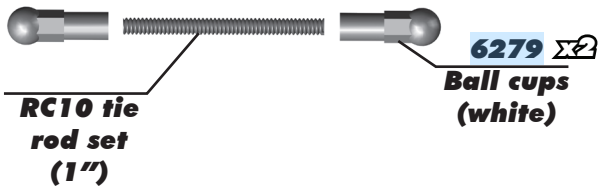

Steering Rack Turnbuckle
0.49" (12.44mm)

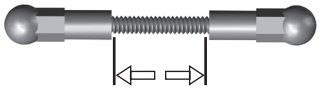

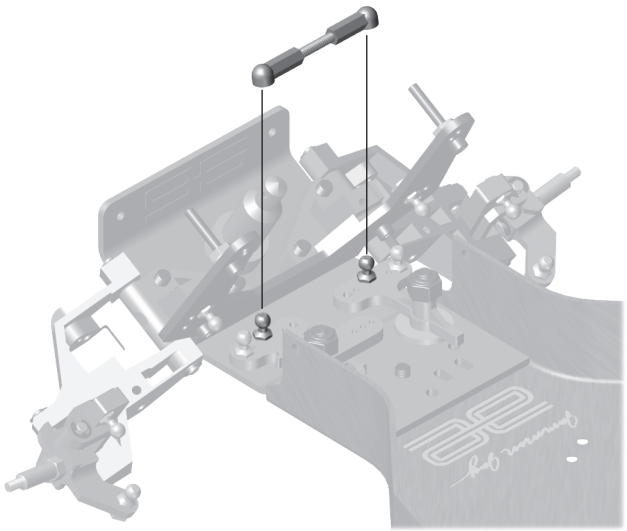

:: Turnbuckles Build - Bag F - Step 3

Use a pair of pliers or wire cutters to carefully hold the turnbuckle while threading on ball cups.



Front Camber Turnbuckle 0.53" (13.5mm)

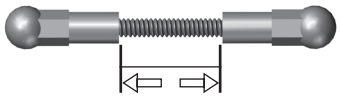

Build left and right sides!

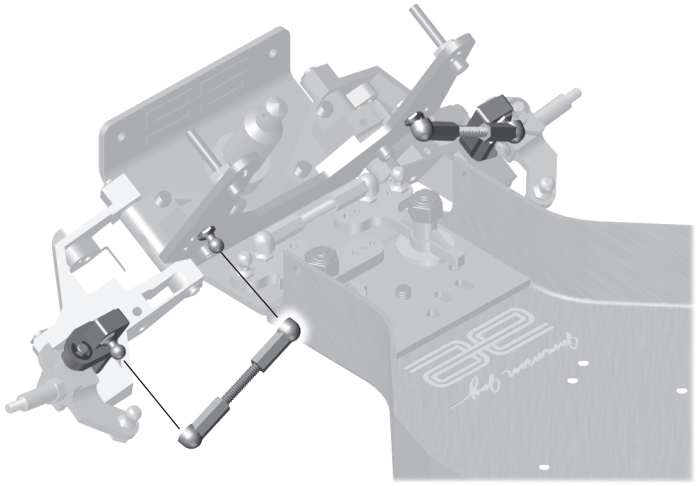

:: Turnbuckles Build - Bag F - Step 4

Use a pair of pliers or wire cutters to carefully hold the turnbuckle while threading on ball cups.

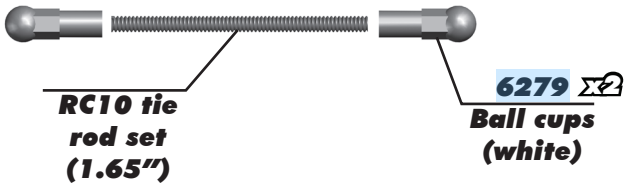

Steering Turnbuckle 1.09" (27.70mm)



Build left and right sides!

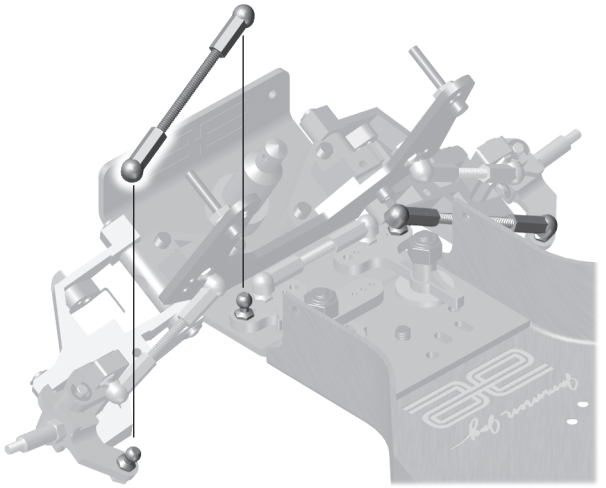

:: Shocks Build - Bag G - Step 1

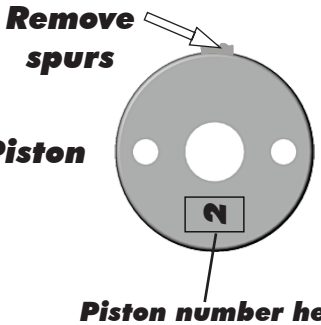

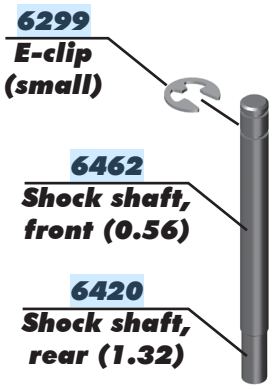

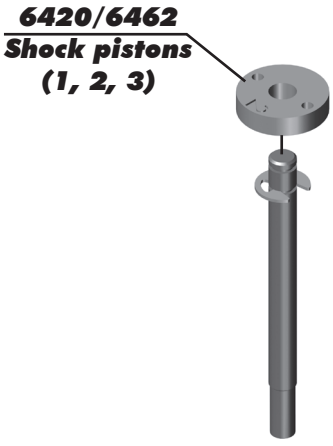

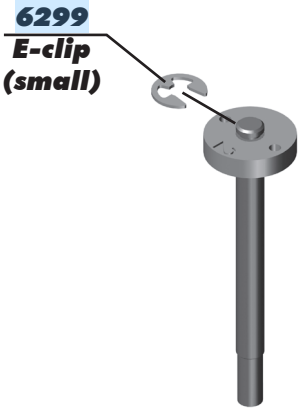

TIP: Use marker to mark the piston numbers for easy identification!

Build two front and two rear!

:: Shocks Build - Bag G - Step 2

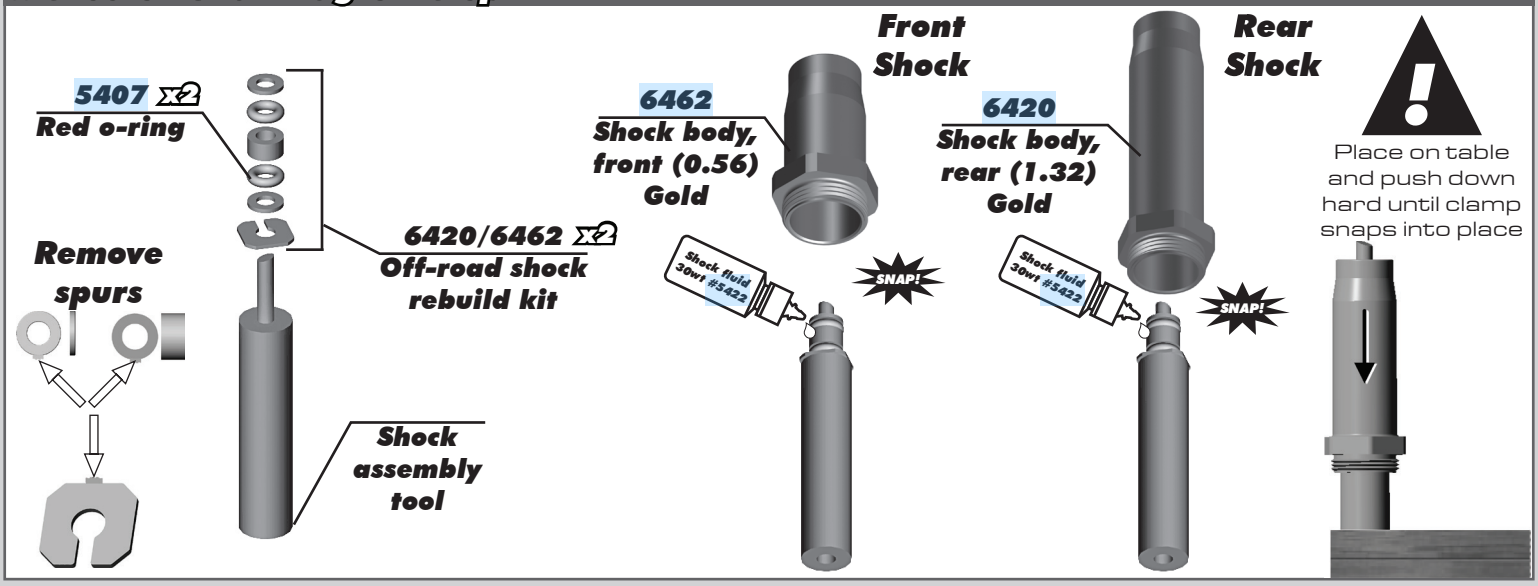

:: Shocks Build - Bag G - Step 3

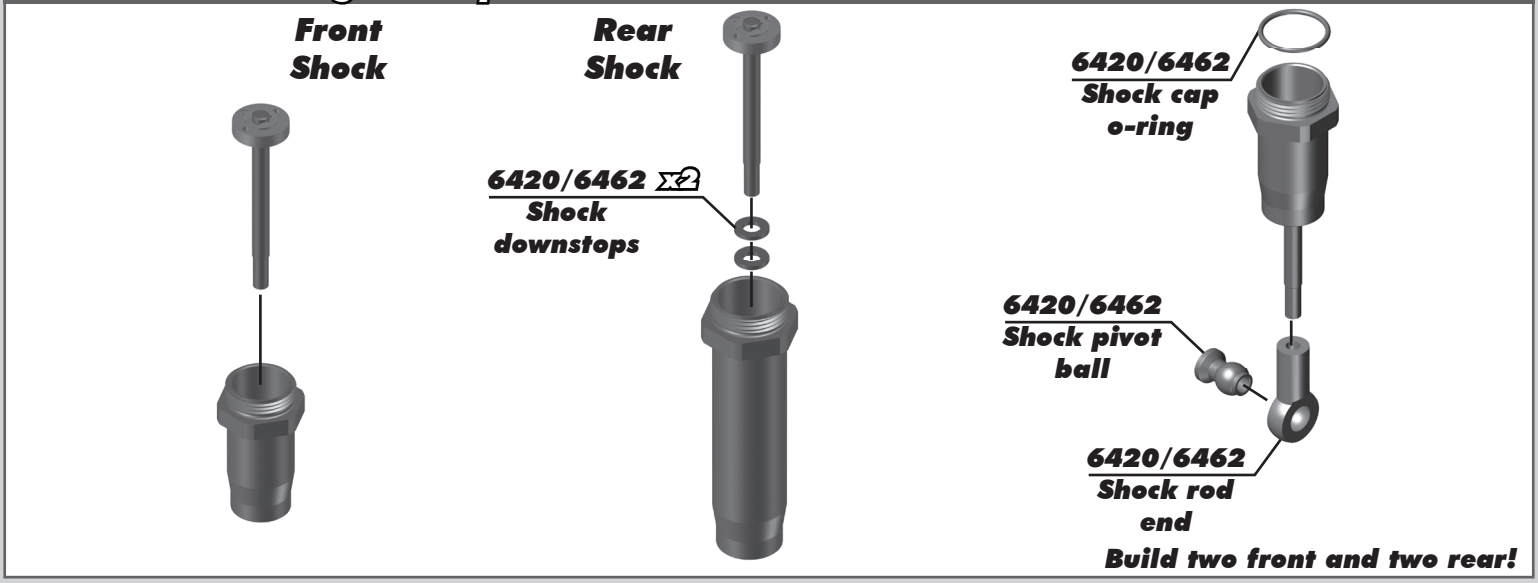

:: Shocks Build - Bag G - Step 4

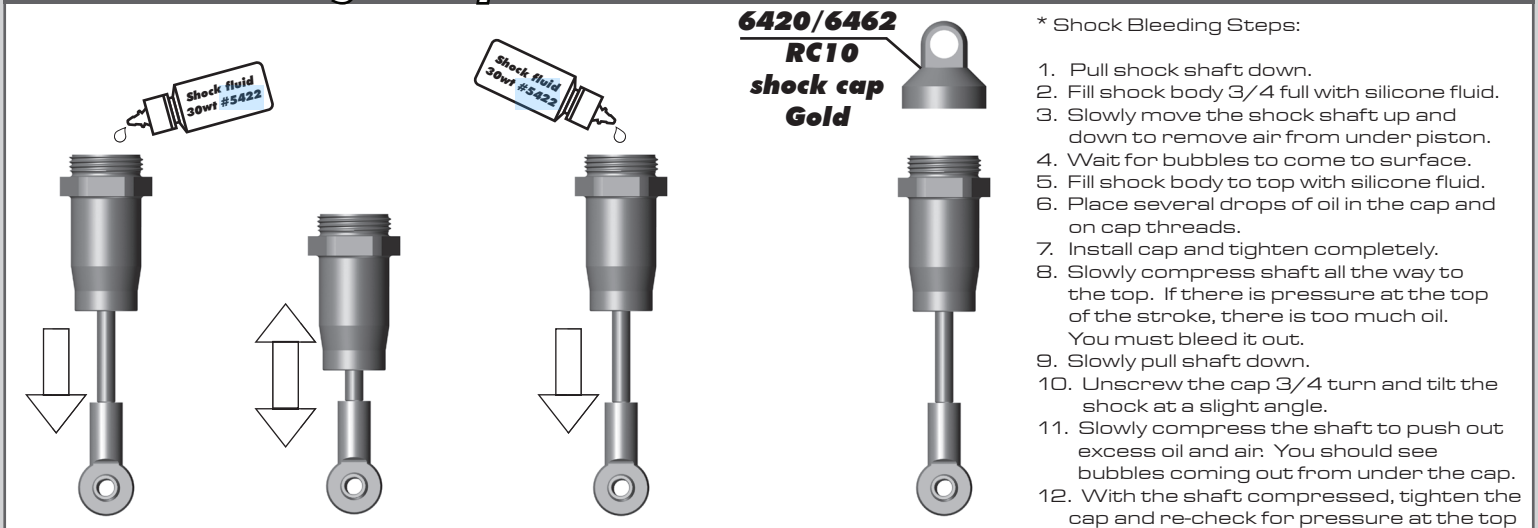

* Shock Bleeding Steps:

1. Pull shock shaft down.
2. Fill shock body 3/4 full with silicone fluid.
3. Slowly move the shock shaft up and down to remove air from under piston.
4. Wait for bubbles to come to surface.
5. Fill shock body to top with silicone fluid.
6. Place several drops of oil in the cap and on cap threads.
7. Install cap and tighten completely.
8. Slowly compress shaft all the way to the top. If there is pressure at the top of the stroke, there is too much oil. You must bleed it out.
9. Slowly pull shaft down.
10. Unscrew the cap 3/4 turn and tilt the shock at a slight angle.
11. Slowly compress the shaft to push out excess oil and air. You should see bubbles coming out from under the cap.
12. With the shaft compressed, tighten the cap and re-check for pressure at the top of the stroke. If there is still pressure, repeat steps 9 thru 11.

:: Shocks Build - Bag G - Step 5



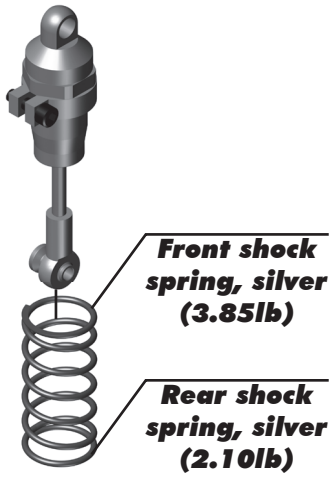



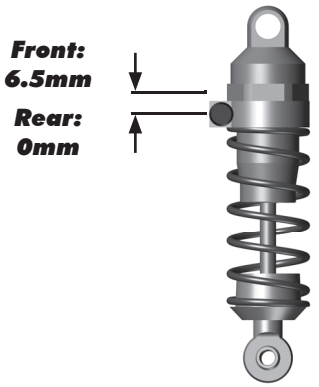

Build two front and two rear!

:: Shocks Build - Bag G - Step 6

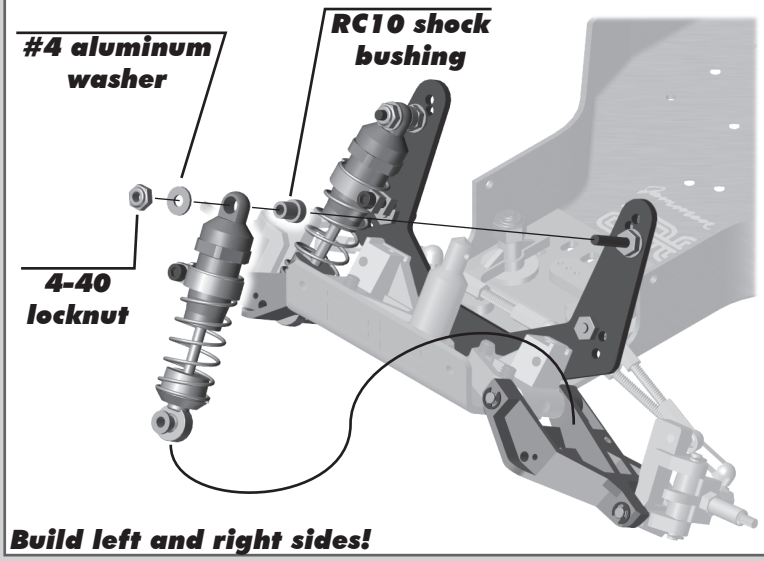

Build left and right sides!

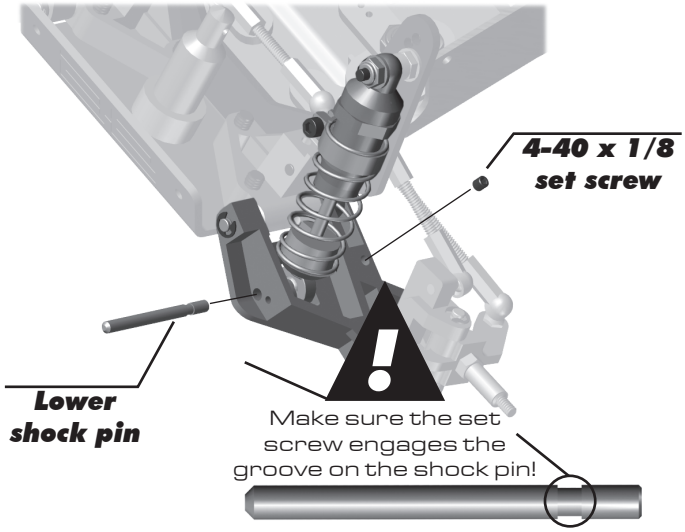

Build left and right sides!

:: Shocks Build - Bag G - Step 7

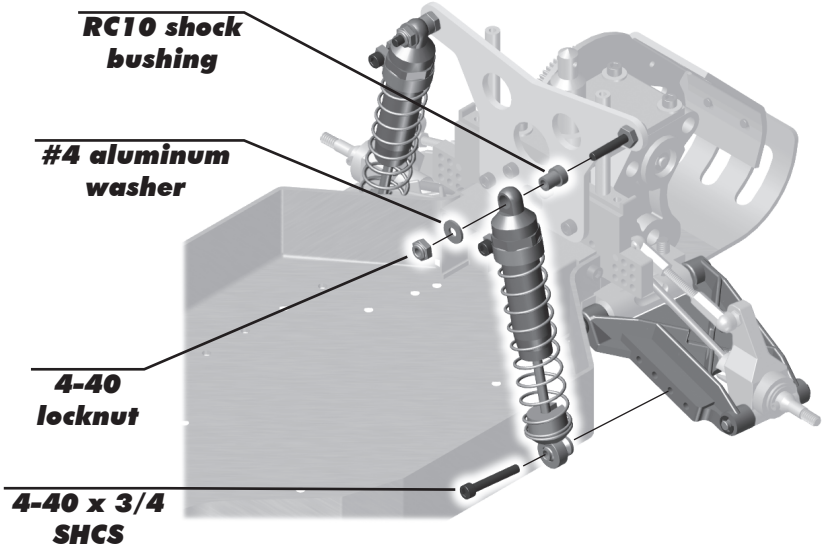

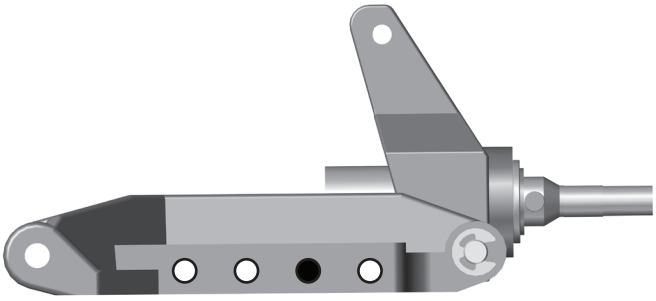

Build left and right sides!

:: Chassis Build - Bag H - Step 1

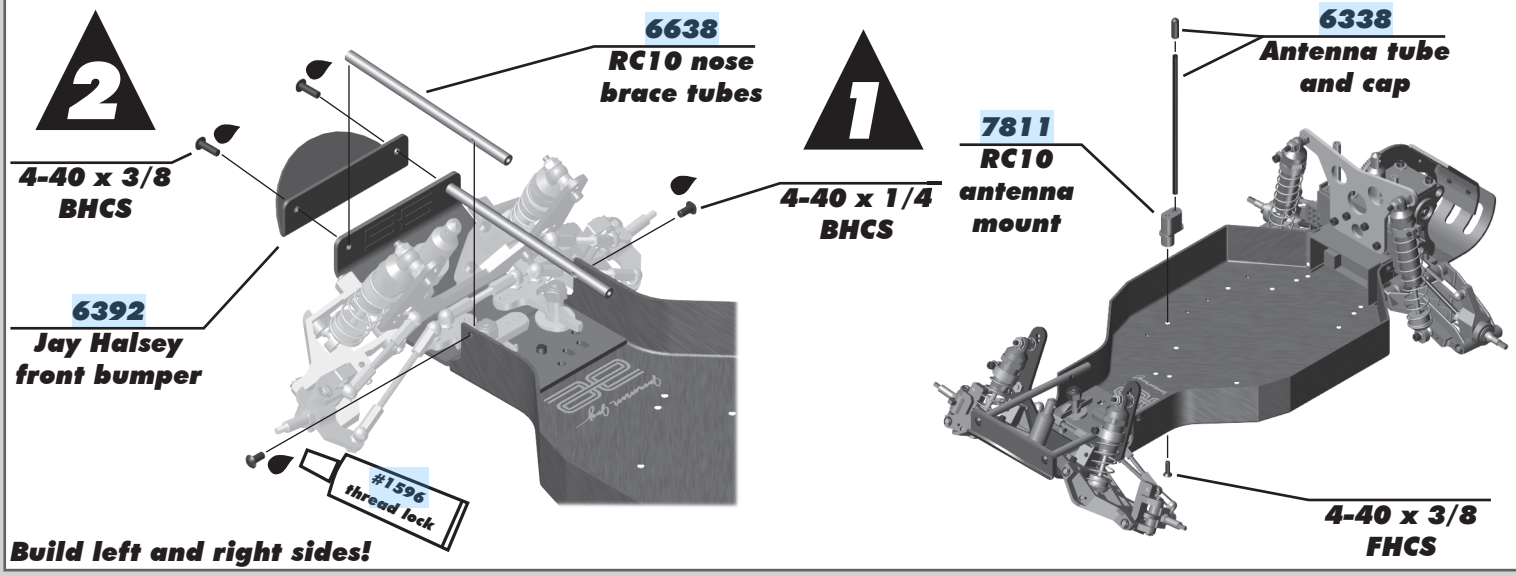

:: Electronics Build - Bag I - Step 1

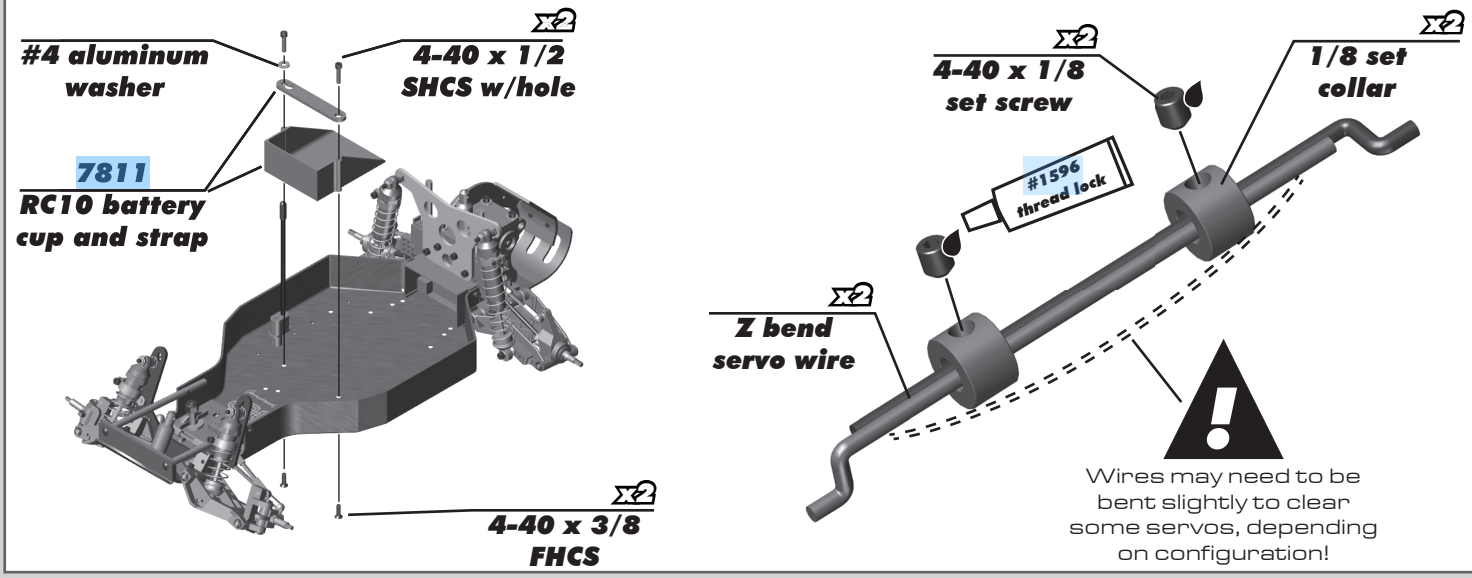

:: Electronics Build - Bag I - Step 2

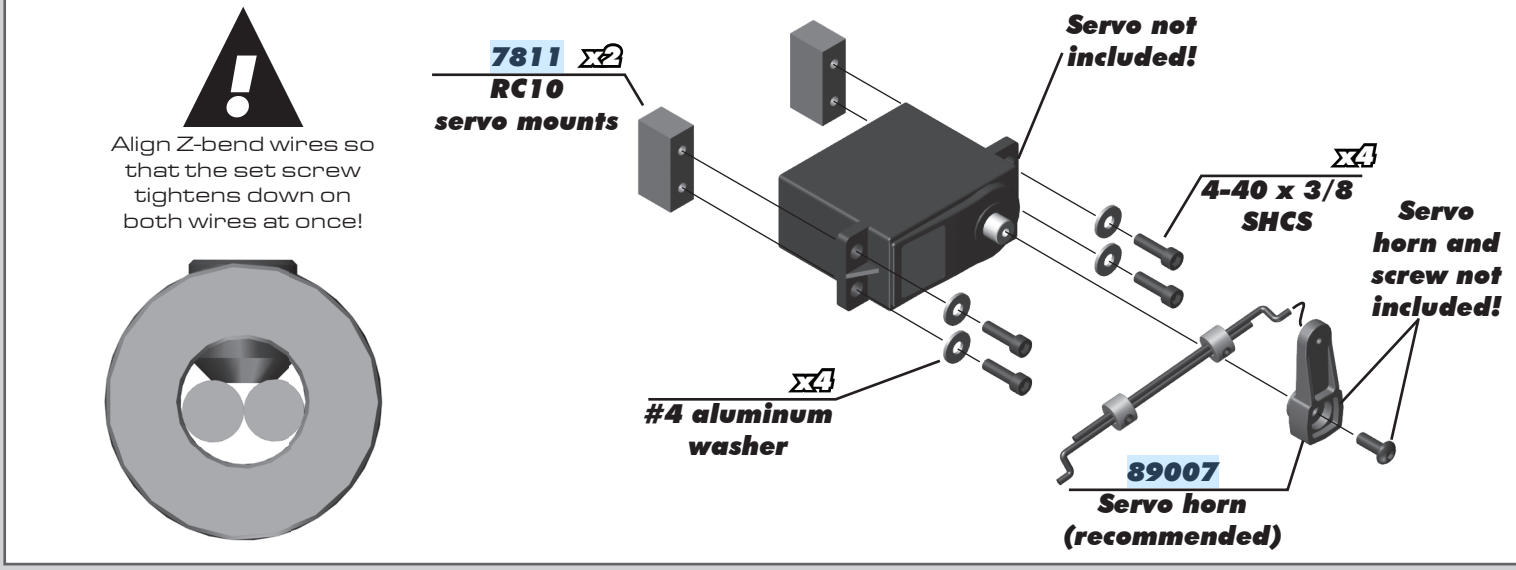

:: Electronics Build - Bag I - Step 3

Follow steps below to properly install Z bend wire into servo horn and steering link.

NOTE: Hole choice may vary depending on servo and servo horn used.



1) Press down on the Z bend wire....

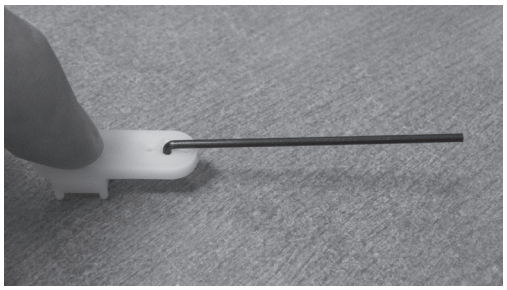

2) Rotate the wire so the Z bend wire is fully installed into steering link as shown.

TIP: Chamfering the top of the hole slightly will help to press in Z bend wire.

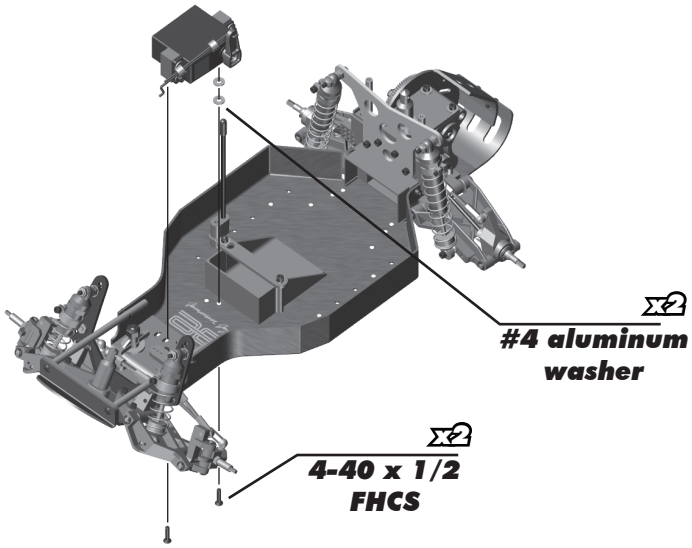

:: Electronics Build - Bag I - Step 4

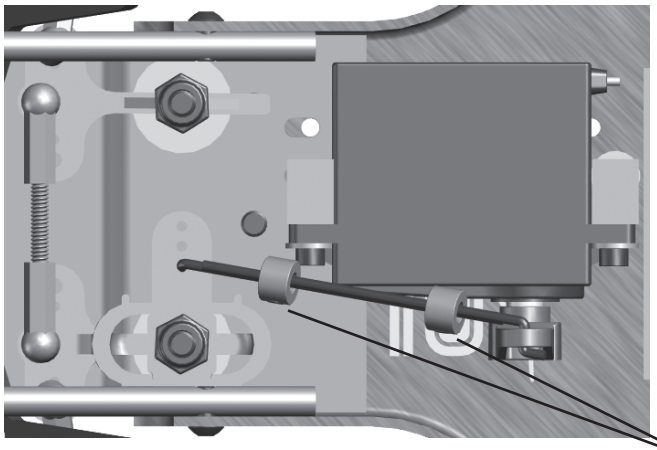

Install Z bend servo wire into steering bellcrank as shown. Ensure that full steering throw can be achieved with your servo horn setup!

Space collars as wide as possible while still clamping both wires.

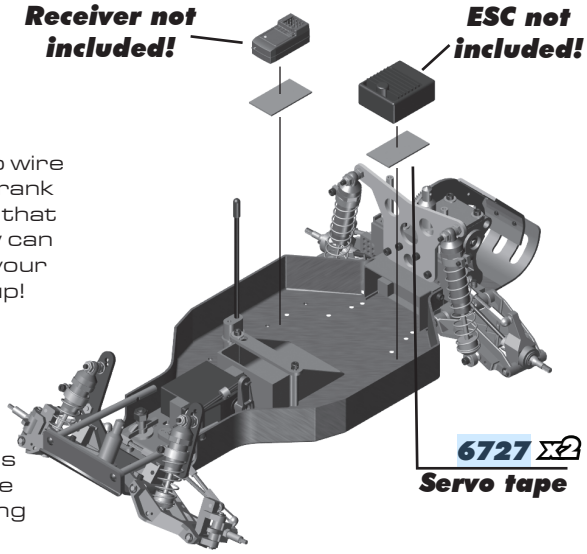

:: Electronics Build - Bag I - Step 5

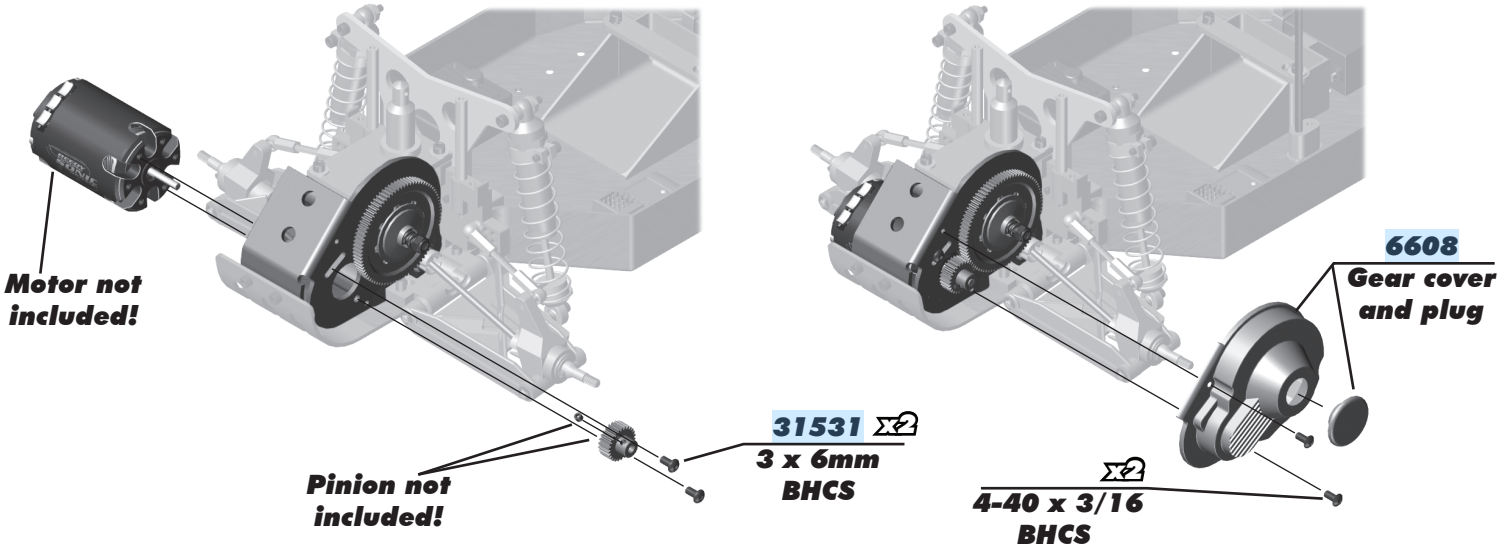

:: Electronics Build - Bag I - Step 6

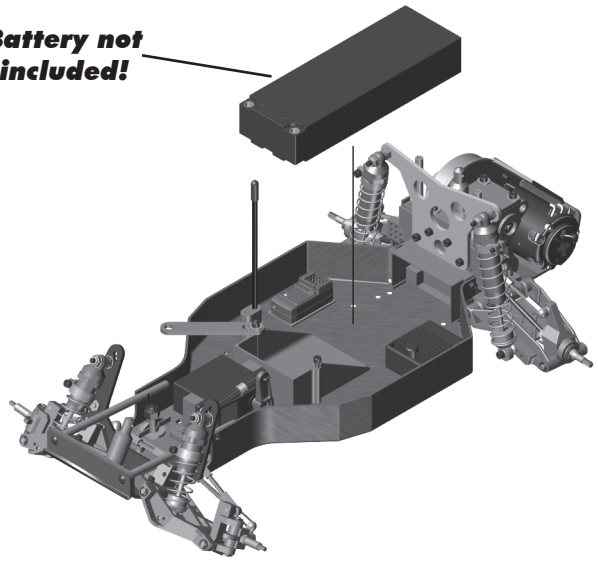

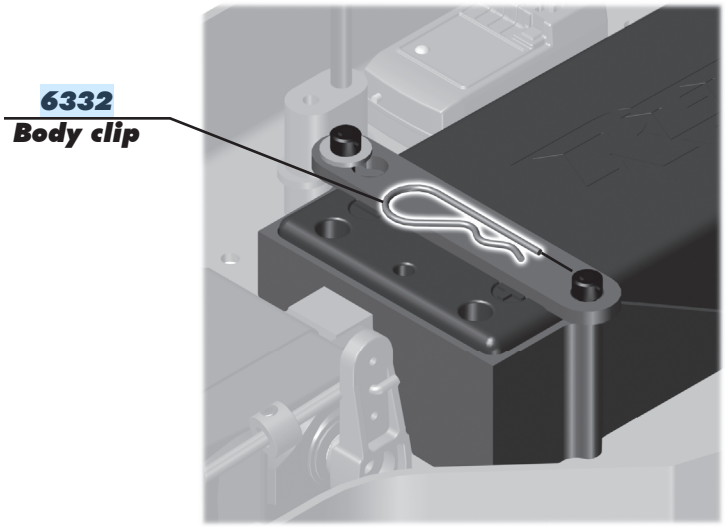

:: Wheels / Tires and Body - Bag J - Step 1

TIP: For faster motors, it is recommended to glue the tire bead to the wheels!

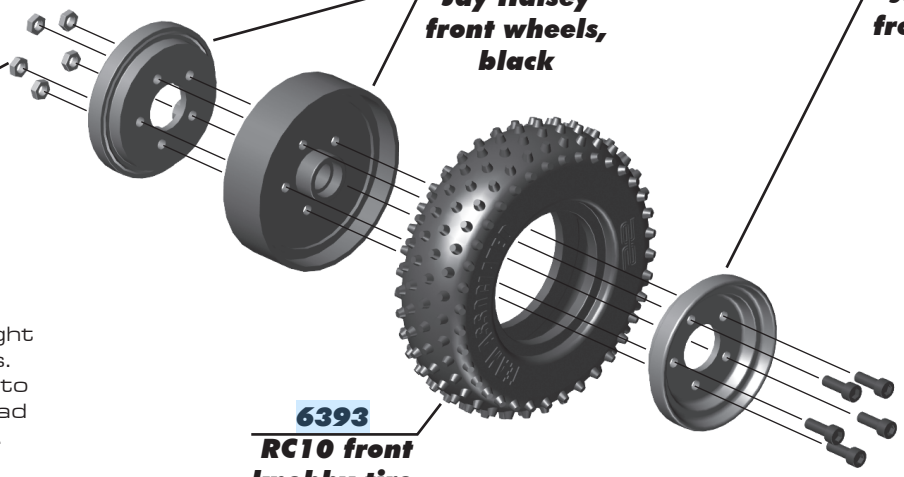

Build 2

:: Wheels / Tires and Body - Bag J - Step 2

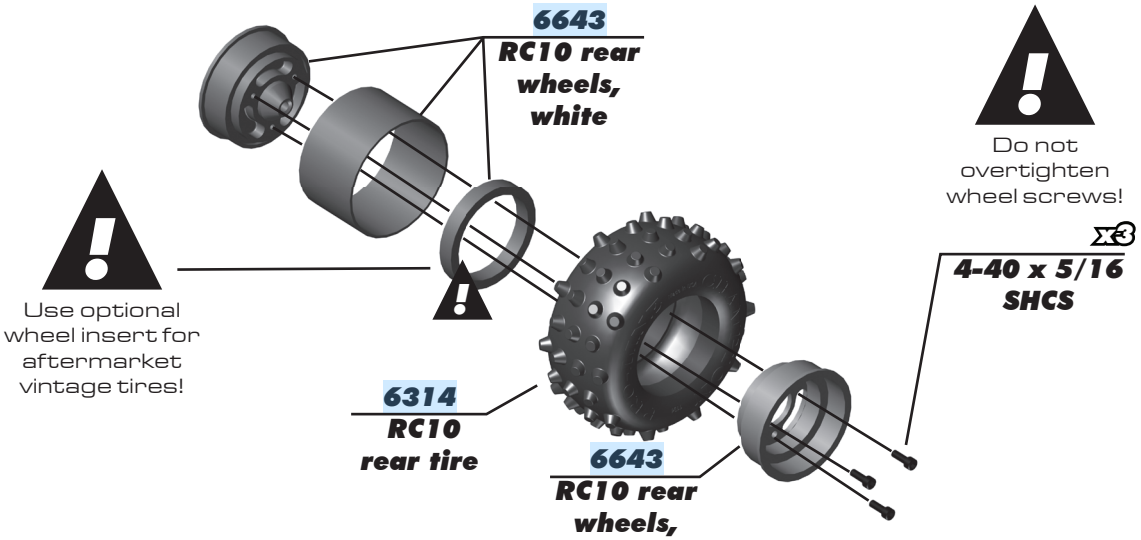

Build 2

:: Wheels / Tires and Body - Bag J - Step 3

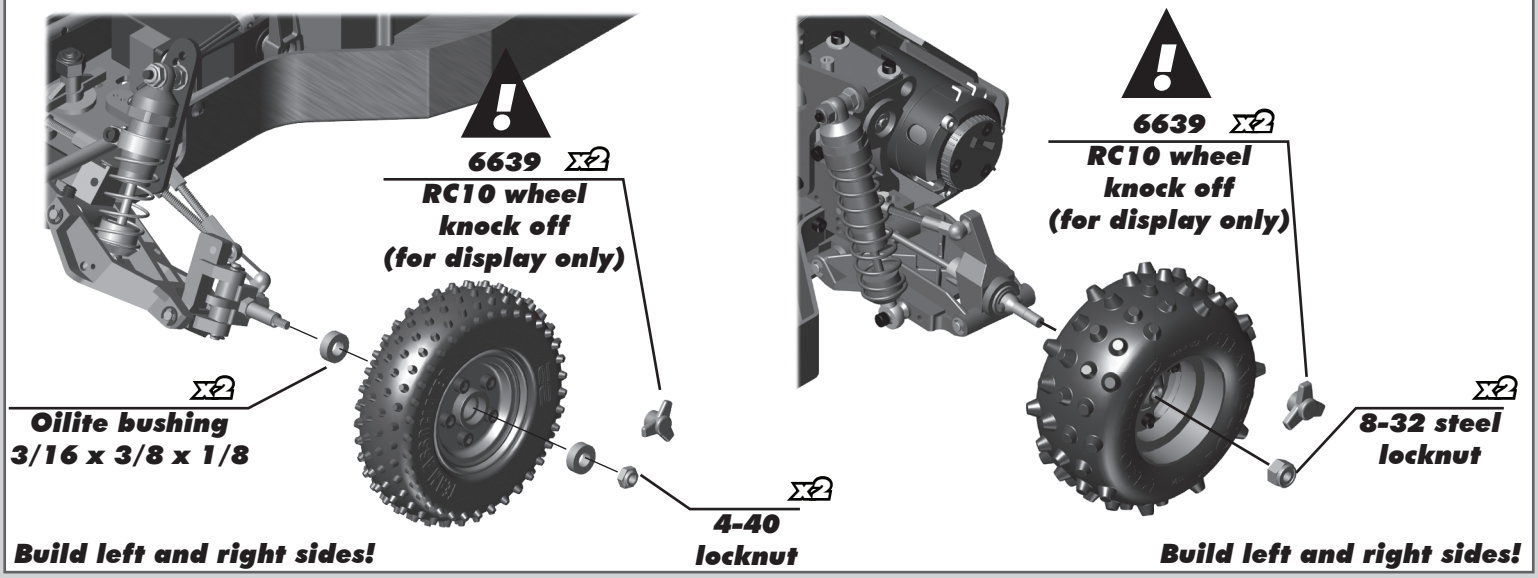

:: Wheels / Tires and Body - Bag J - Step 4

Painting Tips:

Your RC10 Kit comes with a clear polycarbonate body and wing. You will need to prep the body and wing before you can paint them. Wash the inside thoroughly with warm water and liquid detergent. Dry the body and wing using a clean, soft, lint-free cloth. Use high quality masking tape to make masks for the windows and install them on the inside of the body (RC cars get painted from the inside).
Using high quality masking tape, apply tape to the inside of the body to create a design. Spray (either rattle can or airbrush R/C specific paint) the paint to the inside of the body (prefferably dark colors first, lighter colors last).

NOTE: use ONLY paint that is recommended for use with (polycarbonate) plastics. If you do not, you can destroy the plastic body and wing!!!!).
It is recommended to wear a mask while painting.

After the paint has dried, cut the body and wing along the trim lines. Make sure to drill or use a body reamer to make the holes for the body mounts, wing mounts, and antenna!

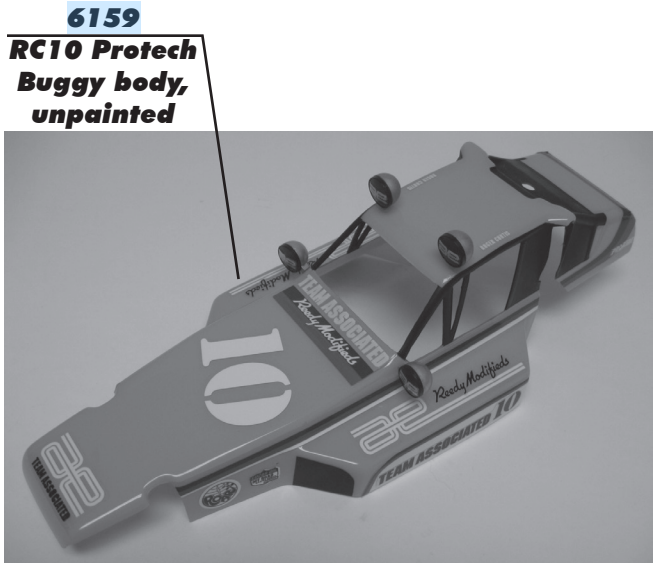

:: Wheels / Tires and Body - Bag J - Step 5

Light Buckets:

Press the light bucket halves together.
Install light buckets with 2-56 x 3/16 SHCS in areas shown.

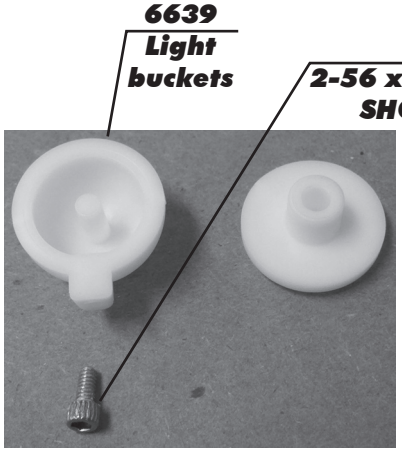

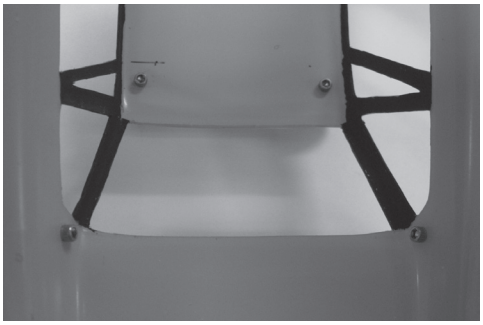

Mount the light buckets in any location of your choosing, or not at all.



:: Wheels / Tires and Body - Bag J - Step 8

Painting Tips:

Driver :
Your RC10 Kit comes with a clear polycarbonate driver figure. You will need to prep the driver figure before you can paint it. Wash the inside and outside thoroughly with warm water and liquid detergent. Dry the driver figure using a clean, soft, lint-free cloth. The driver figure can be painted from the inside or the outside, depending on what type of finish you would like. If painted from the inside, the painted sections will appear glossy. If painted on the outside, the painted sections will appear flat or matte finished. Trim as shown and install inside the body using strapping tape. After painting, cut the body and wing along the trim lines.

NOTE: use ONLY paint that is recommended for use with (polycarbonate) plastics. If you don't, you can destroy the plastic body, driver figure, and wing!!!!.





:: Wheels / Tires and Body - Bag J - Step 6

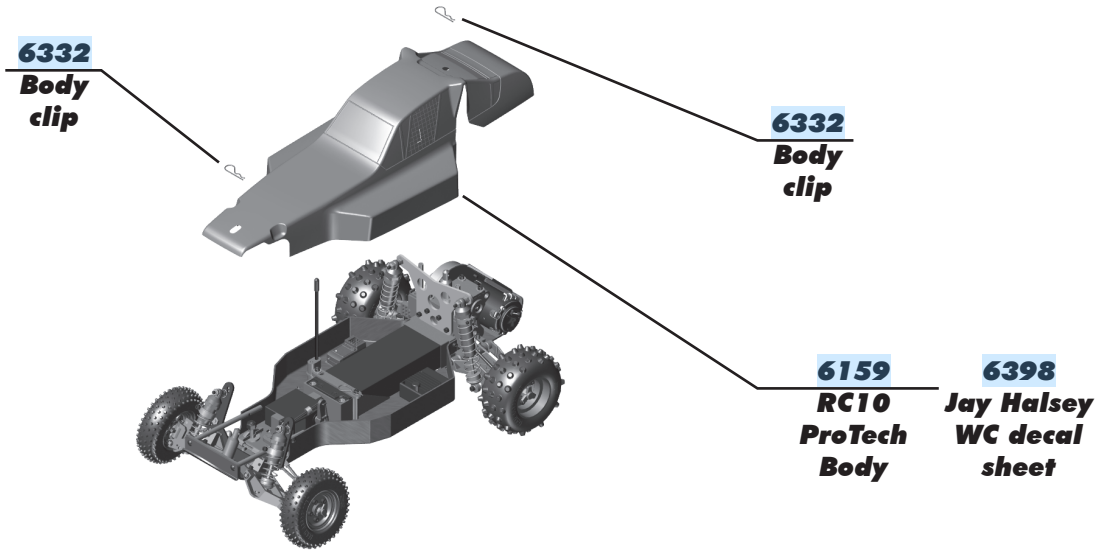

:: Wheels / Tires and Body - Bag J - Step 7

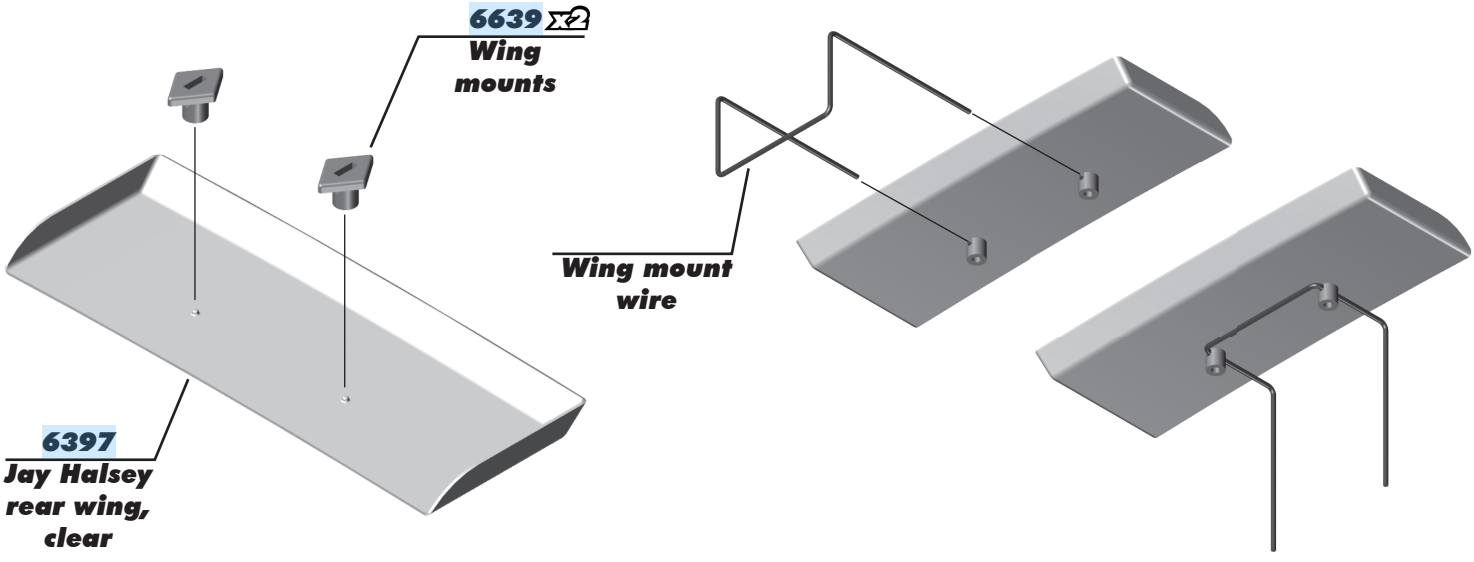

:: Wheels / Tires and Body - Bag J - Step 8

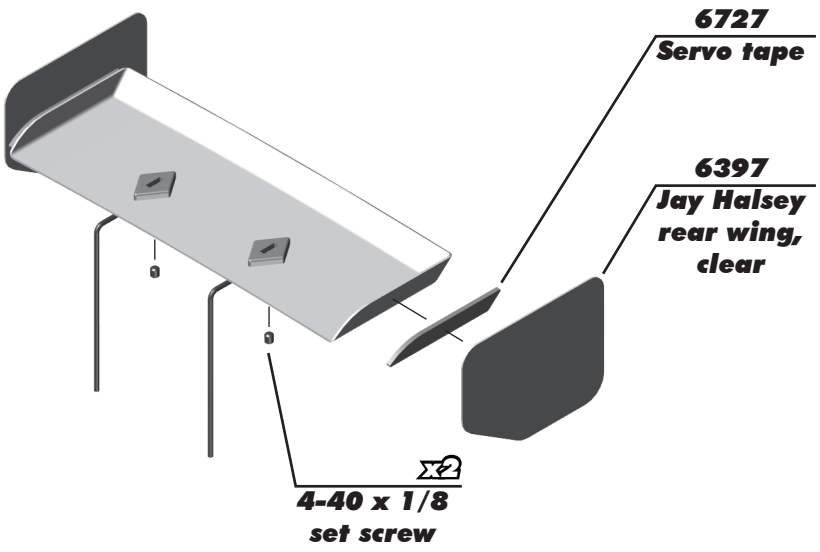

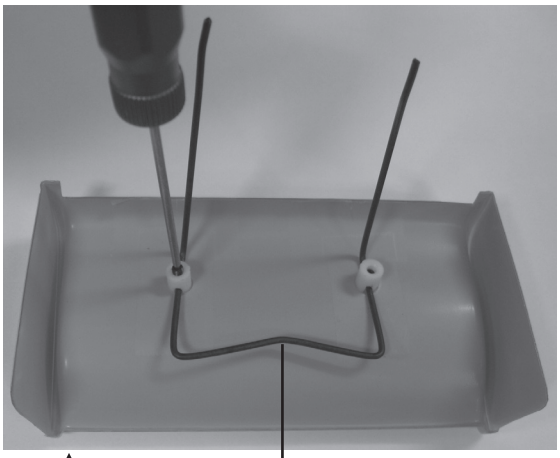

TIP: Bending the wire as shown can help ensure the wing buttons are parallel.

:: Wheels / Tires and Body - Bag J - Step 9

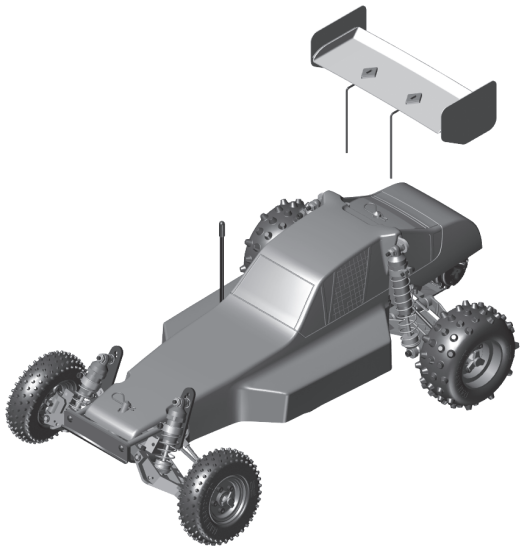

TIP: Bend wire to create tight fit inside wing tubes.

:: Notes

:: Jay Halsey RC10 World Champion Decal Installation Instructions

