RC10 B84.1 TEAM KIT

TEAM ASSOCIATED

1:10 Scale 4WD Electric Off Road Competition Buggy Kit Manual

#90058 RC10 B84.1 Buggy Kit

WeAreAE CHAMPIONS by DESIGN AssociatedElectrics.com

TEAM ASSOCIATED

:: Introduction

Thank you for purchasing this Team Associated product. This assembly manual contains instructions and tips for building and maintaining your new vehicle. Please take a moment to read through the manual and familiarize yourself with the steps. We are continually changing and improving our designs; therefore, actual parts may appear slightly different than the illustrations. New parts will be noted on supplementary sheets located in the appropriate parts bags.
Check each bag for these sheets before you start to build.
Check www.rc10.com for the latest versions of our instruction manuals.

:: RC10B84.1 Features

- Wide Tongue Chassis for Improved Durability
- V2 Side Rails to Account for Wide Tongue Chassis
- Wide A and B Mounts
- 73mm Gull Wing Front Arm Suspension
- Carbon Fiber Front Shock Tower for 73mm arm Geometry
- Molded Front Shock Tower Cover for 73mm arm Shock Tower
- V2 Steering Posts and Bellcranks to Reduce Vertical Movement in the Steering Rack
- Long HD Differential Outdrives for the Rear Differential
- 66mm Rear CVA Bones
- New A and D mount 0.7mm shims
- Molded Front Bumper With Optional Bumper That Covers Anti-roll Bar Mounts

:: RC10B84.1 Legacy Features (from RC10 B84)

- Molded Height-Adjustable Gearboxes Front and Rear with Additional +2 Rear Gearbox for High-Grip Conditions
- Optimized Steering Bellcranks and Rack: improved bumpsteer control at all ride heights
- Chassis Bracing: Fine tune chassis flex characteristics with upper and lower chassis bracing front and rear
- Standard and HRC (High Roll Center) Rear Hubs Included
- Insert adjustable caster block with 0, +/-1, and +/-2 degree inserts included
- Forward and Back Motor Positions: used for further weight bias adjustment
- Highly Adjustable Battery Holder with Thumb Tabs: allows for easy battery removal and fine tuning of weight bias
- 2.5mm Thick Tapered 7075-T6 Aluminum Chassis with 10 Degrees of Kickup and Improved Departure Angle
- Decoupled Slipper Clutch Included
- Aluminum Center-Mounted Servo Mount
- Two heights Included for Rear Wing Mount
- 7-inch Rear Wing
- Low-Profile Body
- 3.5mm Turnbuckles and Ballcups
- 13mm Big-Bore Shocks

:: Additional

Your new RC10B84.1 Kit comes unassembled and requires the following items for completion (refer to AssociatedElectrics.com for suggestions):

- R/C two channel surface frequency radio system
- AA-size batteries for transmitter
- Electronic Speed Control (“ESC”)
- Steering servo
- R/C electric motor
- Pinion gear, size determined by type/turn or kV of motor
- Battery charger (a peak detection charger, or LiPo compatible charger)
- 2 cell LiPo battery pack
- Polycarbonate specific spray paint
- Cyanoacrylate glue (“CA”) (#1697)
- Thread locking compound (#1596)
- Tires and Inserts, Fronts and Rears

:: Other Helpful Items

- Silicone Shock Fluid (Refer to AssociatedElectrics.com for complete listings)
- FT Body Scissors (#1737)
- FT Hex/Nut Wrenches (#1519)
- FT Universal Tire Balancer (#1498)
- FT Dual Turnbuckle Wrench (#1114)
- FT Body Reamer (#1499)
- Needle Nose Pliers
- Calipers or a Precision Ruler
- Green Slime shock lube (#1105)
- Shock Pliers (#1681)
- FT Ballcup Wrench (#1579)
- Soldering Iron
- Wire Cutters
- Hobby Knife

Associated Electrics, Inc.
21062 Bake Parkway.
Lake Forest, CA 92630

ASSOCIATED ELECTRICS
Since 1984

Customer Service
Tel: 949.544.7500
Fax: 949.544.7501

http://www.AssociatedElectrics.com • http://www.instagram.com/teamassociatedrc/ • http://www.facebook.com/TeamAssociated/

:: Hardware - 1:1 Scale View

Button Head (bhcs)

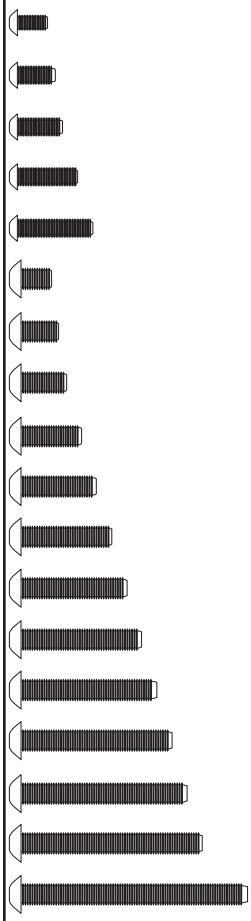

2x4mm (31510)
2.5x5mm (31519)
2.5x6mm (31520)
2.5x8mm (31521)
2.5x10mm (31522)
3x4mm (91158)
3x5mm (31530)
3x6mm (31531)
3x8mm (31532)
3x10mm (25211)
3x12mm (89202)
3x14mm (25187)
3x16mm (89203)
3x18mm (2308)
3x20mm (25188)
3x22mm (25189)
3x24mm (89204)
3x30mm (91478)

Flat Head (fhcs)

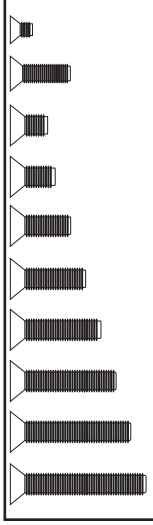

2x3mm (91743)
2.5x8mm (31472)
3x5mm (31540)
3x6mm (31541)
3x8mm (25201)
3x10mm (25202)
3x12mm (25203)
3x14mm (89208)
3x16mm (25204)
3x18mm (89209)

LP Socket Head (lp shcs)

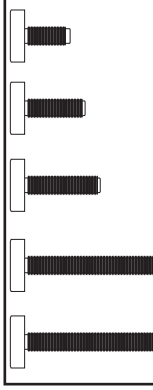

3x6mm (41089)
3x8mm (41096)
3x10mm (41090)
3x22mm (41095)
3x24mm (41097)

Ball Bearings

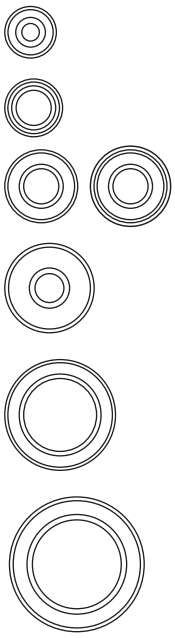

4x7x2.5mm (31732)
5x8x2.5mm (31400)
5x10x4mm (91560)
5x10x4mm flanged (92324)
5x12x4 (91567)
10x15x4 (91563)
12x18x4 (92544)

Ballstuds

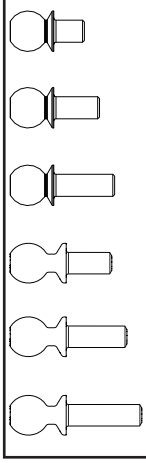

HD, short neck 4mm (32041)
Ti HD, short neck 4mm (32095)
HD, short neck 6mm (32042)
Ti HD, short neck 6mm (32096)
HD, short neck 8mm (32040)
Ti HD, short neck 8mm (32097)
HD 6mm (91047)
Ti HD 6mm (91751)
HD 8mm (91048)
Ti HD 8mm (91752)
HD 10mm (91049)
Ti HD 10mm (91753)

Set Screws

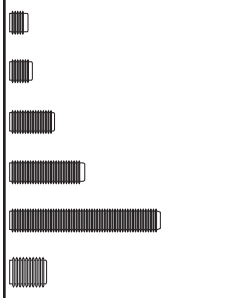

3x2.5mm (31500)
3x3mm (25225)
3x6mm (81257)
3x10mm (4671)
3x20mm (91737)
4x5mm (25226)

Cap Head (shcs)

1.6 x 5mm (91611)

Nuts (lock/plain)



M3 Nut (91477)
M3 Alum. Locknut, Blue (31550)
M3 Locknut, Black (25215)

M3 Locknut w/Flange (25612)
FT 3mm Locknuts, Blue (25392)

M4 Locknuts:
Serrated Steel LP (91150)
Serrated Steel (Silver) (91826)
FT Aluminum (Blue) (31551)
Serrated Aluminum (Black) (91738)

Shims and Washers



5.5x0.5mm (31381)
5.5x1.0mm (31382)
5.5x2.0mm (31383)
3x8mm Washer (89218)

Notes:

:: Table of Contents

1..... Cover

2..... Introduction

3.....1:1 Hardware “Fold Out”

4..... Table of Contents

5.....Chassis and Steering Build
Bag 1

7.....Suspension Arms Build
Bag 2

8.....Front / Rear Gear Differentials Build
Bag 3

8.....Front / Rear Gearbox Build
Bag 4

11.....Shock Tower Build
Bag 5

13.....Caster and Steering Block Build
Bag 6

14.....Rear Hubs Build
Bag 7

15.....Turnbuckles Build
Bag 8

16.....Center Slipper Build
Bag 9

17.....Anti-Roll Bars Build
Bag 10

17.....Shocks Build
Bag 11

20.....Electronics, Wheels, Body Build
Bag 12

22.....Tuning Tips

24..... Setup Sheet “Kit Setup”

25..... Setup Sheet “Blank”

26..... Back Cover

:: Notes

This symbol indicates a special note or instruction in the manual.

x2 This symbol indicates the number of the same part that is required.

2 This symbol indicates the order within a step to assemble parts.

FT FACTORY TEAM This symbol indicates there are optional FT parts available

This symbol indicates a Racers Tip.



There is a 1:1 hardware foldout page in the front of the manual. To check the size of a part, line up your hardware with the correct drawing until you find the exact size. Each part in the foldout has a number assigned to it for ordering replacement parts.

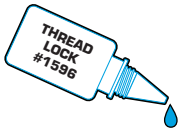

This symbol indicates where Thread Lock Adhesive should be applied. *not included

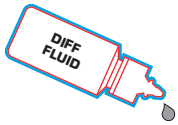

This symbol indicates where Diff Fluid should be applied.

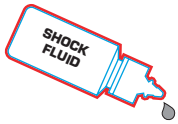

This symbol indicates where Shock Fluid should be applied.



This symbol indicates where FT Silicone Grease should be applied. *not included

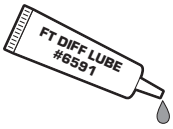

This symbol indicates where FT Diff Lube should be applied. *not included



This symbol indicates where Black Grease should be applied.



This symbol indicates where Green Slime can be applied. *not included

Bag 1 - Step 1

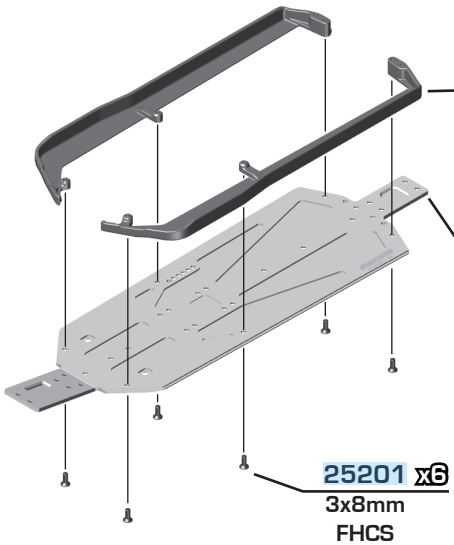

92614 x2
B84 Side rails, v2

92615
B84 FT Side rails, carbon, v2

92600
T84 Chassis

25201 x6
3x8mm FHCS

Note:
V2 side rails have less material near the tongue of the chassis to adopt the new wide tongue chassis.

Note:
T84 chassis is the same length as the original B84 chassis.

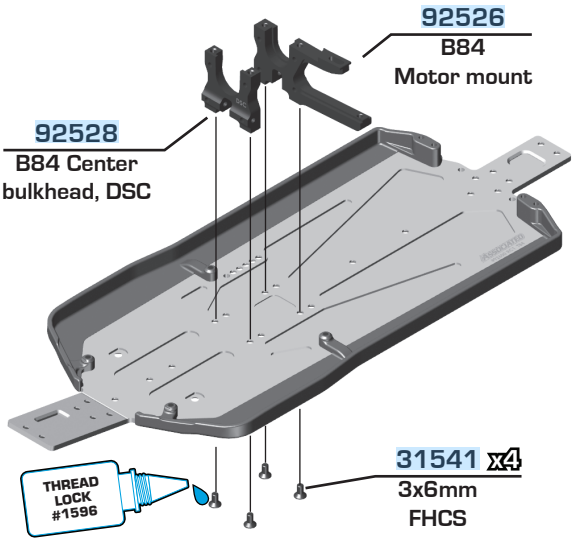

92526
B84 Motor mount

92528
B84 Center bulkhead, DSC

31541 x4
3x6mm FHCS

Bag 1 - Step 2

Optional plastic insert for less flex.



92504
B84 FT Carbon Chassis brace, front (motor forward)

92503
B84 Chassis brace, front (motor forward)

91819
Pivot balls

89204
3x24mm BHCS

Note arrow indicates motor forward or back

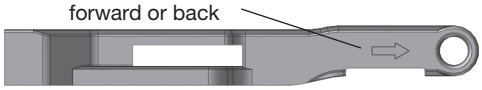

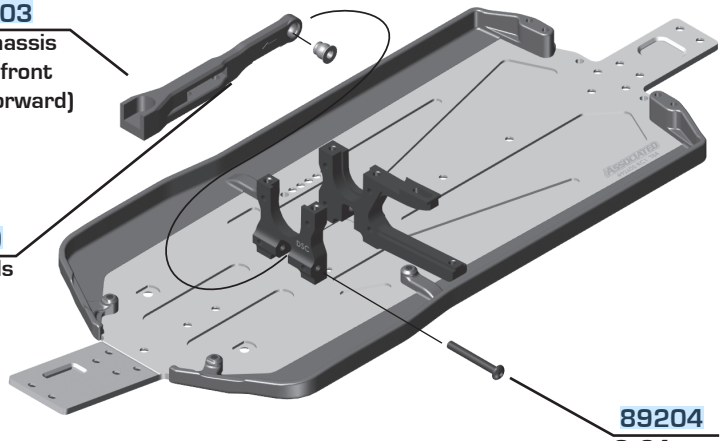

Bag 1 - Step 3

Optional plastic insert for less flex.



92504
B84 FT Carbon Chassis brace, rear (motor forward)

92503
B84 Chassis brace, rear (motor forward)

91819
Pivot balls

89204
3x24mm BHCS

Note arrow indicates motor forward or back



41090 x2
3x10mm LP SHCS

31383 x2
Ballstud washer, 2mm

25202 x2
3x10mm FHCS

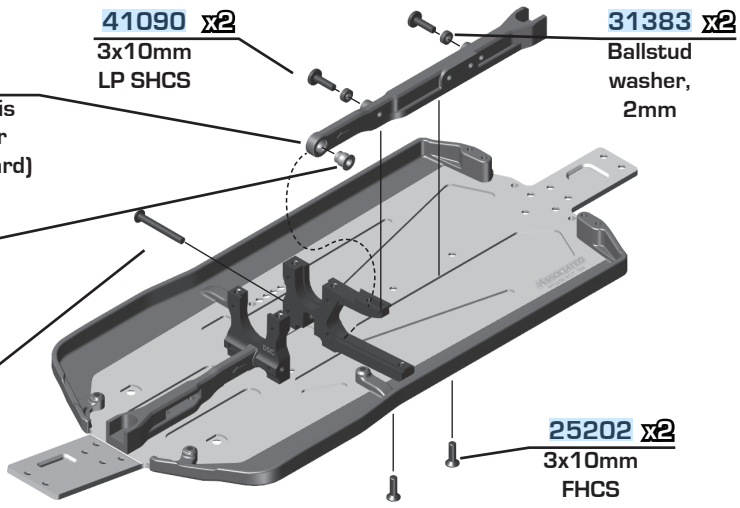

Bag 1 - Step 4

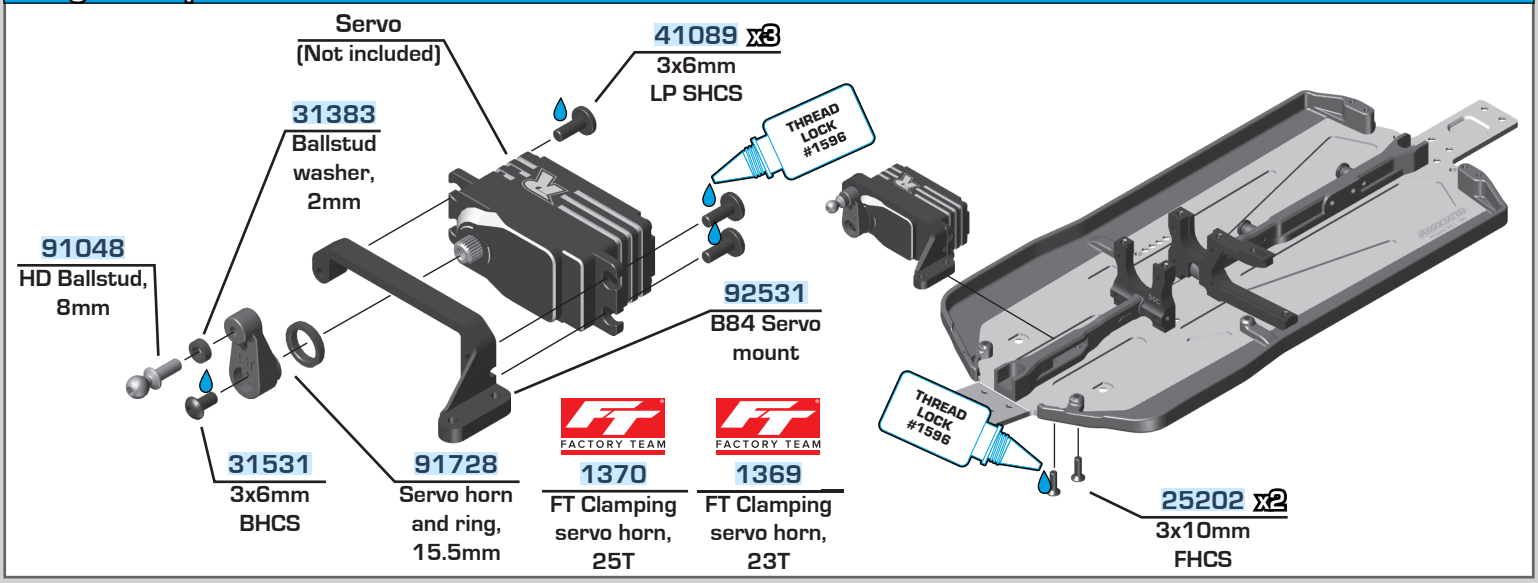

Bag 1 - Step 5

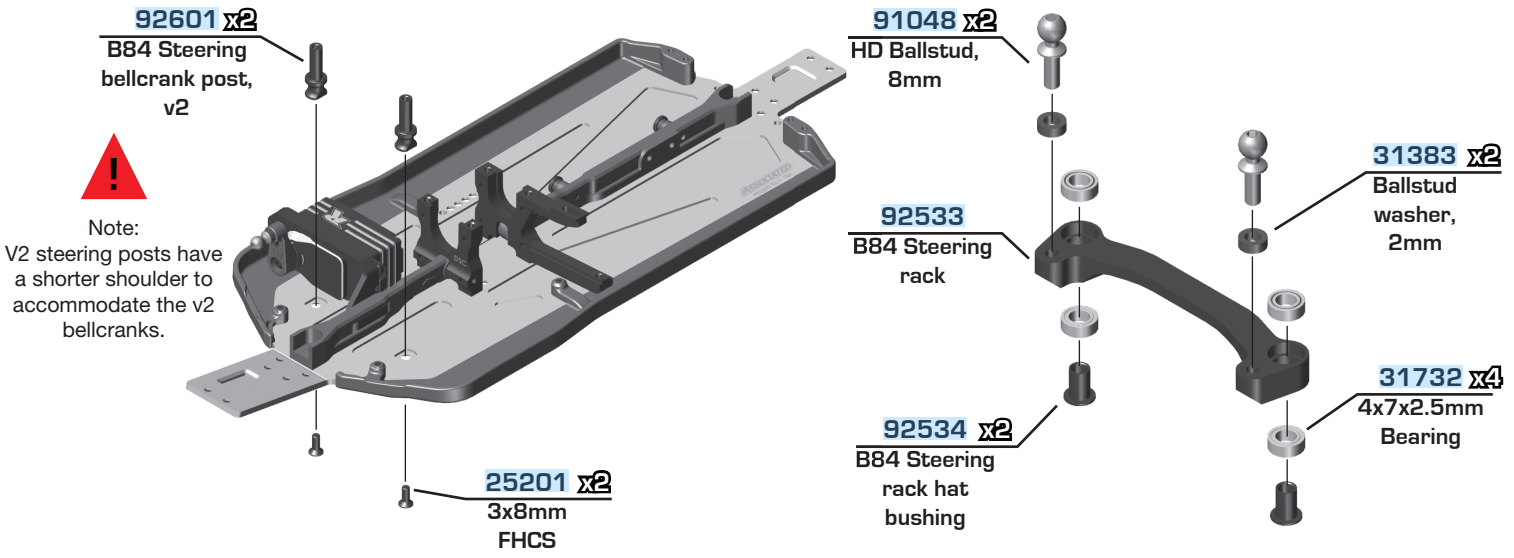

Bag 1 - Step 6

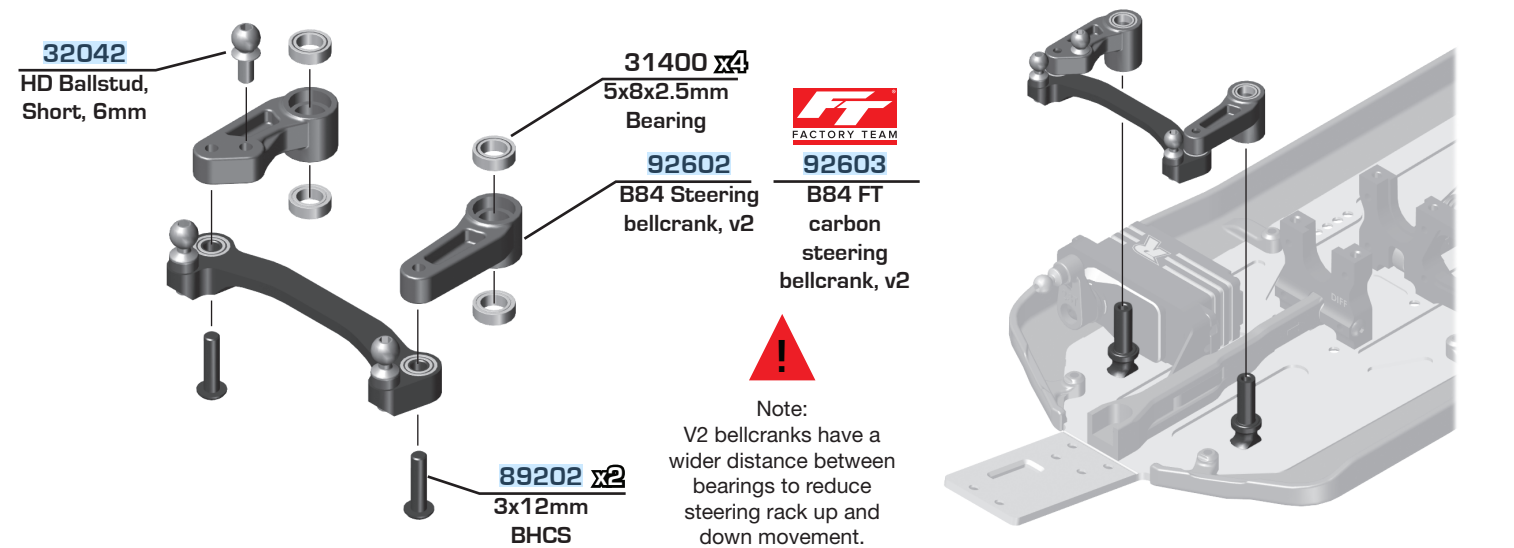

Bag 1 - Step 7

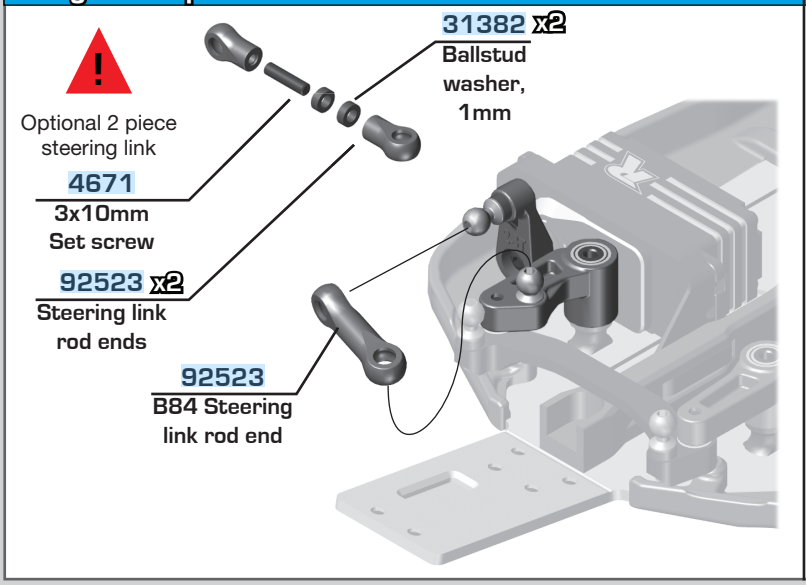

Bag 2 - Step 1

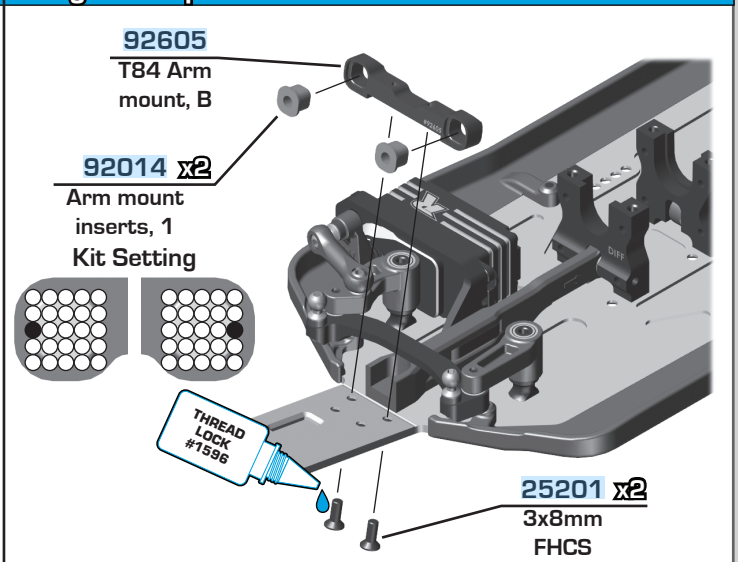

Bag 2 - Step 2

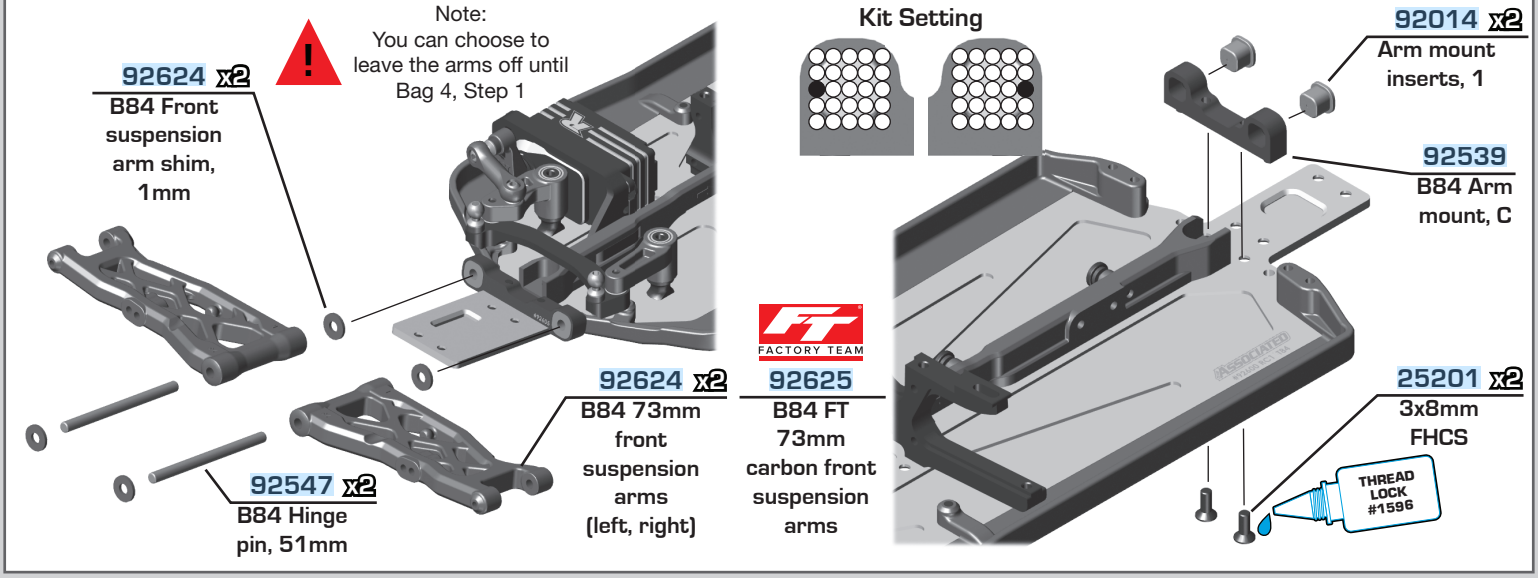

Bag 2 - Step 3

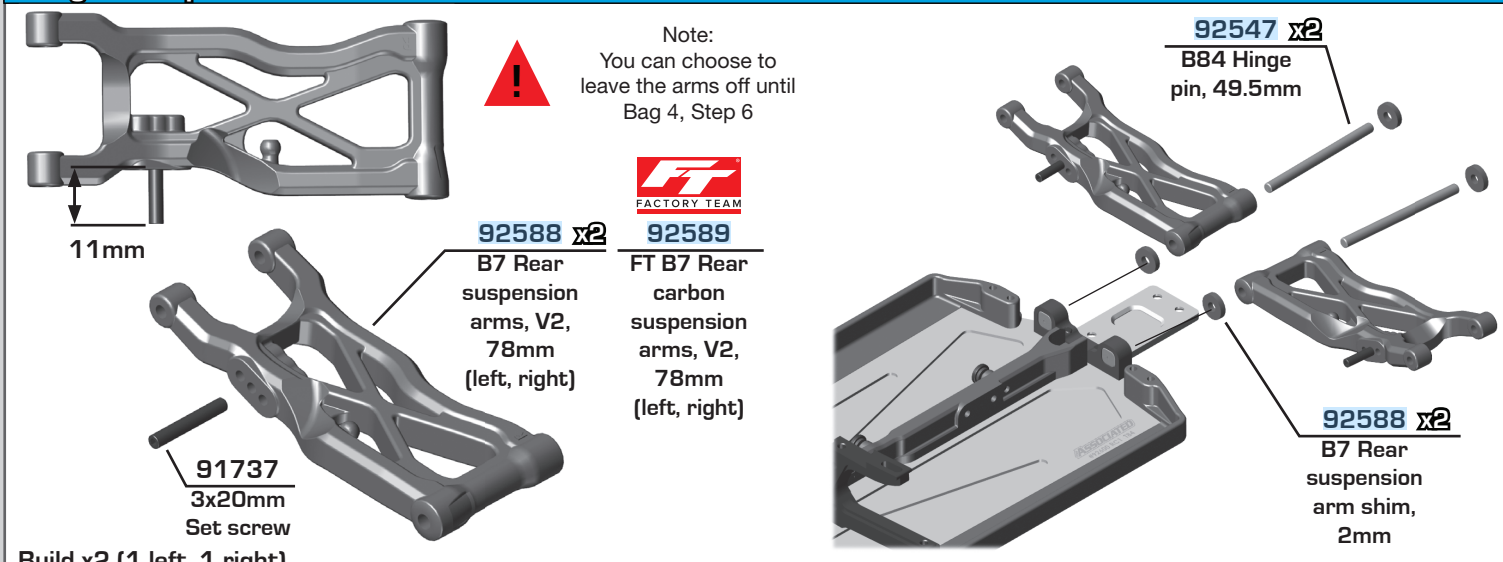

Build x2 (1 left, 1 right)

Bag 3 - Step 1

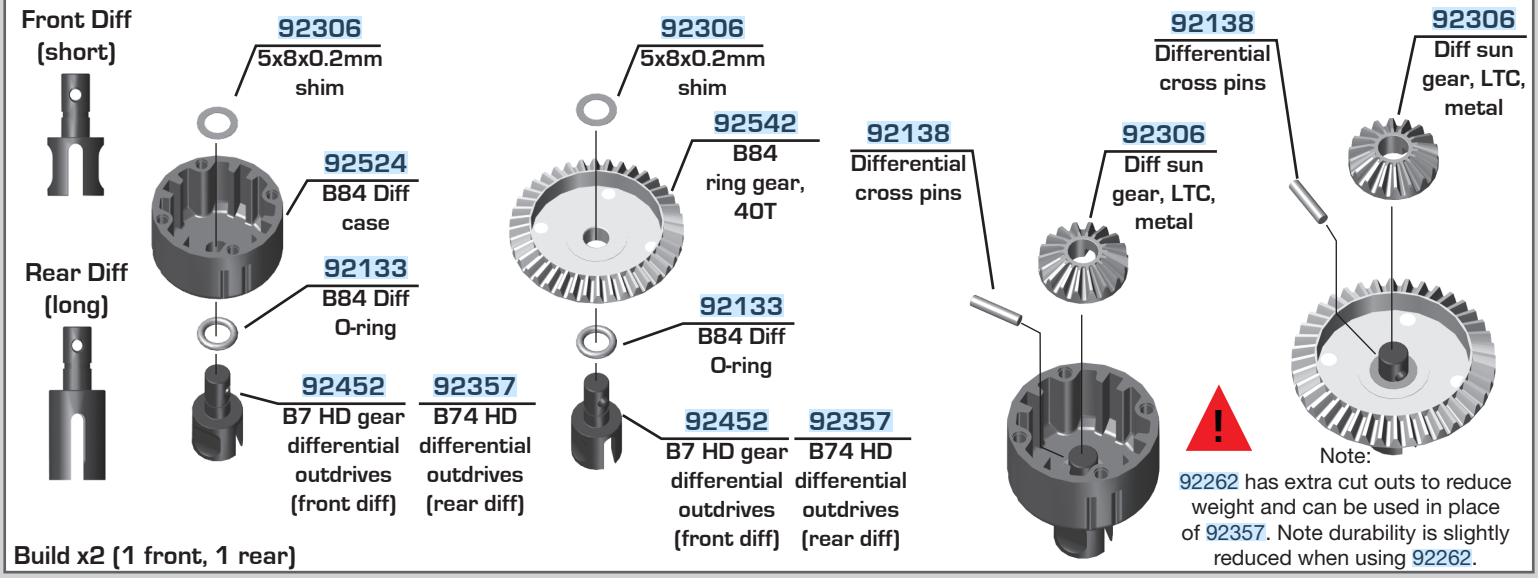

Build x2 (1 front, 1 rear)

Note:
92262 has extra cut outs to reduce weight and can be used in place of 92357. Note durability is slightly reduced when using 92262.

Bag 3 - Step 2

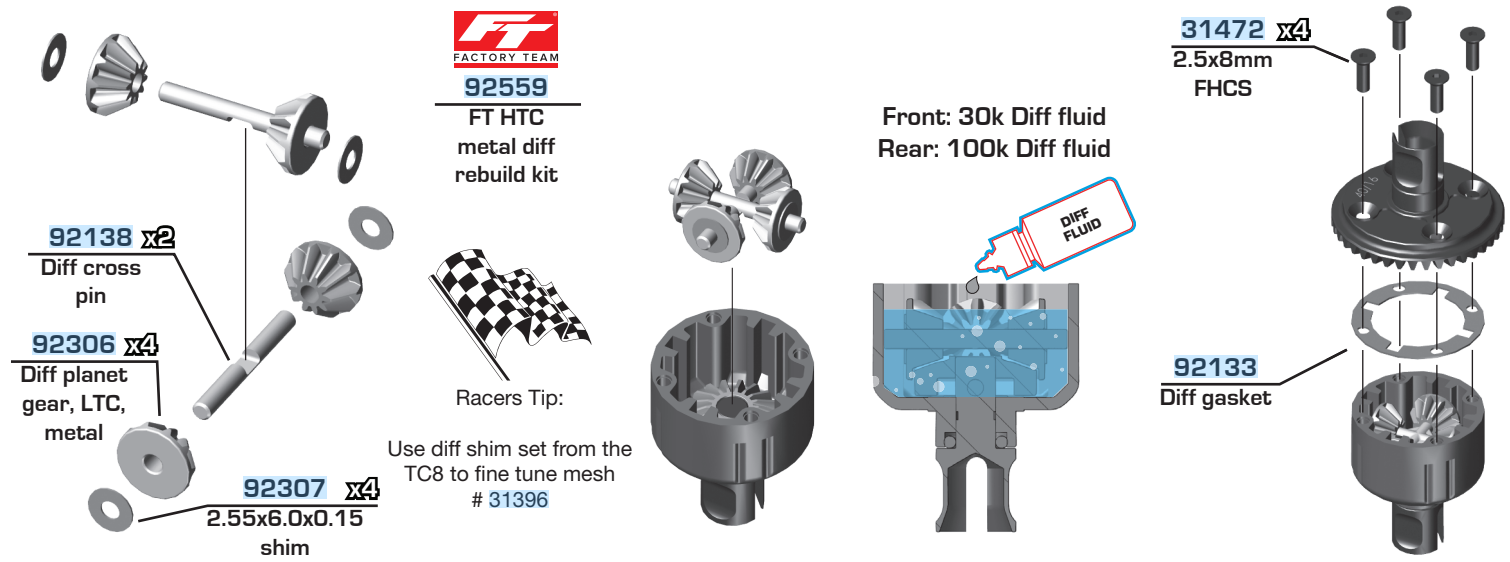

Bag 4 - Step 1

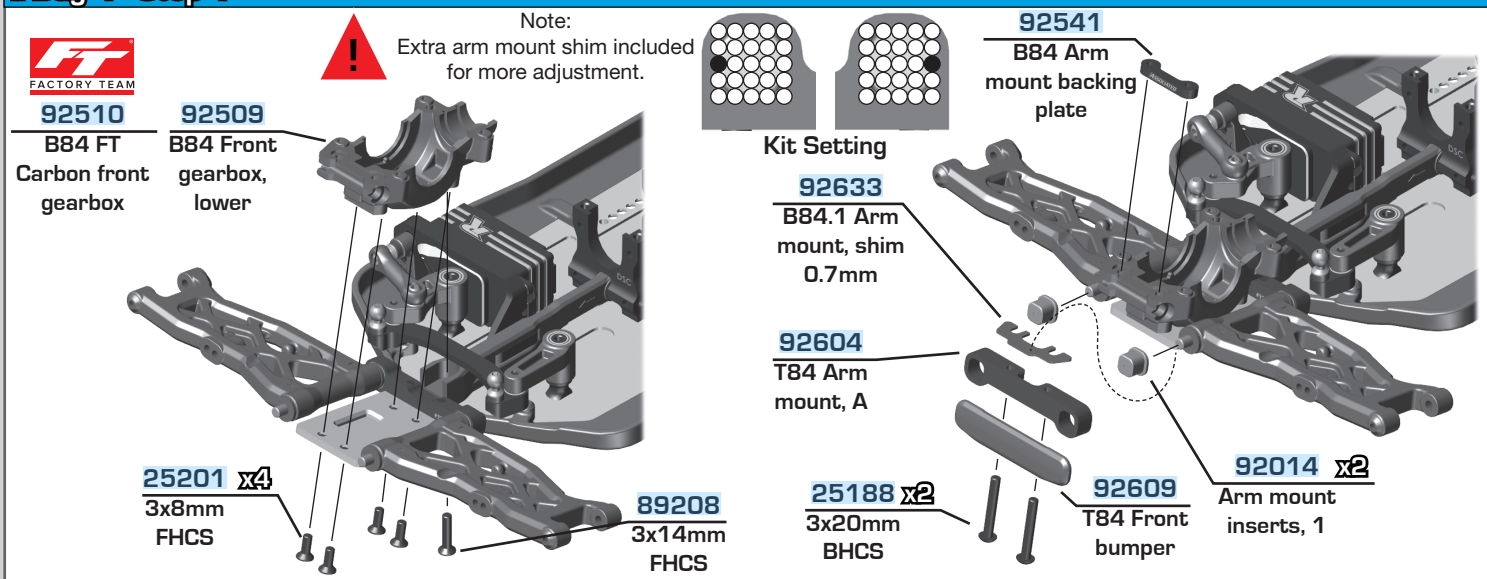

Bag 4 - Step 2

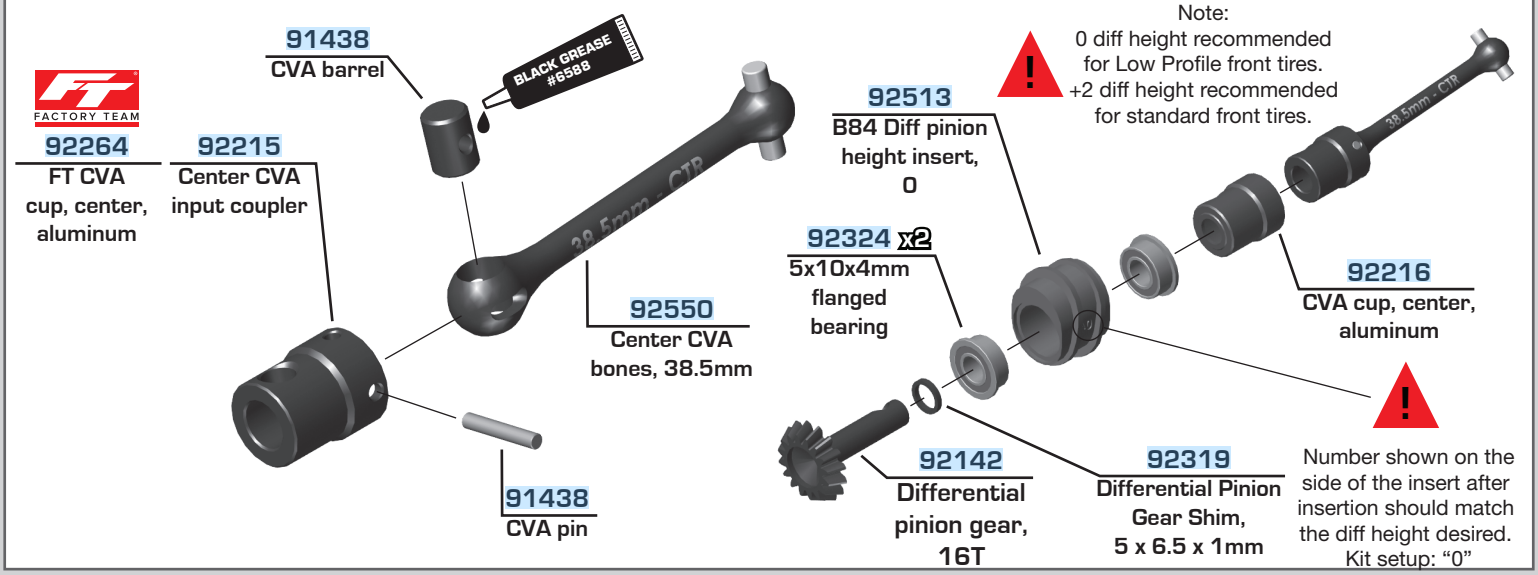

Bag 4 - Step 3

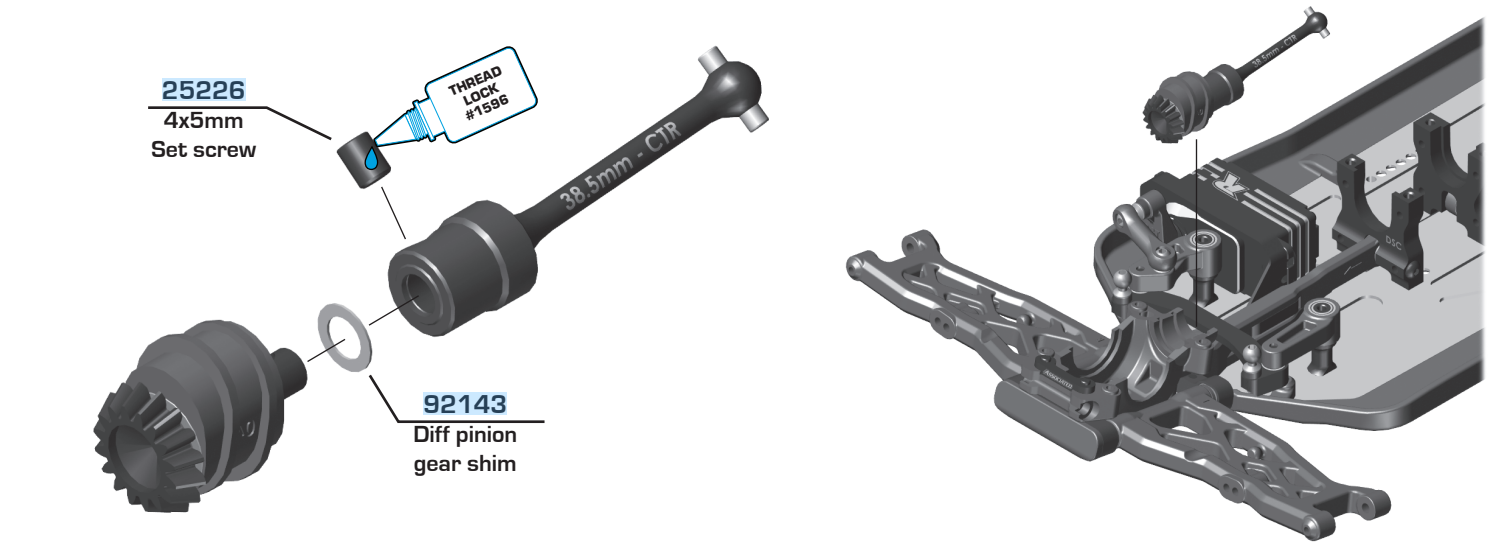

Bag 4 - Step 4

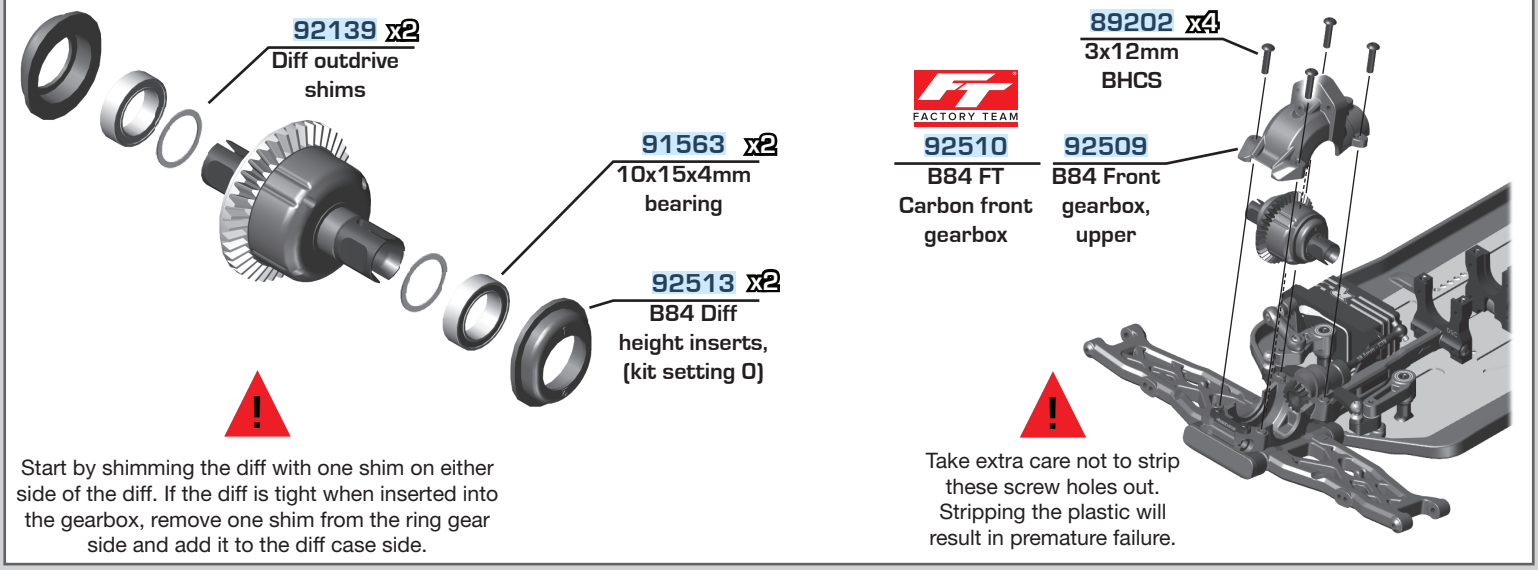

Start by shimming the diff with one shim on either side of the diff. If the diff is tight when inserted into the gearbox, remove one shim from the ring gear side and add it to the diff case side.

Take extra care not to strip these screw holes out. Stripping the plastic will result in premature failure.

Bag 4 - Step 5

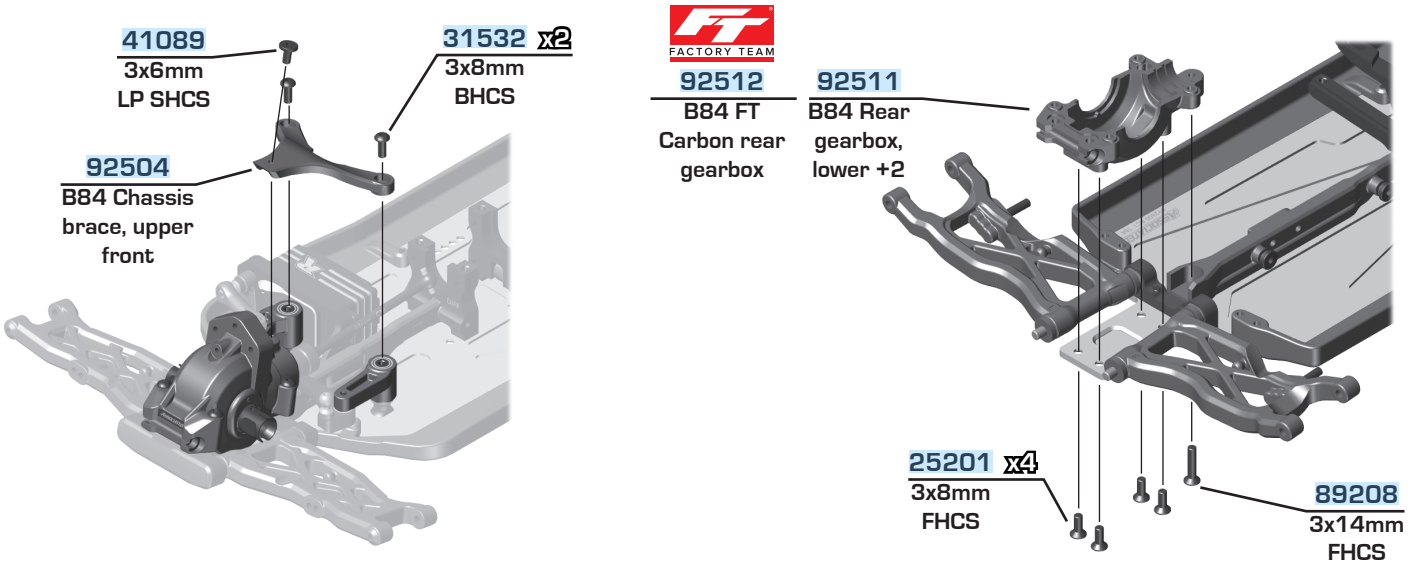

Bag 4 - Step 6

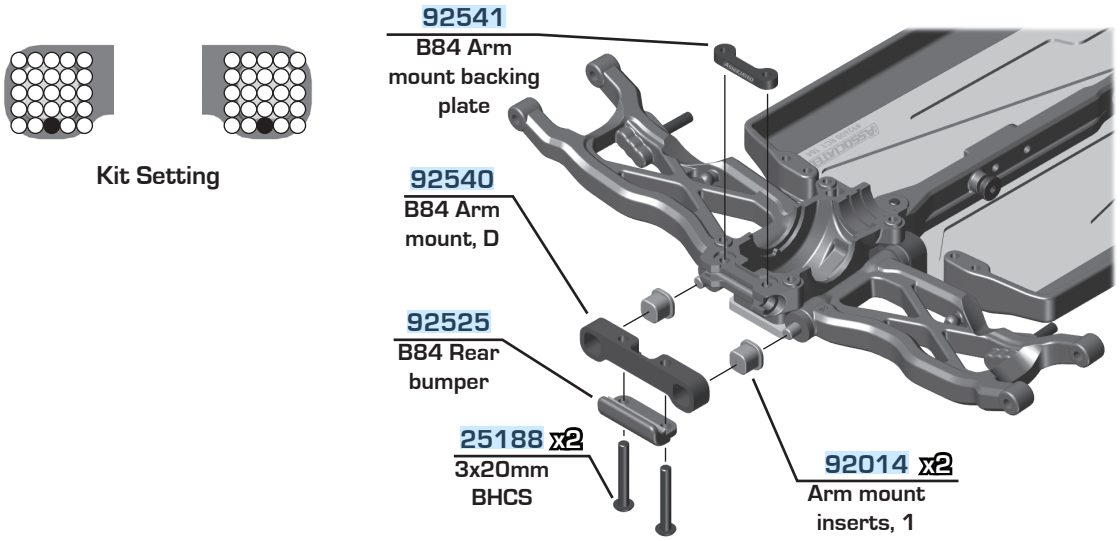

Bag 4 - Step 7

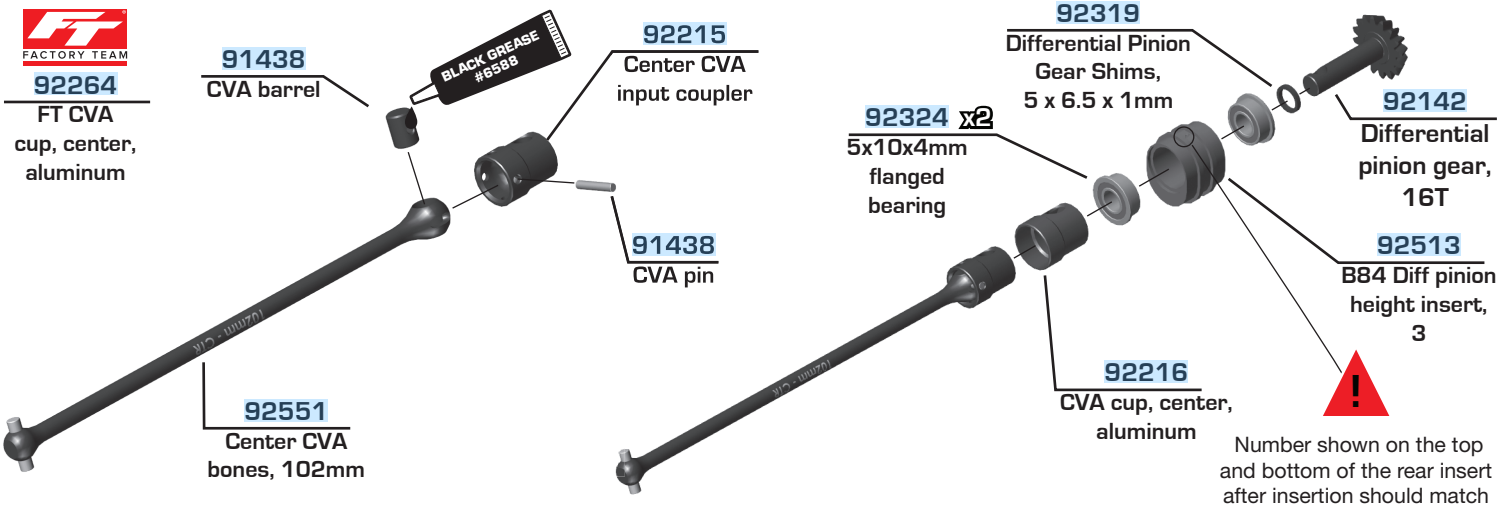

Number shown on the top and bottom of the rear insert after insertion should match the diff height desired. Kit setup: "3"

Bag 4 - Step 8

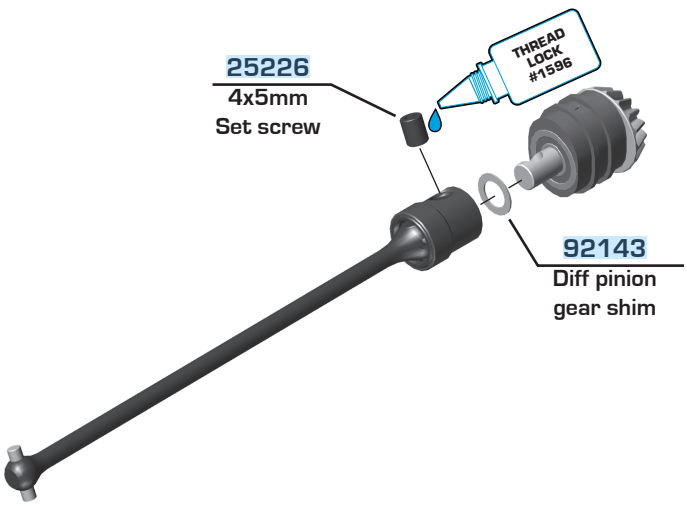

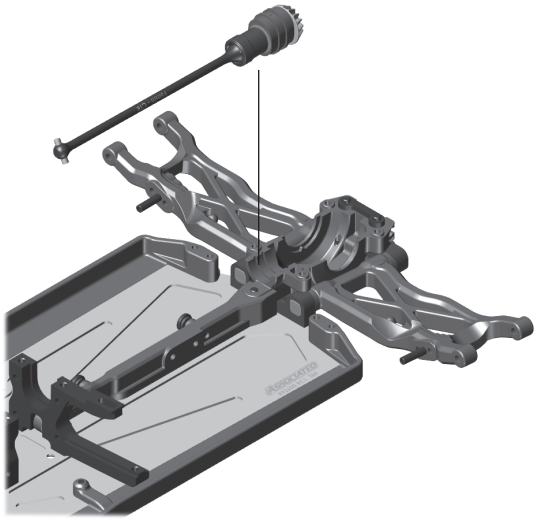

Bag 4 - Step 9

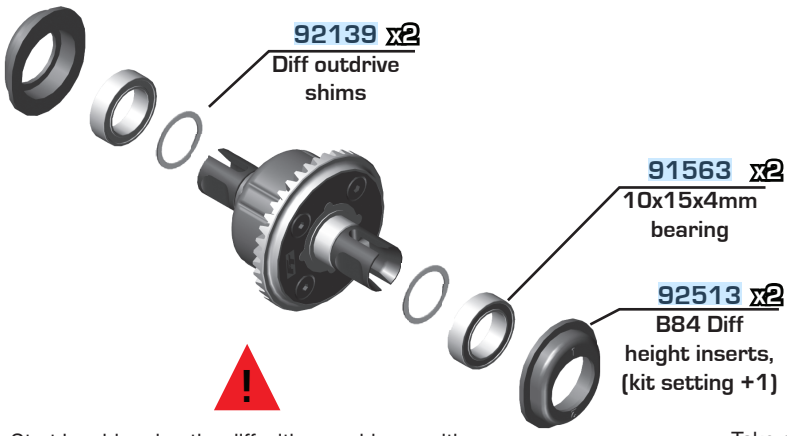

Start by shimming the diff with one shim on either side of the diff. If the diff is tight when inserted into the gearbox, remove one shim from the ring gear side and add it to the diff case side.

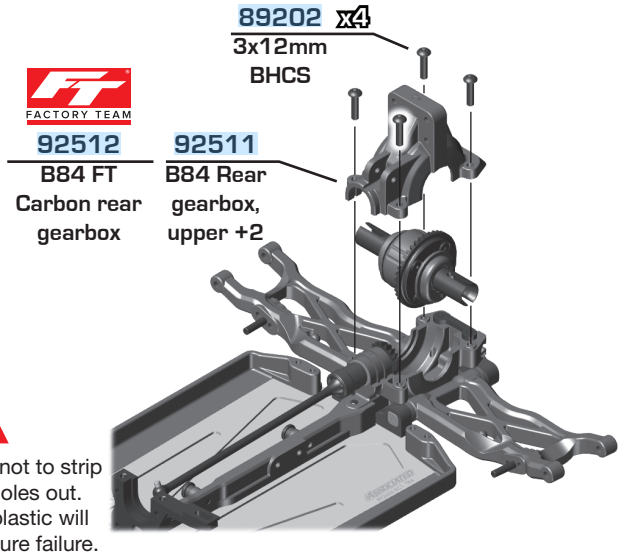

Take extra care not to strip these screw holes out. Stripping the plastic will result in premature failure.

Bag 4 - Step 10

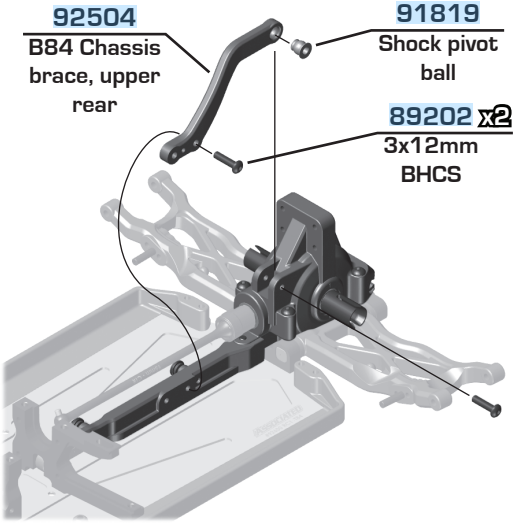

Bag 5 - Step 1

Note:
The wider front shock tower cover is used with the 73mm front arm tower.

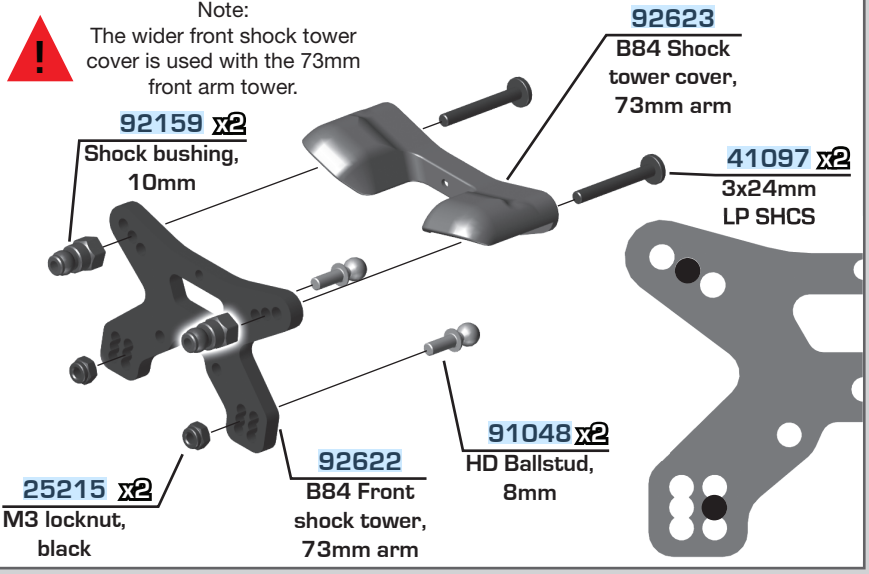

Bag 5 - Step 2

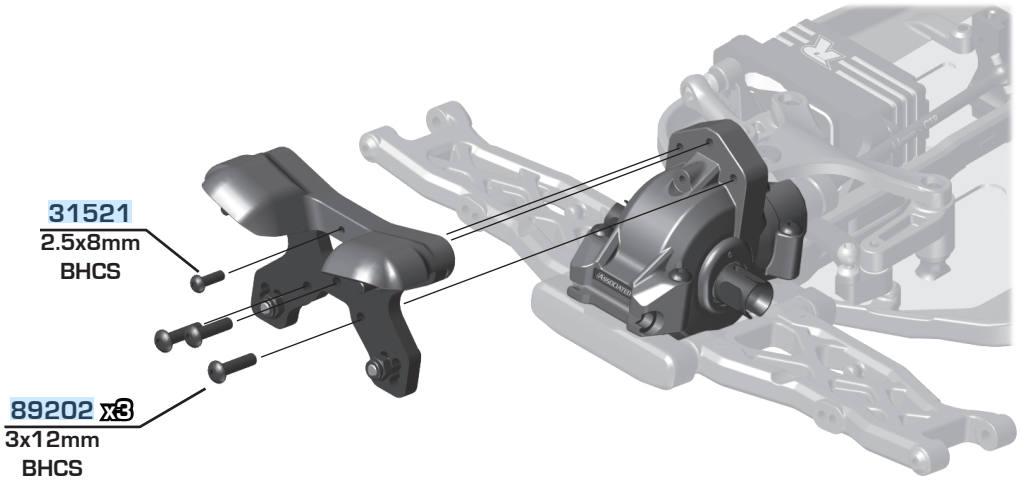

Bag 5 - Step 3

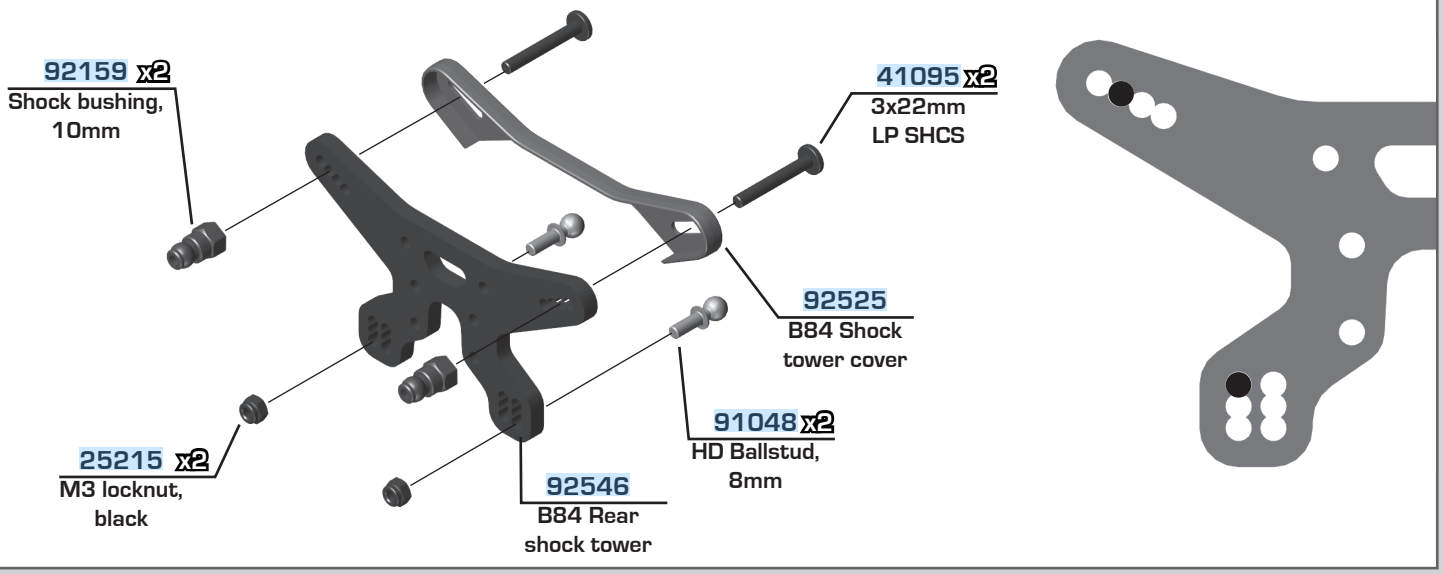

Bag 5 - Step 4

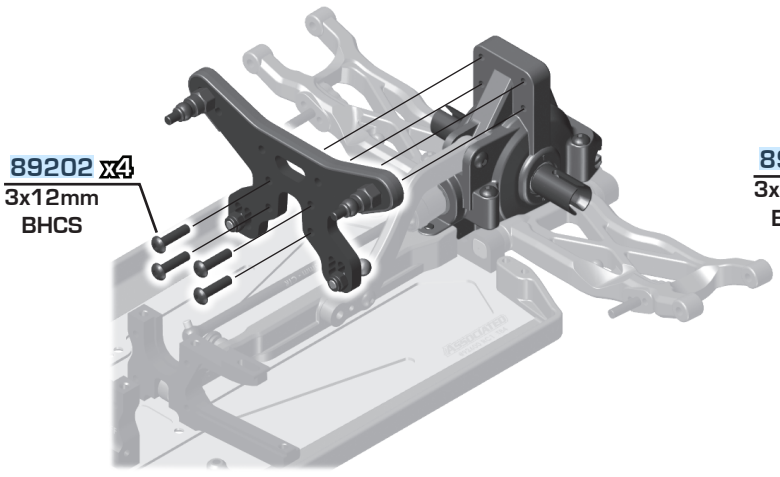

Note:
Optional standard
wing mount included!

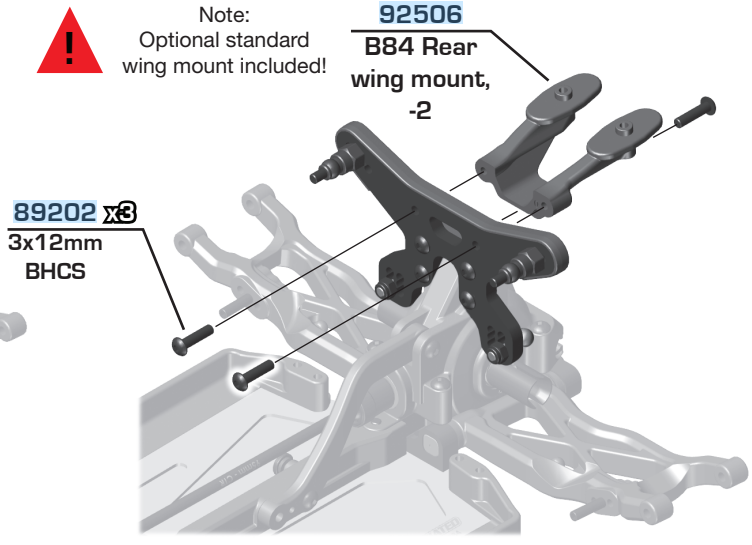

Bag 6 - Step 1

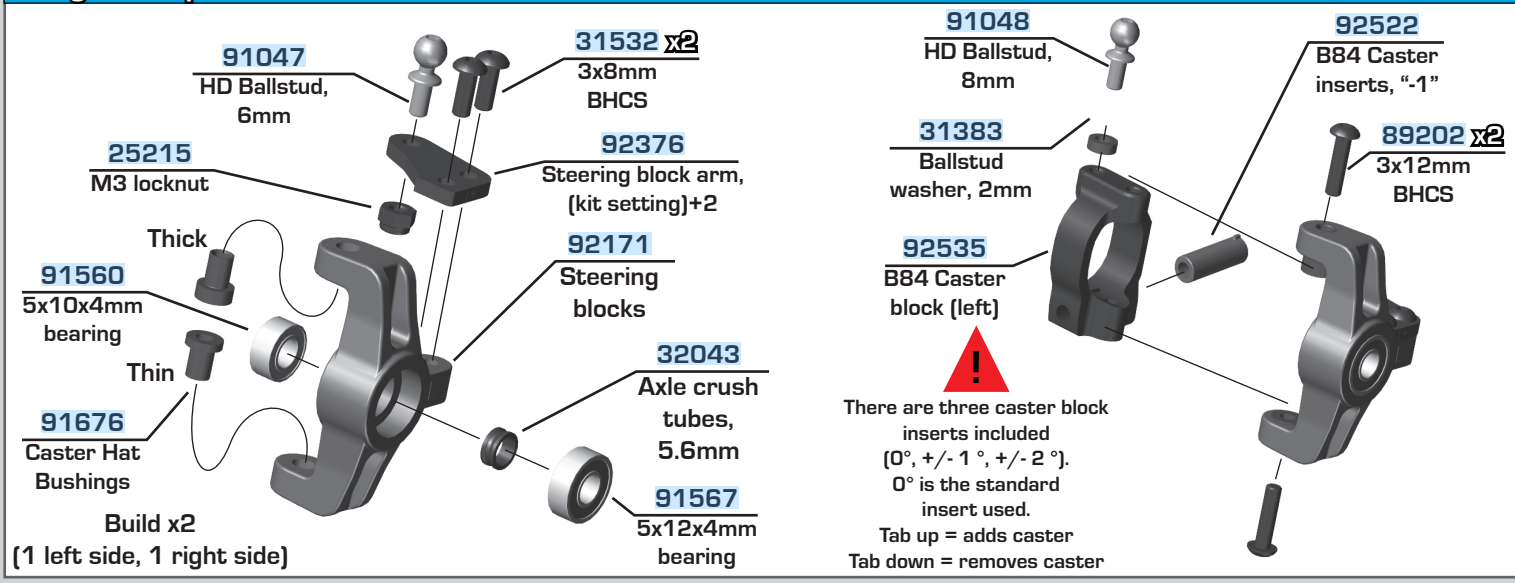

Bag 6 - Step 2

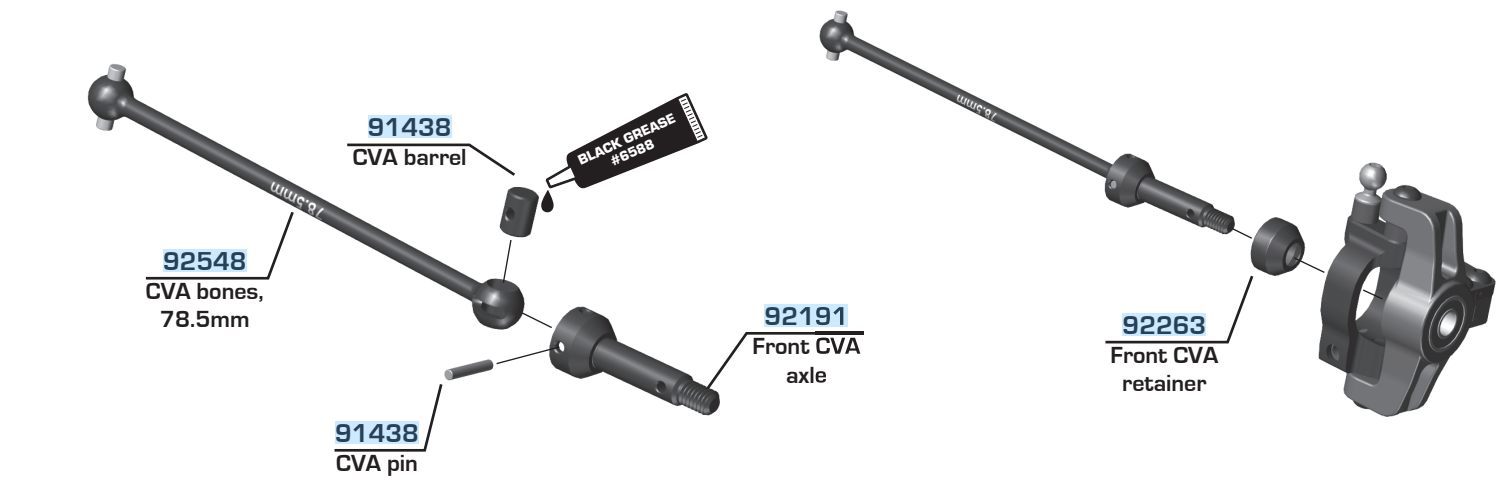

Bag 6 - Step 3

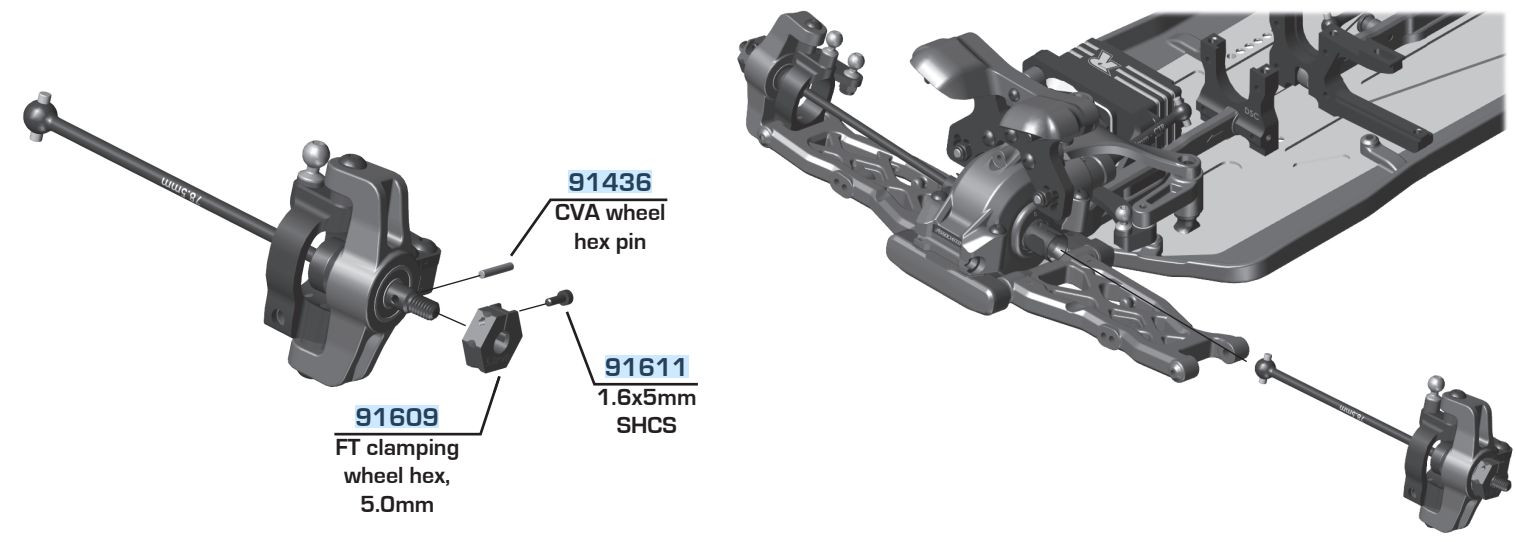

Bag 6 - Step 4

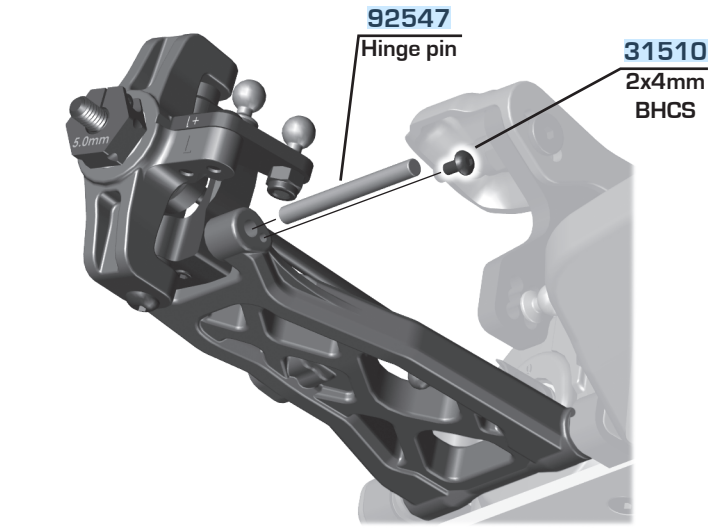

Bag 7 - Step 1

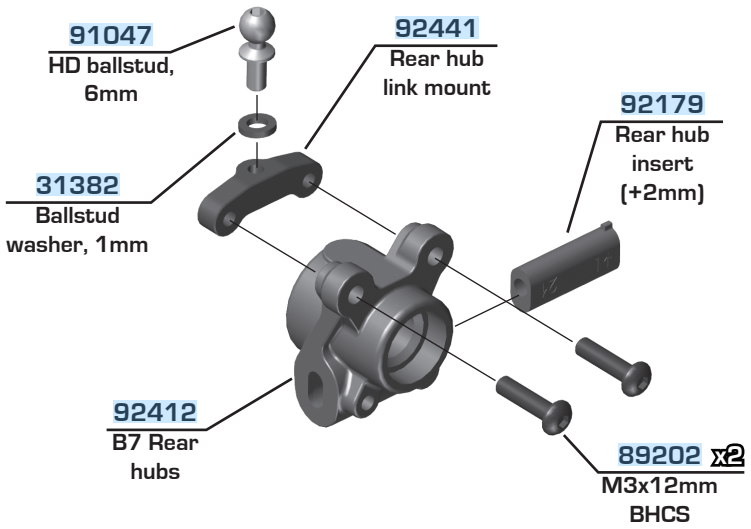

Bag 7 - Step 2

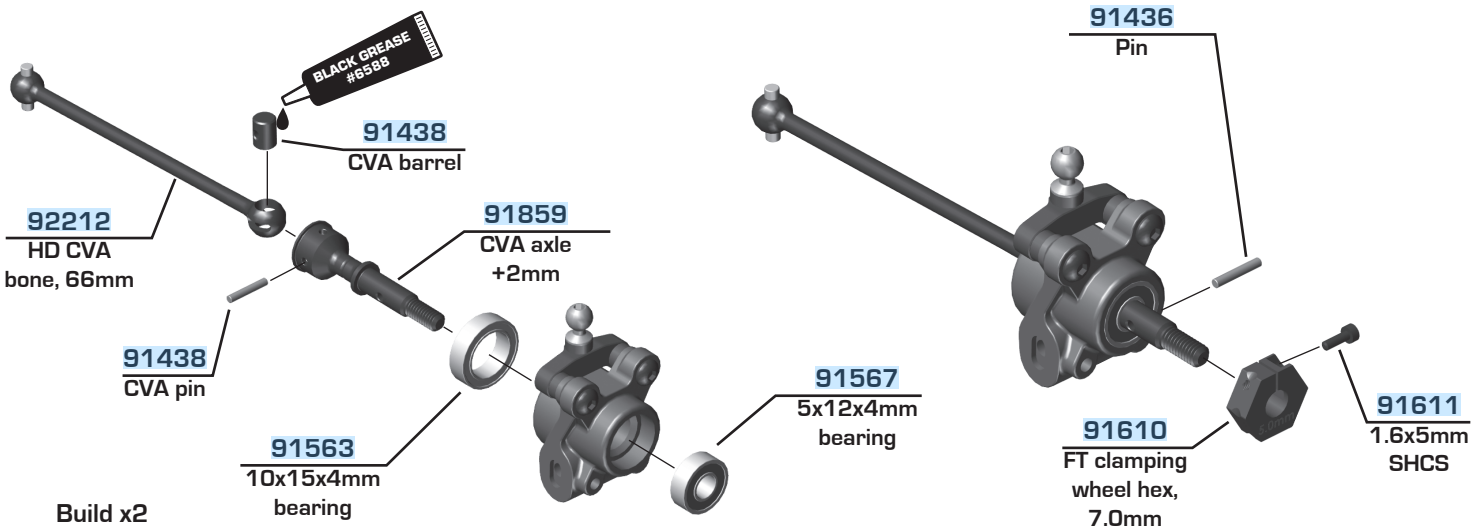

Build x2
(1 left side, 1 right side)

Bag 7 - Step 3

Rear Axle Height		
	0 3	+3mm
	1 2	+2mm
	1 2	+1mm
	0 3	+0mm

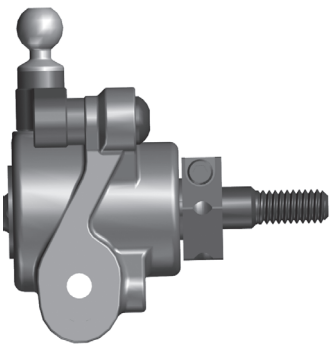

Build x2
(1 left side, 1 right side)

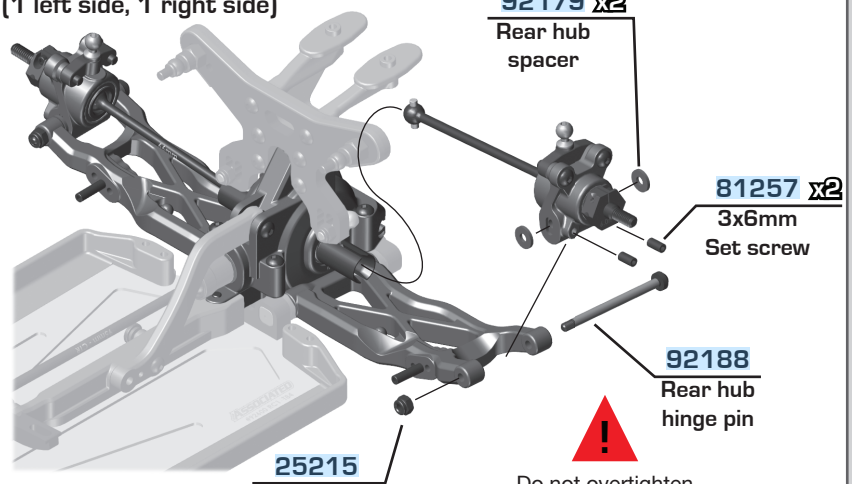

Bag 8 - Step 1

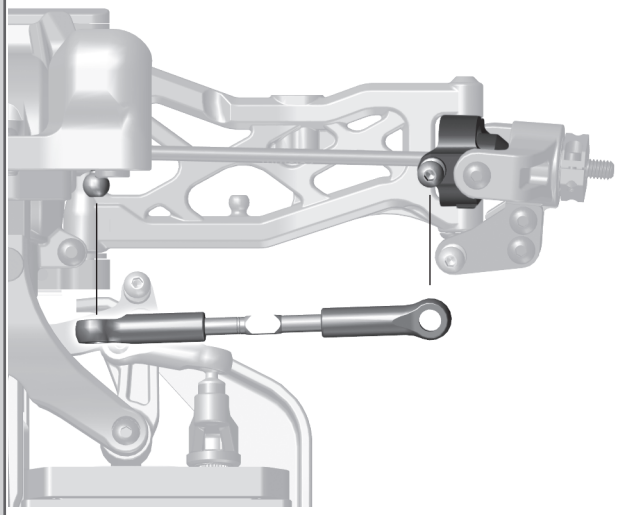

92308 x2
Ballcup, straight

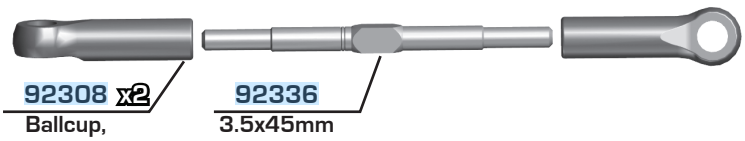

92336
3.5x45mm turnbuckle

92558
FT Titanium turnbuckle set

92348
FT Titanium turnbuckle 3.5x45mm

Orient the notch to the left throughout the car. It indicates which end has the left hand threads!

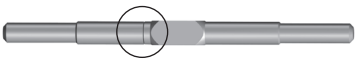

Note:
All turnbuckle inner measurements are approximate.

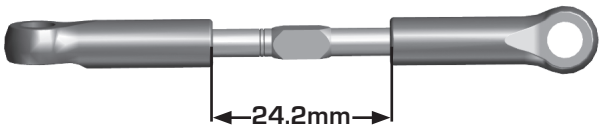

Build x2 (1 left side, 1 right side)

Bag 8 - Step 2

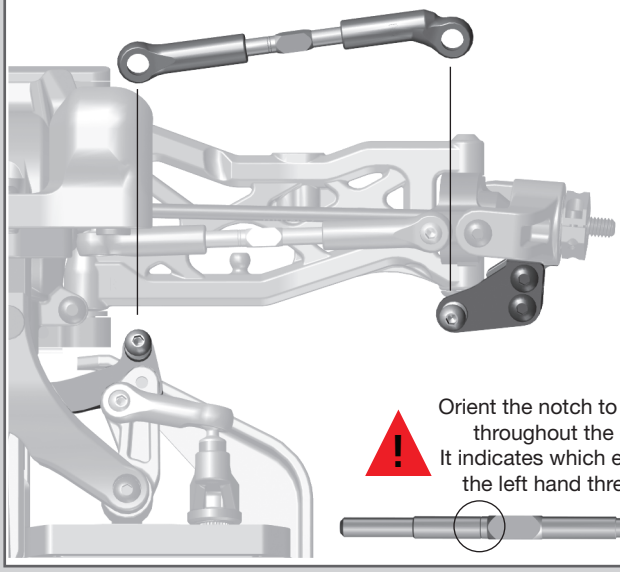

92308
Ballcup, straight

92336
3.5x45mm turnbuckle

92308
Ballcup, Offset

92558
FT Titanium turnbuckle set

92348
FT Titanium turnbuckle 3.5x45mm

Left

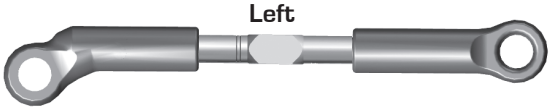

Right

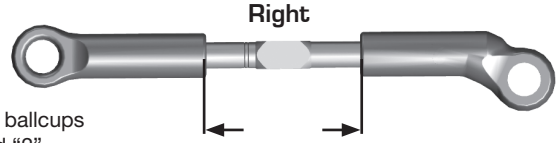

Orient the notch to the left throughout the car. It indicates which end has the left hand threads!

There is two offset ballcups labeled “1” and “2”. The ballcup labeled “1” goes on the left side of the car.

Build x2 (1 left side, 1 right side)

Bag 8 - Step 3

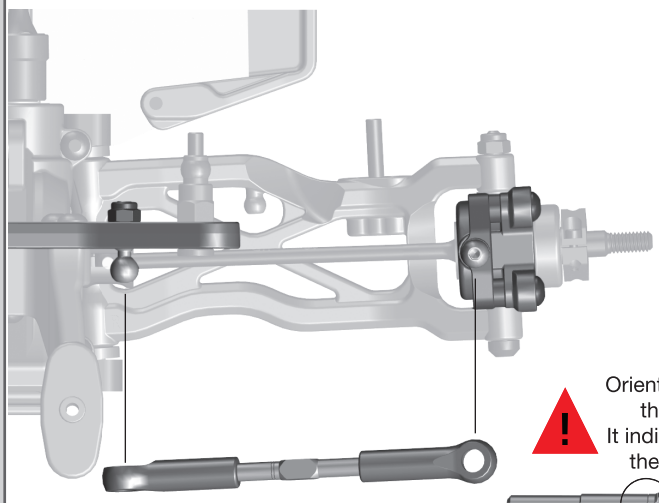

92308 x2
Ballcup, straight



92337
3.5x48mm turnbuckle

92558
FT Titanium turnbuckle set

92349
FT Titanium turnbuckle 3.5x48mm

Orient the notch to the left throughout the car. It indicates which end has the left hand threads!

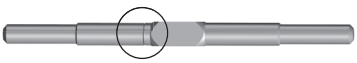



Build x2 (1 left side, 1 right side)

Bag 9 - Step 1

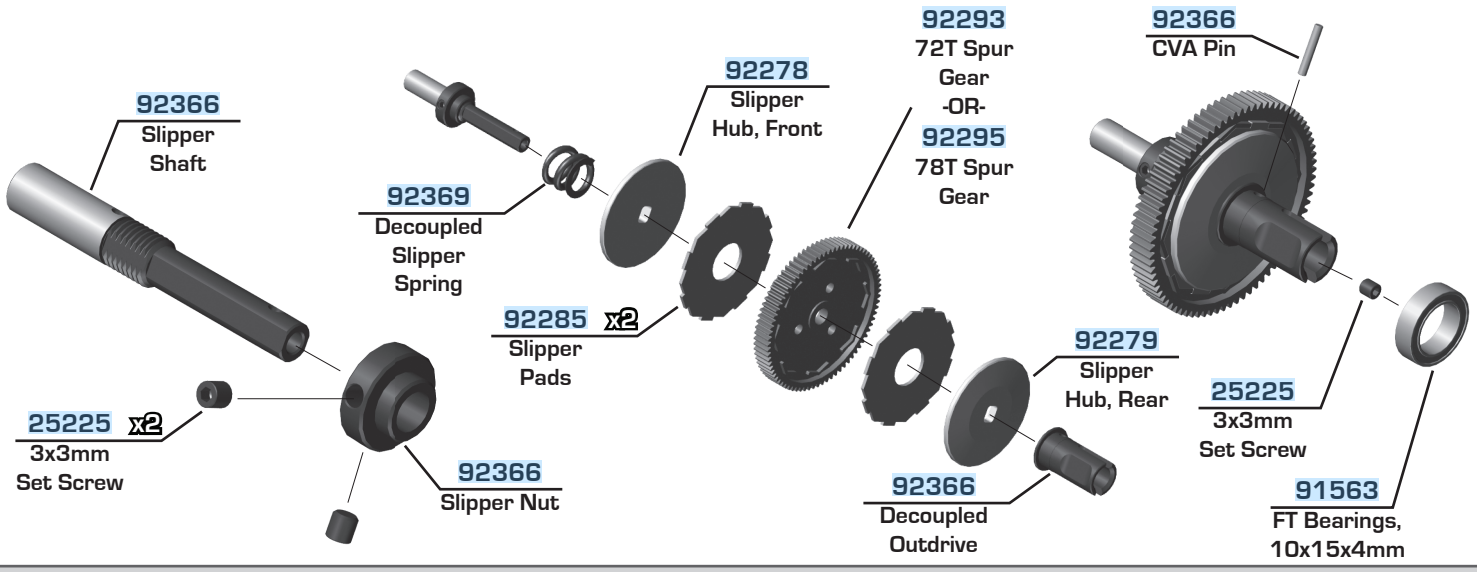

Bag 9 - Step 2

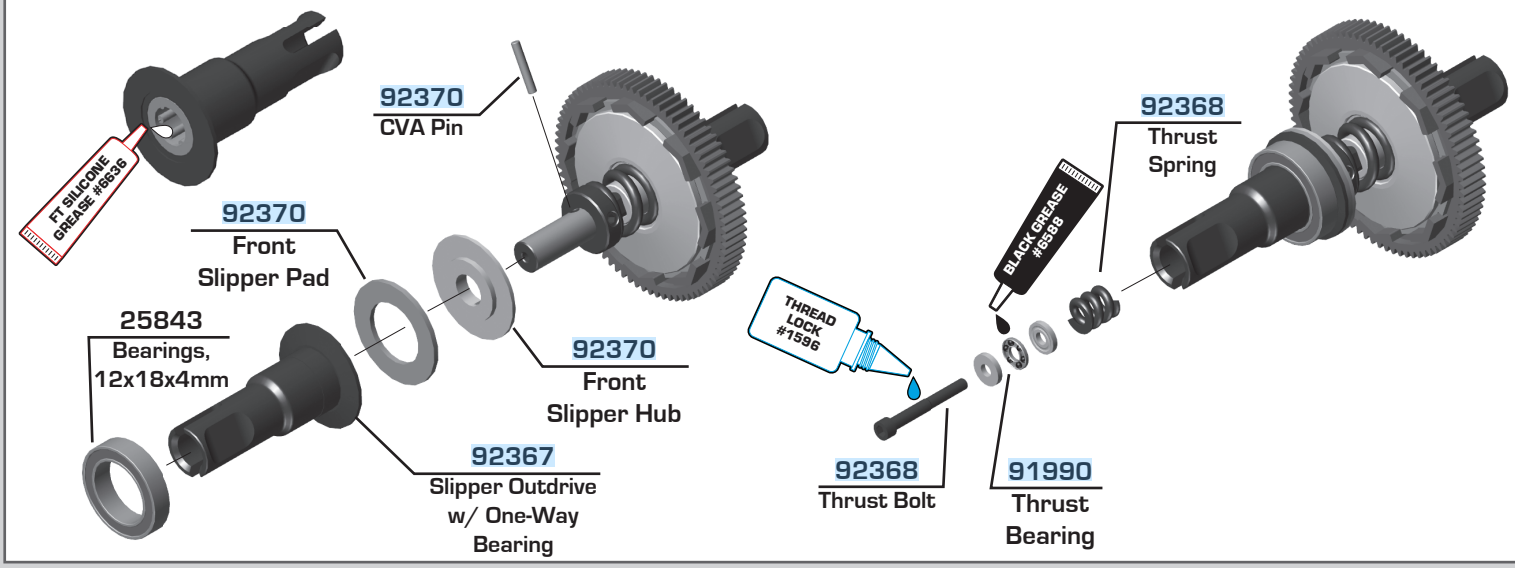

Bag 9 - Step 3

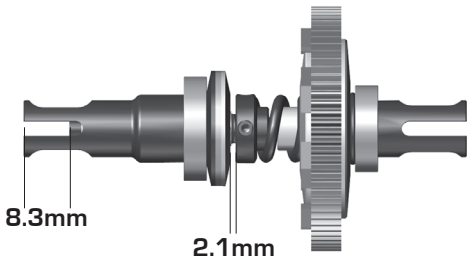

Spur gear direction has a cutout to fit over the slipper housing

Note:
Two additional 3x8mm BHCS included for center bulkhead brace if not running fan mount.

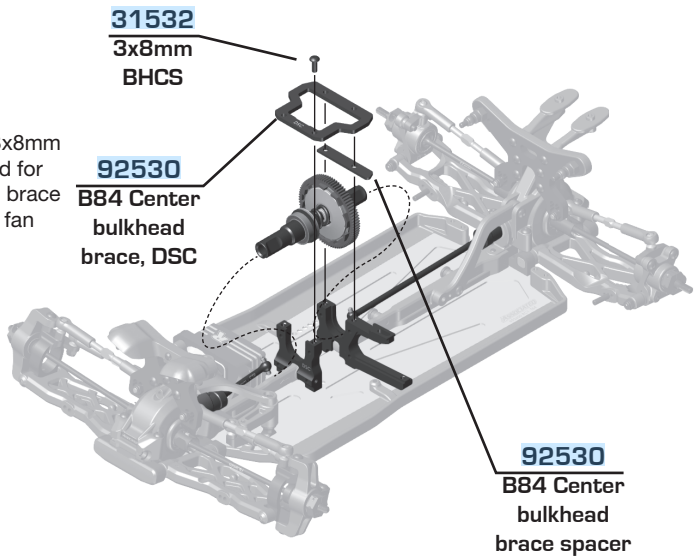

Bag 10 - Step 1

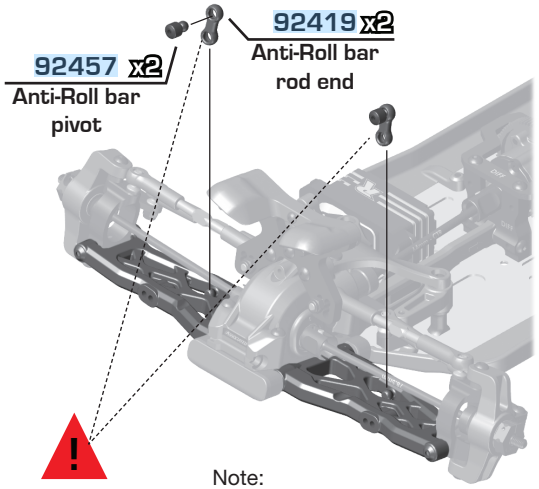

Note:
The anti-roll bar rod end should be perpendicular to the suspension arm when assembled.

Note: Orient the set screws in the same location on left and right side.

Note: Leave some side to side movement when setting the anti-roll bar collars. The anti-roll bar should not bind the suspension

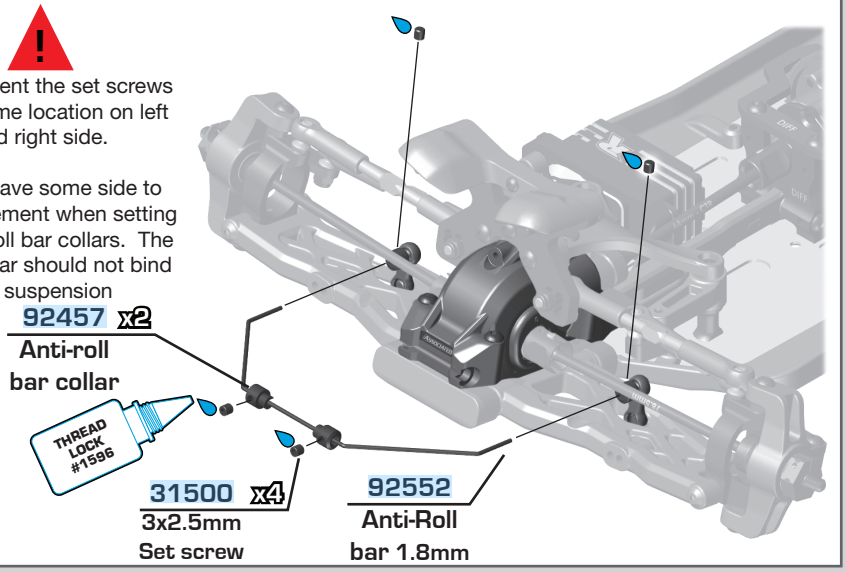

Bag 10 - Step 2

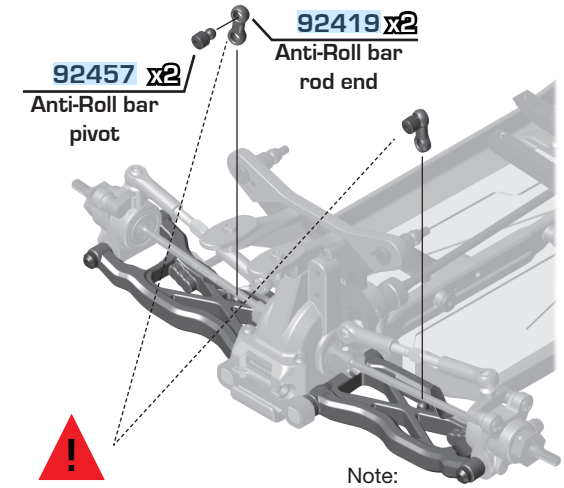

Note:
The anti-roll bar rod end should be perpendicular to the suspension arm when assembled. This may require flipping the anti-roll bar pivot or adjusting it on the bar to achieve the correct setting depending on arm position.

Note: Orient the set screws in the same location on left and right side.

Note: Leave some side to side movement when setting the anti-roll bar collars. The anti-roll bar should not bind the suspension

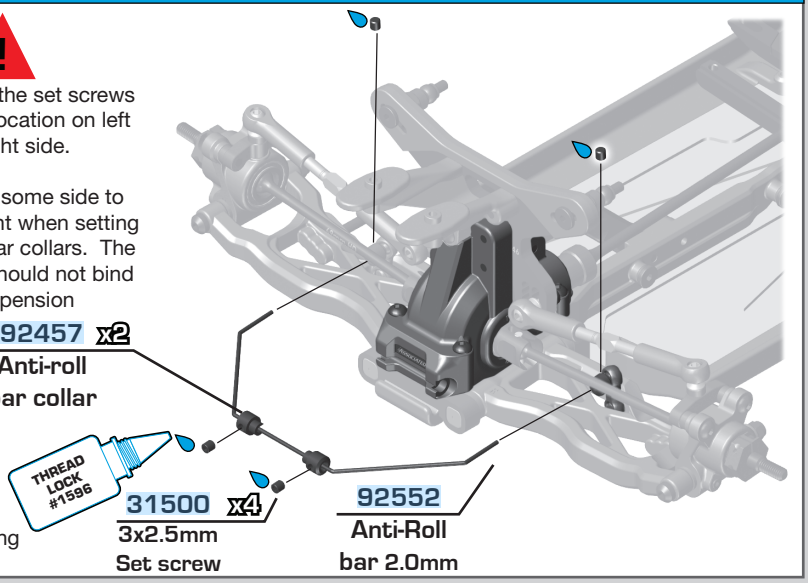

Bag 11 - Step 1

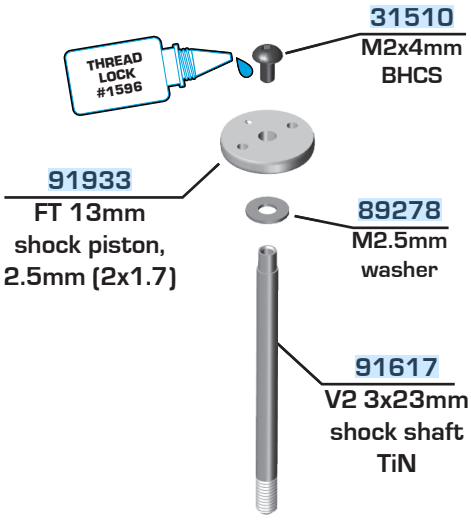

Build x2 front shocks

Mount the shock pistons with the number facing up!



Racers Tip:

Use a marker over the numbers on the pistons to make them easily visible!

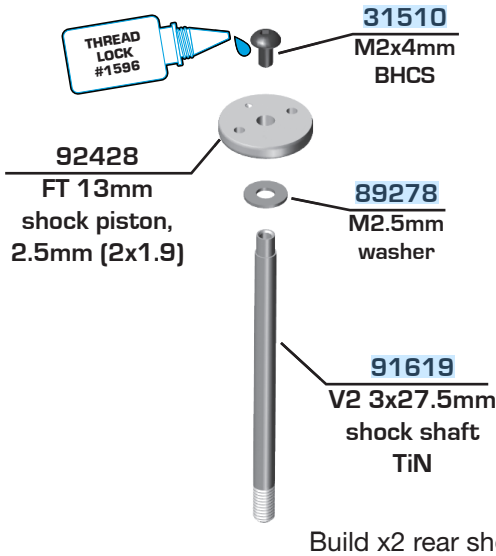

Build x2 rear shocks

Bag 11 - Step 2

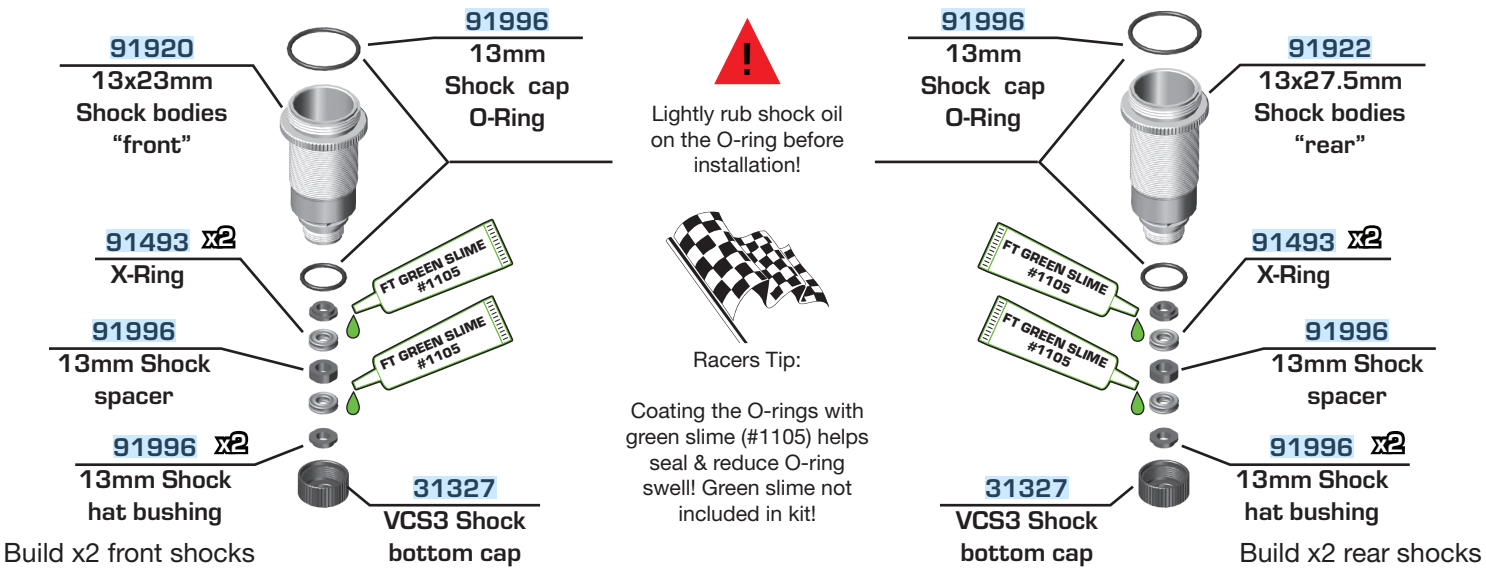

Bag 11 - Step 3

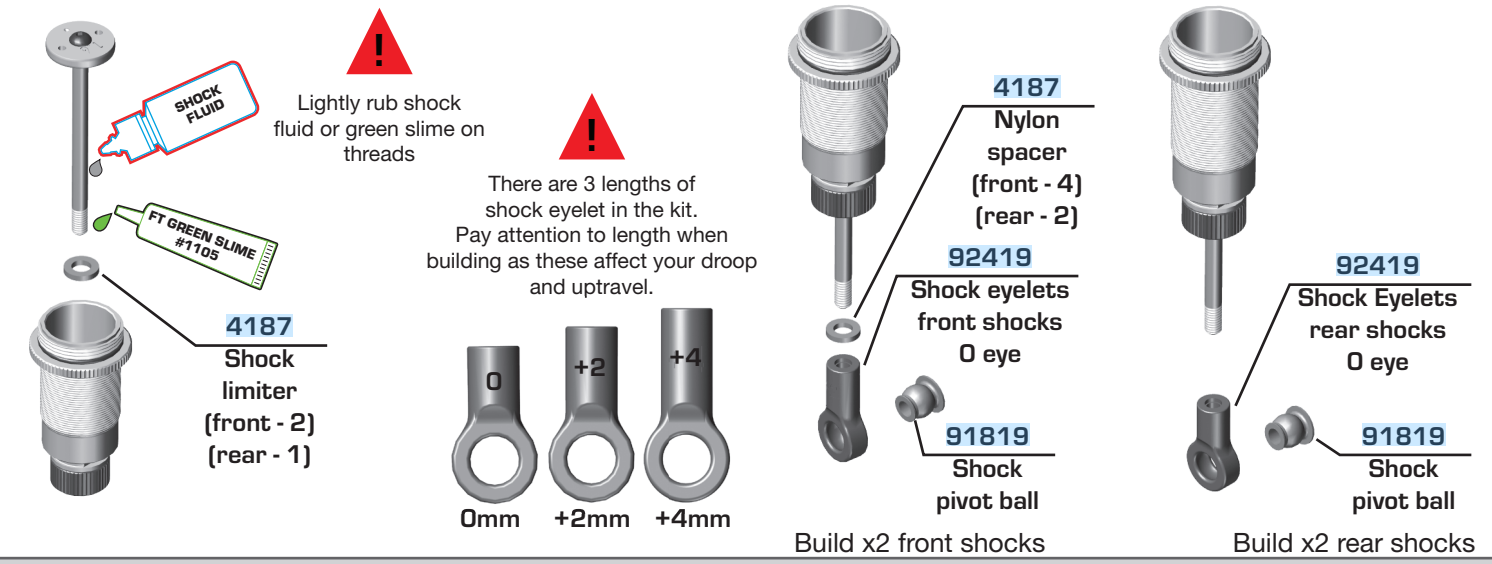

Bag 11 - Step 4

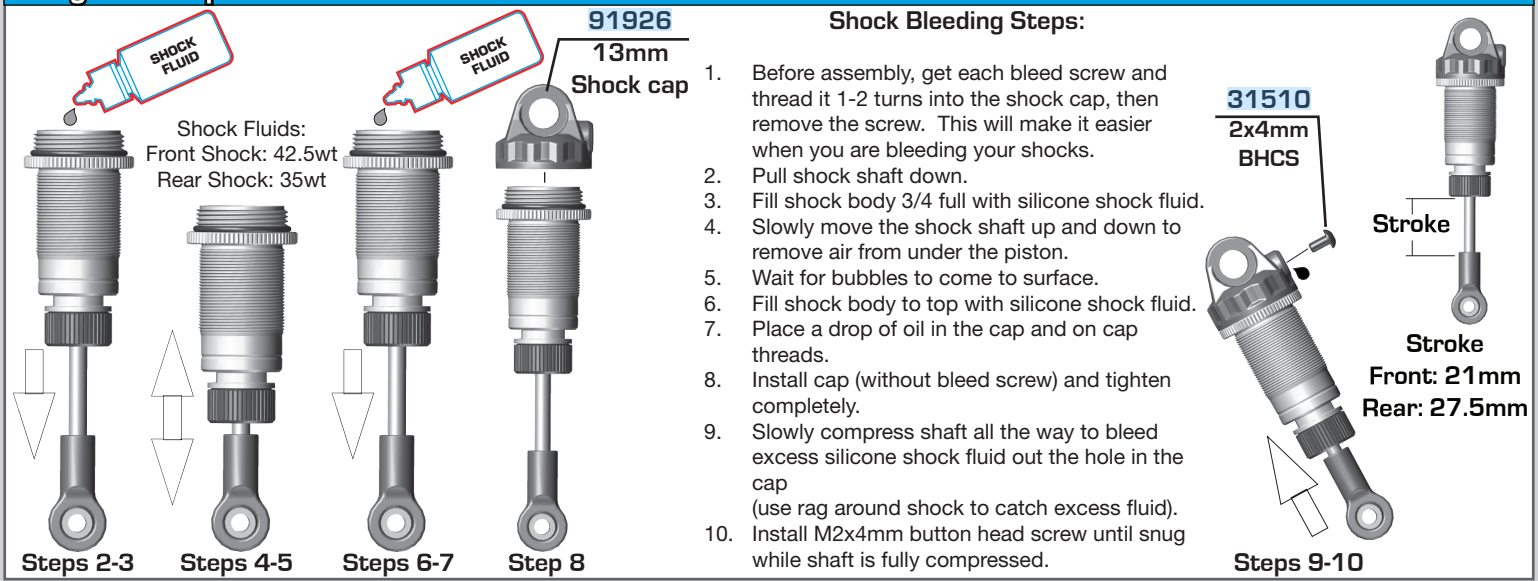

Shock Bleeding Steps:

1. Before assembly, get each bleed screw and thread it 1-2 turns into the shock cap, then remove the screw. This will make it easier when you are bleeding your shocks.
2. Pull shock shaft down.
3. Fill shock body 3/4 full with silicone shock fluid.
4. Slowly move the shock shaft up and down to remove air from under the piston.
5. Wait for bubbles to come to surface.
6. Fill shock body to top with silicone shock fluid.
7. Place a drop of oil in the cap and on cap threads.
8. Install cap (without bleed screw) and tighten completely.
9. Slowly compress shaft all the way to bleed excess silicone shock fluid out the hole in the cap
(use rag around shock to catch excess fluid).
10. Install M2x4mm button head screw until snug while shaft is fully compressed.

Bag 11 - Step 5

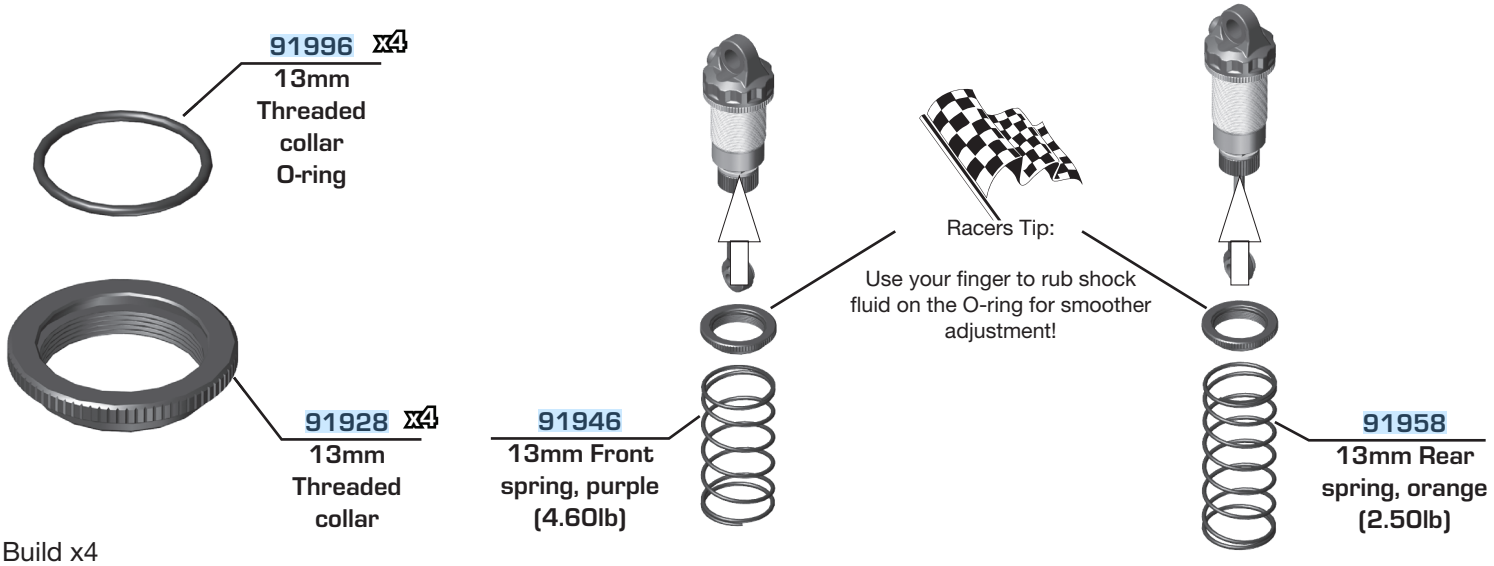

Build x4

Bag 11 - Step 6

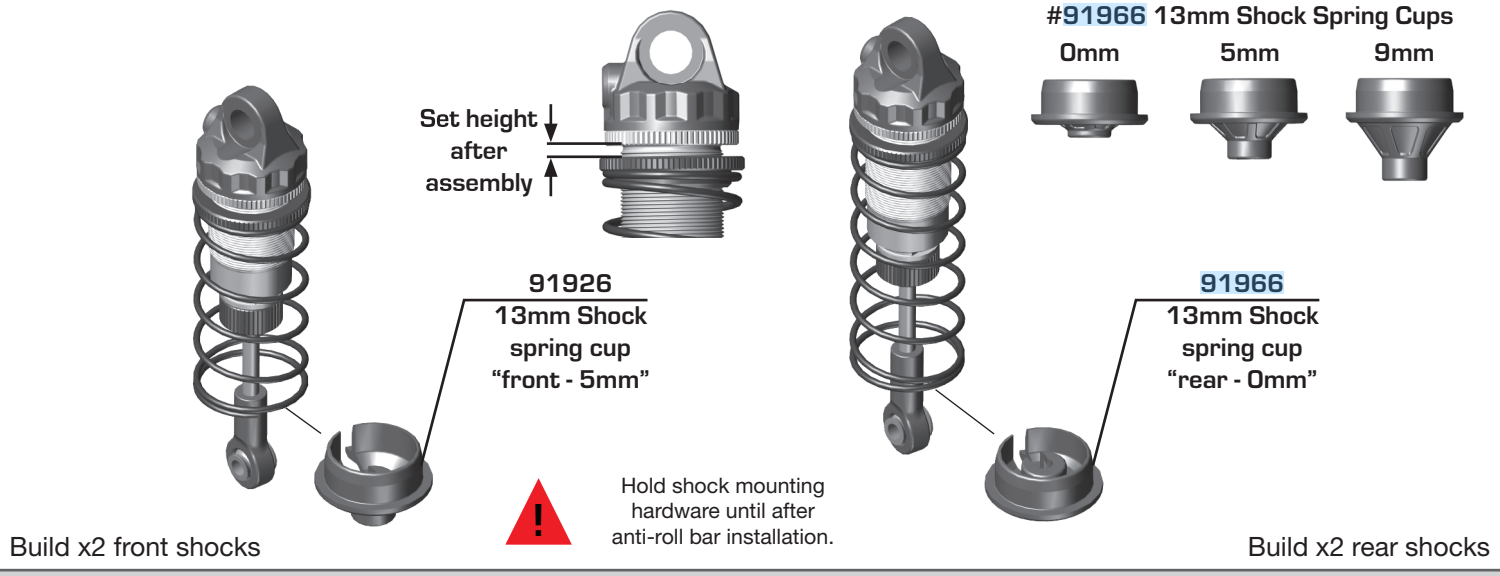

Build x2 front shocks

Build x2 rear shocks

Bag 11 - Step 7

Install x2 front and x2 rear shocks

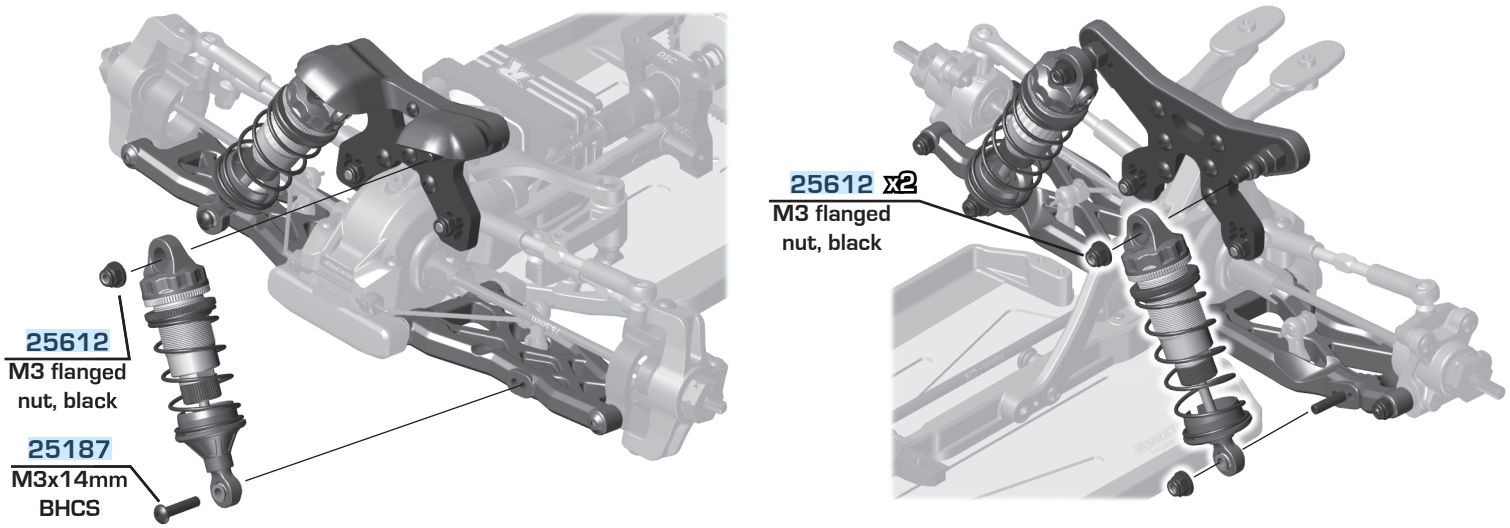

Bag 12 - Step 1

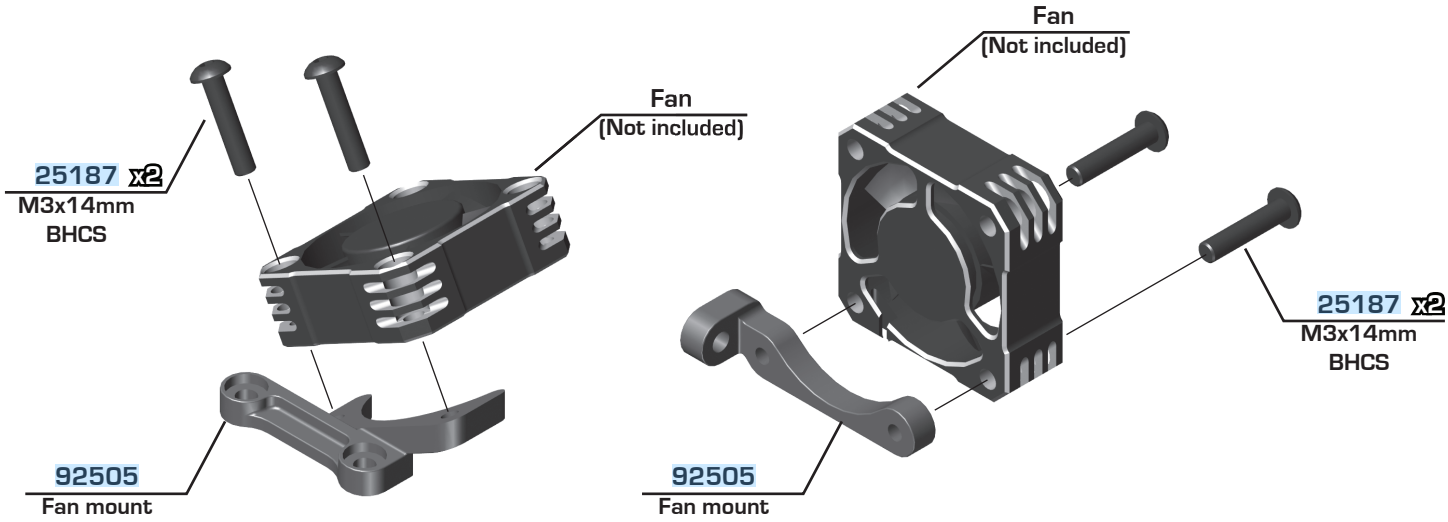

Bag 12 - Step 2

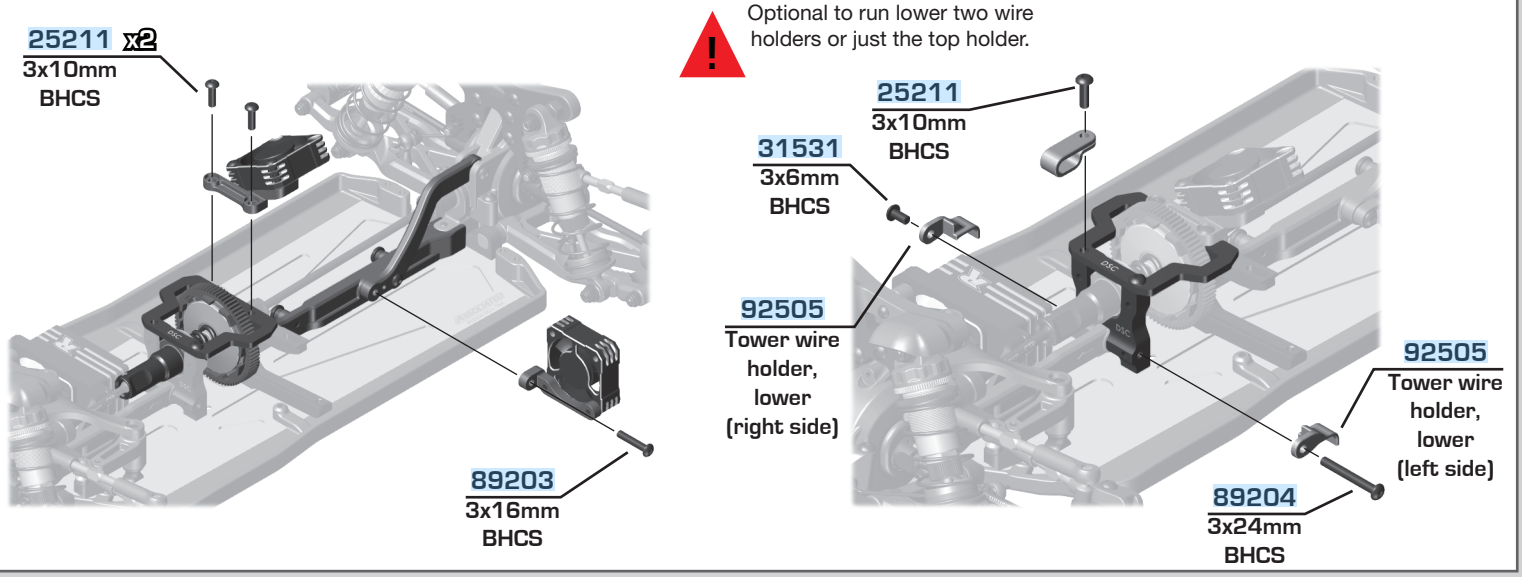

Bag 12 - Step 3

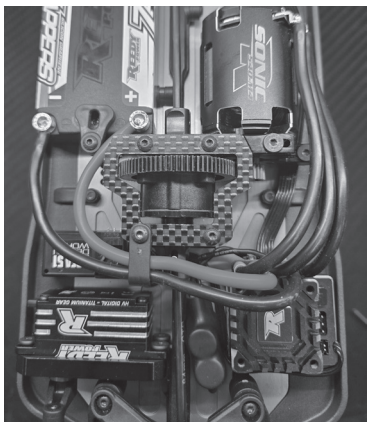

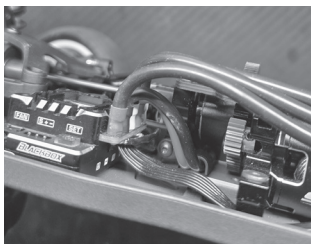

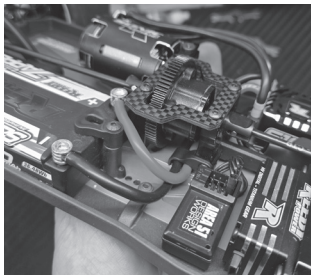

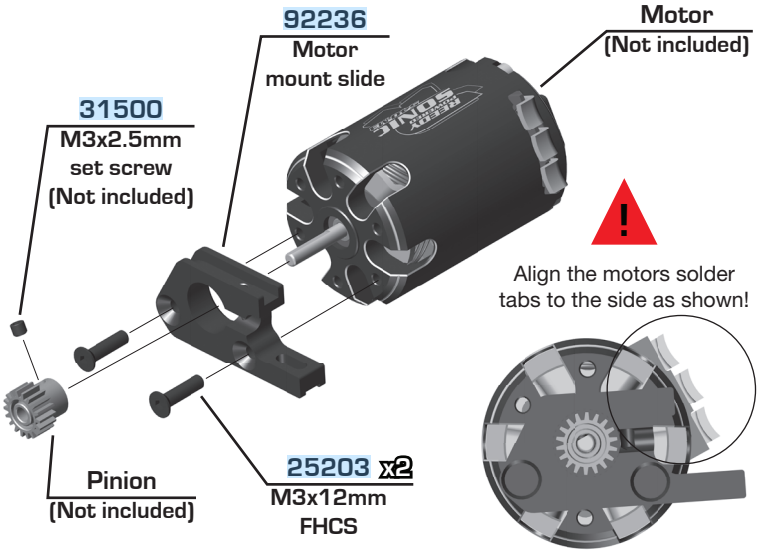

Bag 12 - Step 4

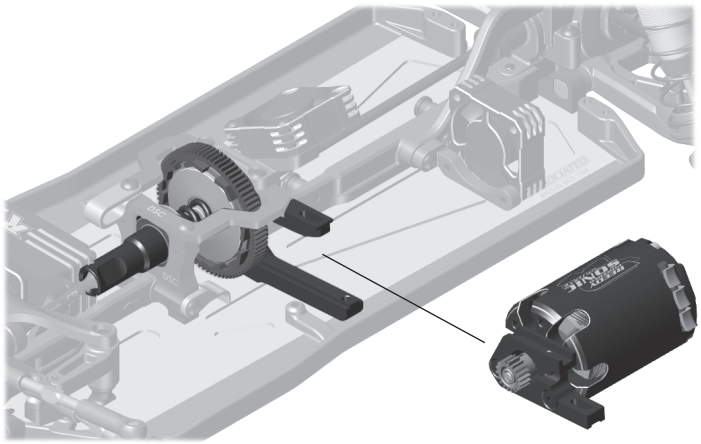

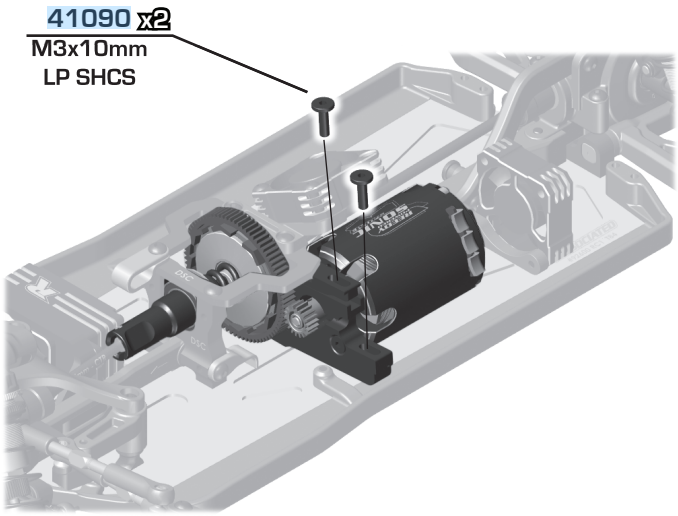

Bag 12 - Step 5

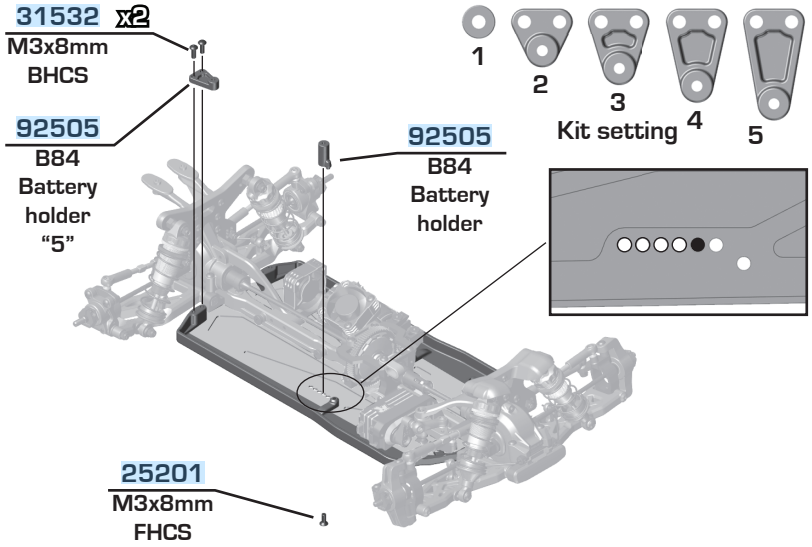

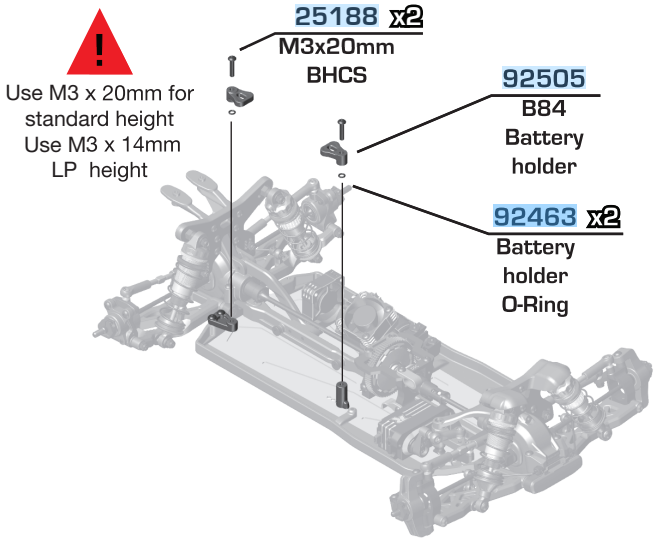

Bag 12 - Step 6

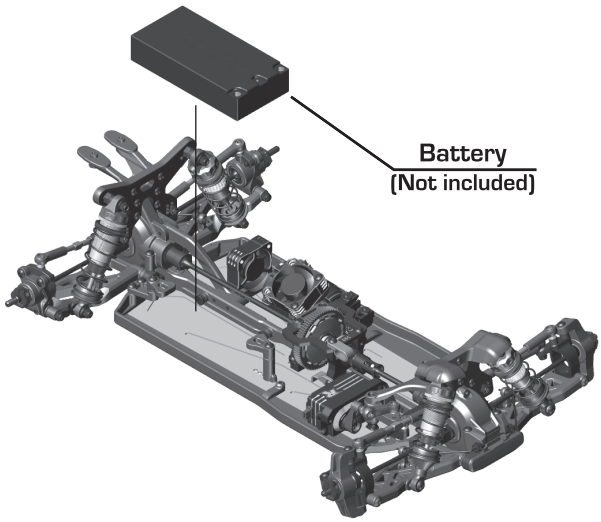



Bag 12 - Step 7

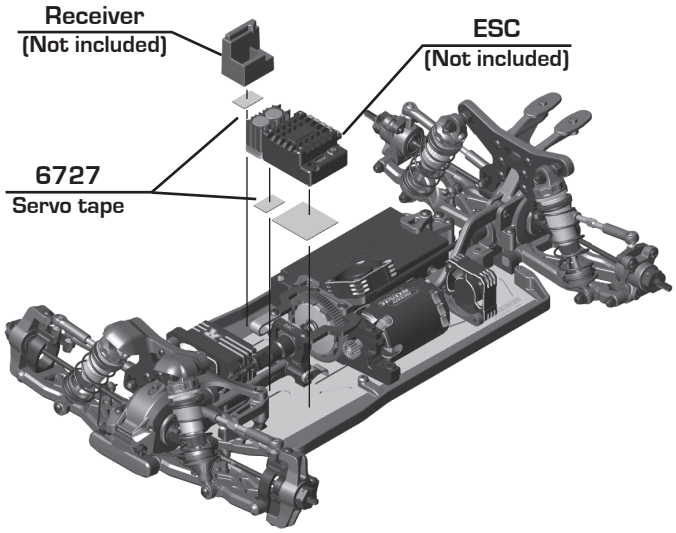

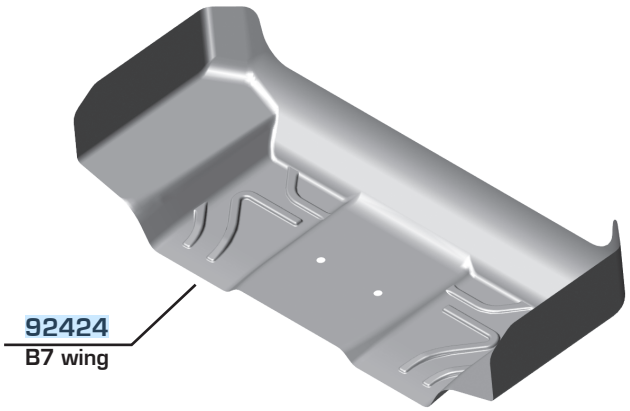

Bag 12 - Step 8

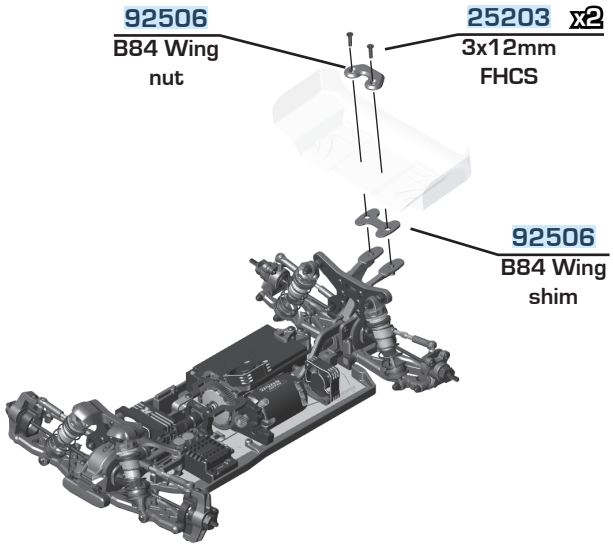

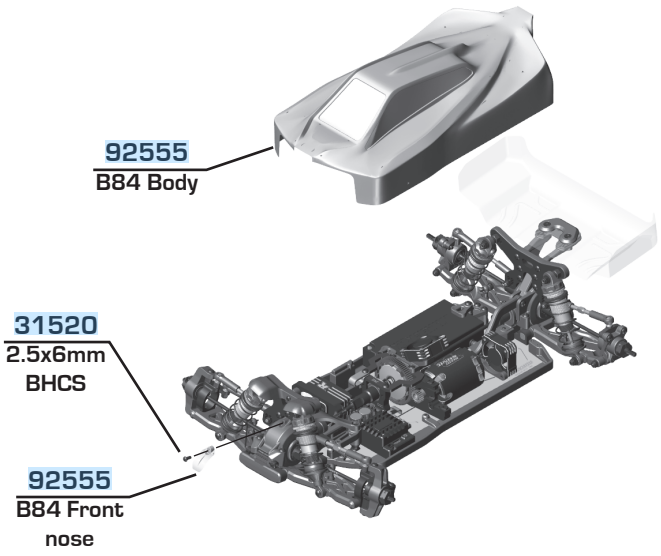

Bag 12 - Step 9

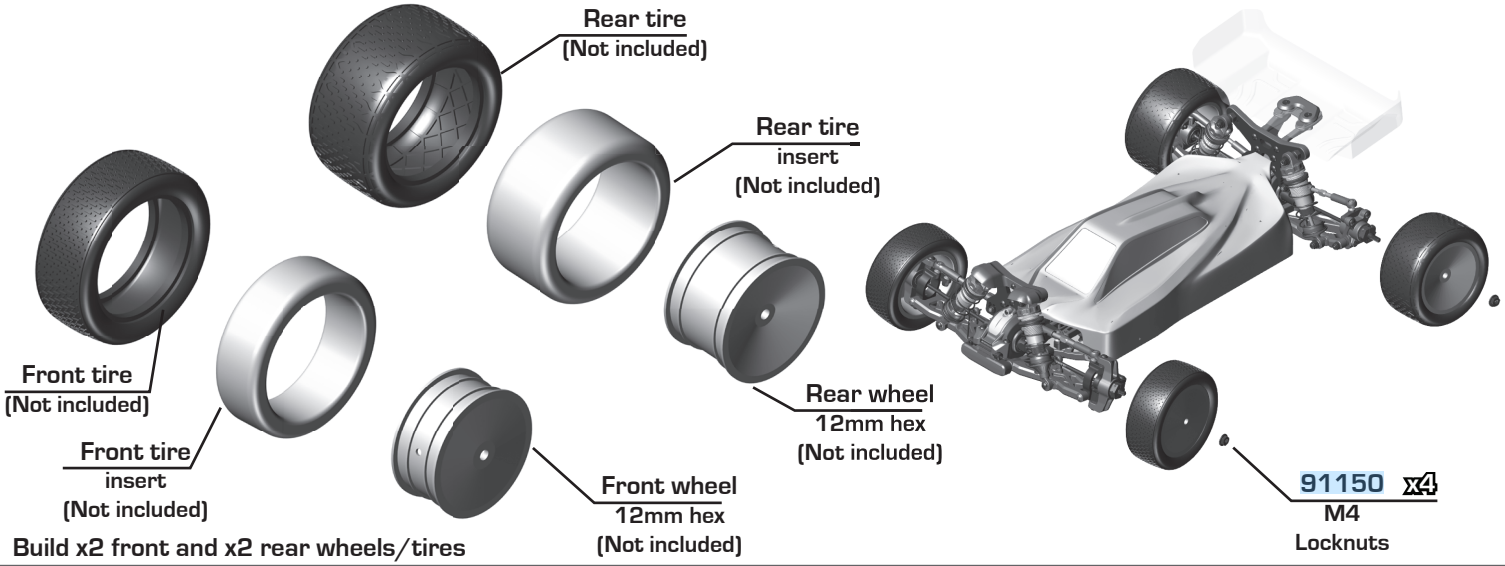

Build x2 front and x2 rear wheels/tires

:: Tuning Tips - Front Arm Mount Pill Insert Setups

Standard Position

Use this position as a reference when changing pill locations.

Kick-up: 10°
Roll Center: +0
Pin Width: +0

A Mount



B Mount



Possible Insert Locations

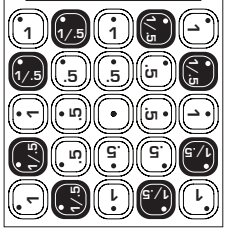

Insert Hole Locations



Number indicates degree of change: 0.5°,1.0°, 0° (center dot)

Hole 0.5° or 0.35mm from center

Hole 1.0° or 0.7mm from center

The aluminum front arm mounts utilize eccentric pill inserts to make fine adjustments to kick-up, pin height, and pin width. Adjustments can be made using the supplied inserts (#92014)

Pin Width

More distance = wider pivot
Less distance = narrower pivot

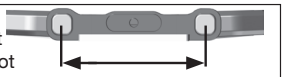

A Mount	B Mount	
		= +1.4mm
		= +0.7mm
		= 0mm
		= -0.7mm
		= -1.4mm

Pin Height

Higher pin = Higher roll center
Lower Pin = Lower roll center

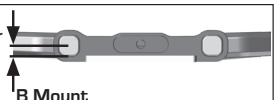

A Mount	B Mount	
		= +0.7mm
		= +0.35mm
		= 0mm
		= -0.35mm
		= -0.7mm

Kick Up

More angle = More kick up
Less angle = Less kick up

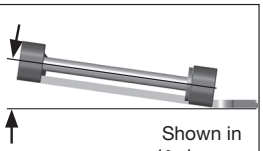

Shown in 1° changes

A Mount	B Mount	
		= 10°
		= 9°
		= 8°
		= 11°
		= 10°
		= 9°
		= 12°
		= 11°
		= 10°

Total Caster Angle

Total caster angle is the sum of the kick up angle and the caster block angle.

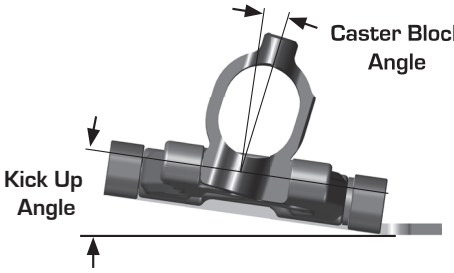

Caster Block Angle	Kick Up Angle 8°	9°	10°	11°
6°	14°	15°	16°	17°
7°	15°	16°	17°	18°
8°	16°	17°	18°	19°
9°	17°	18°	19°	20°
10°	18°	19°	20°	21°

:: Tuning Tips - Rear Arm Mount Pill Insert Setups

Standard Position

Use this position as a reference when changing pill locations.

Toe: 3°
Anti-Squat: 2°
Roll Center: +0
Pin Width: +0

C Mount



D Mount



Possible Insert Locations

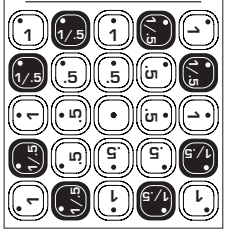

Insert Hole Locations

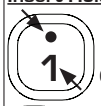

Number indicates degree of change: 0.5°,1.0°, 0° (center dot)

Hole 0.5° or 0.35mm from center

Hole 1.0° or 0.7mm from center

The aluminum front arm mounts utilize eccentric pill inserts to make fine adjustments to kick-up, pin height, and pin width. Adjustments can be made using the supplied inserts (#92014)

Pin Width

More distance = wider pivot
Less distance = narrower pivot

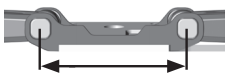

C Mount	D Mount	
		= +1.4mm
		= +0.7mm
		= 0mm
		= -0.7mm
		= -1.4mm

Pin Height

Higher pin = Higher roll center
Lower Pin = Lower roll center

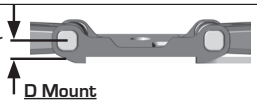

C Mount	D Mount	
		= +0.7mm
		= +0.35mm
		= 0mm
		= -0.35mm
		= -0.7mm

Anti-Squat Angle

More angle = More anti-squat
Less angle = Less anti-squat

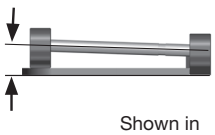

Shown in 1° changes

C Mount	D Mount	
		= 2°
		= 1°
		= 0°
		= 3°
		= 2°
		= 1°
		= 4°
		= 3°
		= 2°

Toe Angle

More angle = More toe in
Less angle = Less toe in
Shown in 1° changes

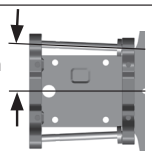

C Mount	D Mount	
		= 3°
		= 4°
		= 5°
		= 2°
		= 3°
		= 4°
		= 1°
		= 2°
		= 3°

RC10 B84.1 TEAM KIT

RC10 B84.1D TEAM KIT

Driver: Kit - Carpet | Event: | Qualify: | Main:

Date: | Track: | Finish: | Best Lap Time:

Front Suspension:

Ride Height:	11mm
Camber:	-1 deg
Toe:	0 deg
Anti-Roll Bar:	1.8mm
Arm Type:	73mm
Tower Type:	73mm Arm Tower
Wheelbase Shim:	Arm Middle
Wheel Hex:	5mm
Steering Block Type:	B74
Caster Block:	-2° ☐ -1° ■ 0° ☐ +1° ☐ +2° ☐
Chassis Brace Material:	Kit
Top Plate Brace Material:	Kit
Front Axles:	CVA ■ DCV ☐
Notes:	T84 A and B Mount

Lower Brace Type: Fixed ☐ Pivot ■





Ball Stud Spacing: 2mm

Arm Mount A: 1° ☐ 0 .5° ☐

Gray ■ Black ☐

Shims: 0.7mm A Mount Shim



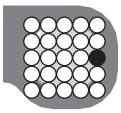

Arm Mount B: 1° ☐ 0 .5° ☐

Gray ■ Black ☐

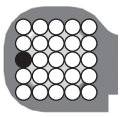

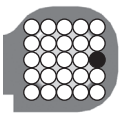

Diff Height:

+3	☐
+2	☐
+1	☐
+0	■



Axle Height: +3 ■ +2 ☐ +1 ☐ 0 ☐

Ball Stud Spacing: 0mm

Steering Plate: +2

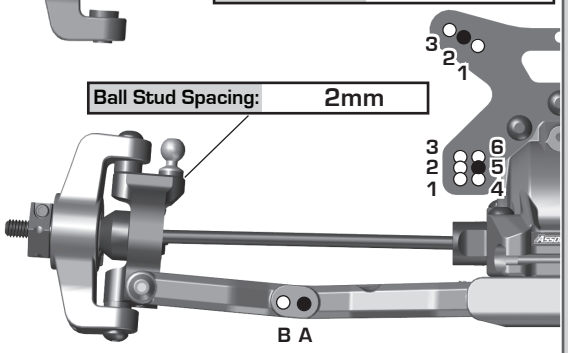

Rear Suspension:

Ride Height:	11mm
Camber:	-1 deg
Anti-Roll Bar:	2.0mm
Arm Type:	Kit - B7
Tower Type:	Kit
Wheelbase Shim:	Arm Middle
Wheel Hex:	7mm
Hub Type:	Kit - B7 HRC
Drive Shaft Type:	66mm Bone
Chassis Brace Material:	Kit
Upper Chassis Brace Material:	Kit
Hub Spacing:	Fwd ☐ Mid ■ Back ☐
Notes:	

Lower Brace Type: Fixed ☐ Pivot ■



Rear Chassis Brace Screws:

Arm Mount C: 1° ■ 0 .5° ☐

Gray ■ Black ☐

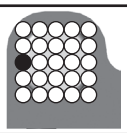

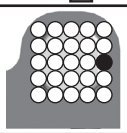

Arm Mount D: 1° ■ 0 .5° ☐

Gray ■ Black ☐

Shims:

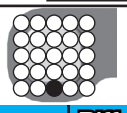



Axle Height:

▼0	3▲	+3
▼1	2▲	+2
▲1	2▼	+1
▲0	3▼	+0

Diff Height:

+3	■
+2	☐
+1	☐
+0	☐

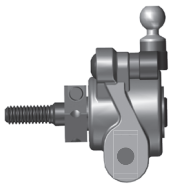

Gearbox: Standard ☐ +2 ■

Electronics:

Radio:		Servo:	
EPA:	Throttle: %	Brake:	%
ESC:			
ESC Settings:			
Motor / Wind:		Timing:	
Pinion:		Spur:	

Motor Position: Forward: ■ Back: ☐

Battery Position:

Back 1 ☐ 2 ☐ 3 ☐ 4 ☐ 5 ■ Forward

Battery: | Weight:

Notes:

Differential:

	Front	Center	Rear
Fluid:	30K		100K
Gears:	LTC		LTC
Type:	Metal		Metal

Notes:

Slipper Clutch:

Type:

# of Pads:

Setting:

Notes:

Shocks:

	Front	Rear
Piston:	2x1.7	2x1.9
Thickness:	2.5mm	2.5mm
Fluid:	42.5wt	35wt
Spring:	Purple	Orange
Limiters:	Int: 2 Ext: 4	Int: 1 Ext: 2
Stroke:	21mm	27.5mm
Eyelet:	0	0
Cup Offset:	0 ☐ +5 ■ +9 ☐	0 ■ +5 ☐ +9 ☐

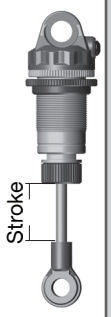

Kashima Bodies: ☐ Chrome Shafts: ☐ Machined Spacers: ☐

Notes:

Track Info:

Size:

Surface:

Traction:

Moisture:

Condition:

Temperature:

Notes:

Tires:

Front Tires:

Front Compound:

Front Insert:

Rear Tires:

Rear Compound:

Rear Insert:

Wheel (F/R):

Notes:

Body, Weight:

Body:	B84
Front Wing:	Nose
Rear Wing:	B7
Rear Wing Mount:	0 ☐ -2 ■
Wing Angle:	0° ☐ 3° ☐ 6° ■
Chassis:	T84
Total Vehicle Weight:	
Notes:	

Vehicle Comments:

Notes:

:: For more setups, visit https://www.associatedelectrics.com/teamassociated/manuals_and_setup_sheets/

RC10 B84.1 TEAM KIT

RC10 B84.1D TEAM KIT

Driver: _____ Event: _____ Qualify: _____ Main: _____

Date: _____ Track: _____ Finish: _____ Best Lap Time: _____

Front Suspension:

Ride Height:
Camber:
Toe:
Anti-Roll Bar:
Arm Type:
Tower Type:
Wheelbase Shim:
Wheel Hex:
Steering Block Type:
Caster Block: -2° ☐ -1° ☐ 0° ☐ +1° ☐ +2° ☐
Chassis Brace Material:
Top Plate Brace Material:
Front Axles: CVA ☐ DCV ☐
Notes:

Lower Brace Type: Fixed ☐ Pivot ☐



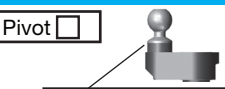

Ball Stud Spacing:

Arm Mount A: 1° ☐ 0.5° ☐
Gray ☐ Black ☐
Shims: _____

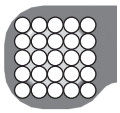

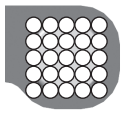

Arm Mount B: 1° ☐ 0.5° ☐
Gray ☐ Black ☐

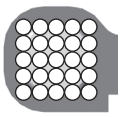

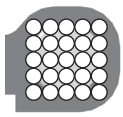

Diff Height:
+3 ☐
+2 ☐
+1 ☐
+0 ☐



Axle Height:
+3 ☐ +2 ☐ +1 ☐ 0 ☐

Ball Stud Spacing:

Steering Plate:

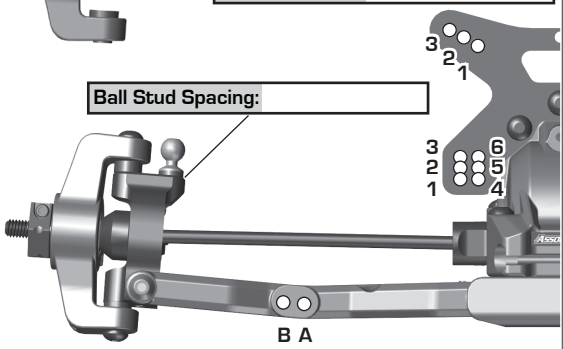

Rear Suspension:

Ride Height:
Camber:
Anti-Roll Bar:
Arm Type:
Tower Type:
Wheelbase Shim:
Wheel Hex:
Hub Type:
Drive Shaft Type:
Chassis Brace Material:
Upper Chassis Brace Material:
Hub Spacing: Fwd ☐ Mid ☐ Back ☐
Notes:

Lower Brace Type: Fixed ☐ Pivot ☐



Rear Chassis Brace Screws:

Arm Mount C: 1° ☐ 0.5° ☐
Gray ☐ Black ☐

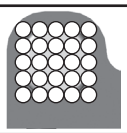

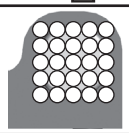

Arm Mount D: 1° ☐ 0.5° ☐
Gray ☐ Black ☐
Shims: _____

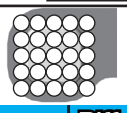



Axle Height:

▼0	3▲	+3
▼1	2▲	+2
▲1	2▼	+1
▲0	3▼	+0

Diff Height:
+3 ☐
+2 ☐
+1 ☐
+0 ☐

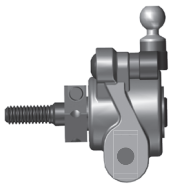

Gearbox:
Standard ☐
+2 ☐

Electronics:

Radio: _____ Servo: _____
EPA: Throttle: % Brake: %
ESC:
ESC Settings:
Motor / Wind: _____ Timing:
Pinion: _____ Spur: _____
Motor Position: Forward: ☐ Back: ☐
Battery Position:
Back 1 ☐ 2 ☐ 3 ☐ 4 ☐ 5 ☐ Forward
Battery: _____ Weight: _____
Notes:

Differential:

	Front	Center	Rear
Fluid:			
Gears:			
Type:			

Notes:

Slipper Clutch:

Type:
# of Pads:
Setting:
Notes:

Shocks:

	Front	Rear
Piston:		
Thickness:		
Fluid:		
Spring:		
Limiters:	Int: ____ Ext: ____	Int: ____ Ext: ____
Stroke:		
Eyelet:		
Cup Offset:	0 ☐ +5 ☐ +9 ☐	0 ☐ +5 ☐ +9 ☐



Kashima Bodies: ☐ Chrome Shafts: ☐ Machined Spacers: ☐
Notes:

Track Info:

Size:
Surface:
Traction:
Moisture:
Condition: _____
Temperature:
Notes:

Tires:

Front Tires:
Front Compound:
Front Insert:
Rear Tires:
Rear Compound:
Rear Insert:
Wheel (F/R):
Notes:

Body, Weight:

Body:
Front Wing:
Rear Wing:
Rear Wing Mount: 0 ☐ -2 ☐
Wing Angle: 0° ☐ 3° ☐ 6° ☐
Chassis:
Total Vehicle Weight:
Notes:

Vehicle Comments:

Notes: _____

:: For more setups, visit https://www.associatedelectrics.com/teamassociated/manuals_and_setup_sheets/

ASSOCIATED ELECTRICS
Since 1964

Associated Electrics, Inc.
21062 Bake Parkway Lake Forest, CA 92630 USA

call: (949) 544-7500 - fax: (949) 544-7501

Check out the following web sites for all of our kits, current products, new releases, setup help, tips, and racing info!

www.AssociatedElectrics.com

FOLLOW US ON SOCIAL MEDIA

TeamAssociated ReedyPower ElementRC FactoryTeam51	@TeamAssociatedRC @ReedyPower @Element_RC @FactoryTeam_RC	@Team_Associated @ReedyPower	@Associated_Electrics	TeamAssociatedRC ElementRC	TeamAssociated Reedy Element-rc