

1:10 Scale 2WD Electric Off Road Competition Short Course Kit Manual

#70010 RC10 SC7 Team Kit

WeAreAE

CHAMPIONS by DESIGN

AssociatedElectrics.com

TEAM ASSOCIATED

:: Introduction

Thank you for purchasing this Team Associated product. This assembly manual contains instructions and tips for building and maintaining your new vehicle. Please take a moment to read through the manual and familiarize yourself with the steps. We are continually changing and improving our designs; therefore, actual parts may appear slightly different than the illustrations. New parts will be noted on supplementary sheets located in the appropriate parts bags.
Check each bag for these sheets before you start to build.
Check www.AssociatedElectrics.com for the latest versions of our instruction manuals.

:: RC10SC7 Team Kit Features

- New 3-Gear Laydown Transmission
  - Durable new split case design for secure gear mesh
  - Large 10mm aluminum idler shaft integrates into transmission structure.
  - Added durability and stability of 54 tooth idler with 10x15mm idler bearings
  - Responsive power delivery with reduced lag and lower temps for spec racing
  - Gearbox retrofits B7 buggy
- New Truck Specific gull wing long arm suspension: improves grip and predictability in all conditions
- New updated B7 V2 caster block for added stiffness
- New 0 KPI steering blocks with 3mm and 4mm trail.
- Aluminum front bulkhead and steel hinge pin brace included in front-end design.
- RC10B7 Ball Differential included
- Fit High-Volume B7 Gear Differential: improves consistency of differential action over a longer period. Fits LTC internal gears from the RC10B74.2.
- New low CG 25mm and 31mm length 13mm big-bore shock bodies
- TiN gold 3x24mm and 3x29mm shock shafts
- Included Anti-Roll Bars Front and Rear, accessible design based on RC10B7

:: Additional

Your new Team Kit comes unassembled and requires the following items for completion (refer to www.AssociatedElectrics.com and www.Reedypower.com for suggestions):

- R/C two channel surface frequency radio system
- AA-size batteries for transmitter
- Electronic Speed Control (“ESC”)
- Steering servo
- R/C electric motor (540 size)
- Pinion gear (48P), size determined by type/turn or kV of motor
- Battery charger (a peak detection charger, or LiPo compatible charger)
- 2 cell LiPo battery pack
- Polycarbonate body
- Polycarbonate specific spray paint
- Cyanoacrylate glue (“CA”) (#1597)
- Thread locking compound (#1596)
- Tires and Inserts, Fronts and Rears
- Wheels w/12mm Hex

:: Other Helpful Items

- Silicone Shock Fluid (Refer to AssociatedElectrics.com for complete listings)
- Green Slime shock lube (#1105)
- FT Turnbuckle Wrench, 4mm (#1112)
- FT Body Reamer (#1499)
- Shock Pliers (#1681)
- Wire Cutters
- FT Hex/Nut Wrenches (#1519)
- FT Ballcup Wrench (#1579)
- Hobby Knife
- Needle Nose Pliers
- FT Universal Tire Balancer (#1498)
- Calipers or a Precision Ruler
- FT Body Scissors (#1737)
- Soldering Iron

Associated Electrics, Inc.
21062 Bake Parkway.
Lake Forest, CA 92630

ASSOCIATED ELECTRICS
Since 1984

Customer Service
Tel: 949.544.7500
Fax: 949.544.7501

http://www.AssociatedElectrics.com • http://www.instagram.com/teamassociatedrc/ • http://www.facebook.com/TeamAssociated/

:: Hardware - 1:1 Scale View

Button Head (bhcs)

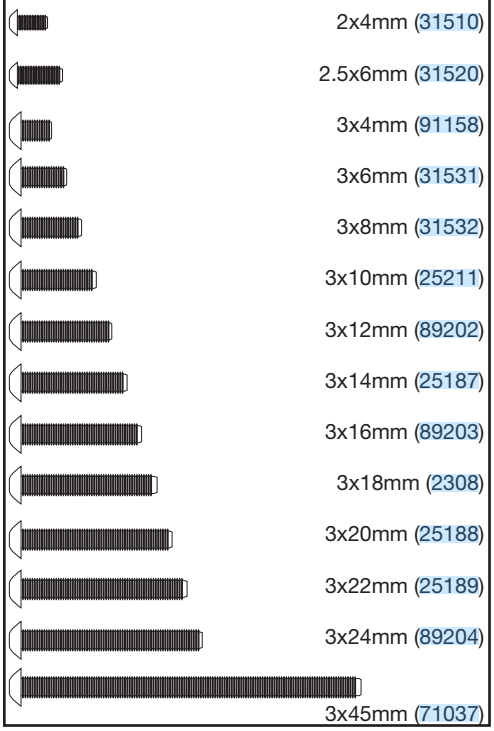

2x4mm (31510)
2.5x6mm (31520)
3x4mm (91158)
3x6mm (31531)
3x8mm (31532)
3x10mm (25211)
3x12mm (89202)
3x14mm (25187)
3x16mm (89203)
3x18mm (2308)
3x20mm (25188)
3x22mm (25189)
3x24mm (89204)
3x45mm (71037)

Shims and Washers



5.5x0.5mm (31381)
5.5x1.0mm (31382)
5.5x2.0mm (31383)

Set Screws

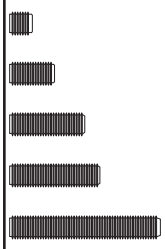

3x3mm (25225)
3x6mm (81257)
3x10mm (4671)
3x12mm (81258)
3x20mm (91737)

Flat Head (fhcs)

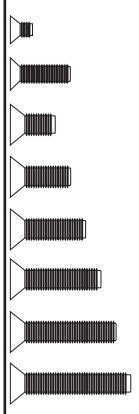

2x3mm (91749)
2.5x8mm (31472)
3x6mm (31541)
3x8mm (25201)
3x10mm (25202)
3x12mm (25203)
3x14mm (89208)
3x16mm (25204)

LP Socket Head (lp shcs)

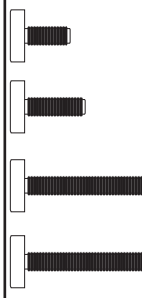

3x6mm (41089)
3x8mm (41096)
3x20mm (41091)
3x22mm (41095)

Nuts (lock/plain)



M3 Nut (Black) (91477)
M3 Alum. Locknut (Blue) (31550)
M3 Locknut (Black) (25215)

M3 Locknut w/Flange (Black) (25612)
FT 3mm Locknuts (Blue) (25392)

M4 Locknuts:
Serrated Steel LP (Black) (91150)
Serrated Steel (Silver) (91826)
Serrated Aluminum (Black) (91738)

Ball Bearings

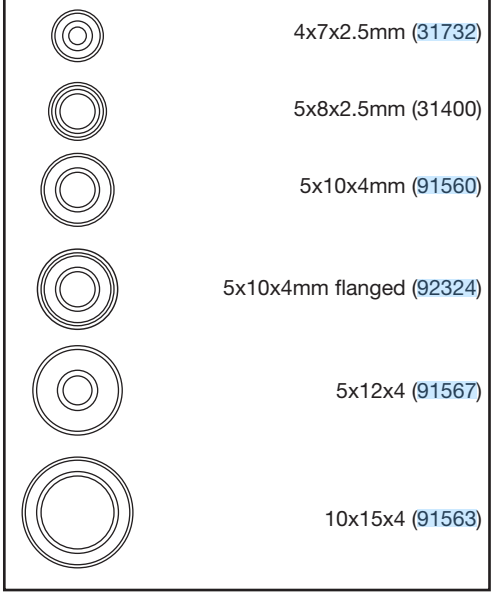

4x7x2.5mm (31732)
5x8x2.5mm (31400)
5x10x4mm (91560)
5x10x4mm flanged (92324)
5x12x4 (91567)
10x15x4 (91563)

Ballstuds

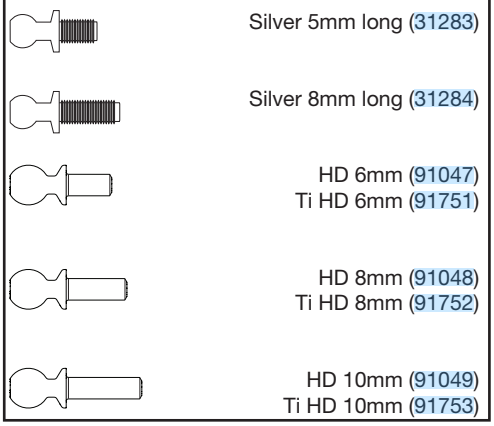

Silver 5mm long (31283)
Silver 8mm long (31284)
HD 6mm (91047)
Ti HD 6mm (91751)
HD 8mm (91048)
Ti HD 8mm (91752)
HD 10mm (91049)
Ti HD 10mm (91753)

Cap Head (shcs)

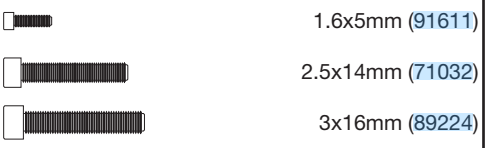

1.6x5mm (91611)
2.5x14mm (71032)
3x16mm (89224)

Notes:

:: Table of Contents

1..... Cover

2..... Introduction

3.....1:1 Hardware “Fold Out”

4..... Table of Contents

5.....Steering Build
Bag 1

5.....Front Suspension Build
Bag 2

8.....Caster / Steering Blocks Build
Bag 3

9.....Rear Suspension Build
Bag 4

10.....Ball Differential Build
Bag 5

11.....Gearbox Build
Bag 6

14.....Rear Hubs Build
Bag 7

15.....Turnbuckles Build
Bag 8

16.....Shocks Build
Bag 9

19.....Electronics Build
Bag 10

21.....Optional Rear Anti-Roll Bar Build

22.....Tuning Tips

24..... Setup Sheet “Kit Setup”

25..... Setup Sheet “Blank”

26..... Back Cover

:: Notes

This symbol indicates a special note or instruction in the manual.

x2 This symbol indicates the number of the same part that is required.

2 This symbol indicates the order within a step to assemble parts.

FACTORY TEAM This symbol indicates there are optional FT parts available

This symbol indicates a Racers Tip.



There is a 1:1 hardware foldout page in the front of the manual. To check the size of a part, line up your hardware with the correct drawing until you find the exact size. Each part in the foldout has a number assigned to it for ordering replacement parts.

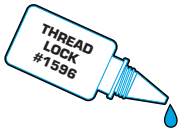

This symbol indicates where Thread Lock Adhesive should be applied. *not included

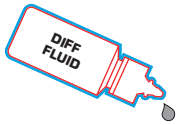

This symbol indicates where Diff Fluid should be applied.

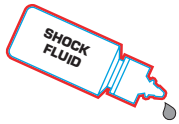

This symbol indicates where Shock Fluid should be applied.



This symbol indicates where FT Silicone Grease should be applied. *not included

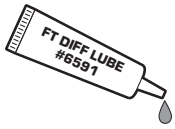

This symbol indicates where FT Diff Lube should be applied. *not included



This symbol indicates where Black Grease should be applied.



This symbol indicates where Green Slime can be applied. *not included

Bag 1 - Step 1

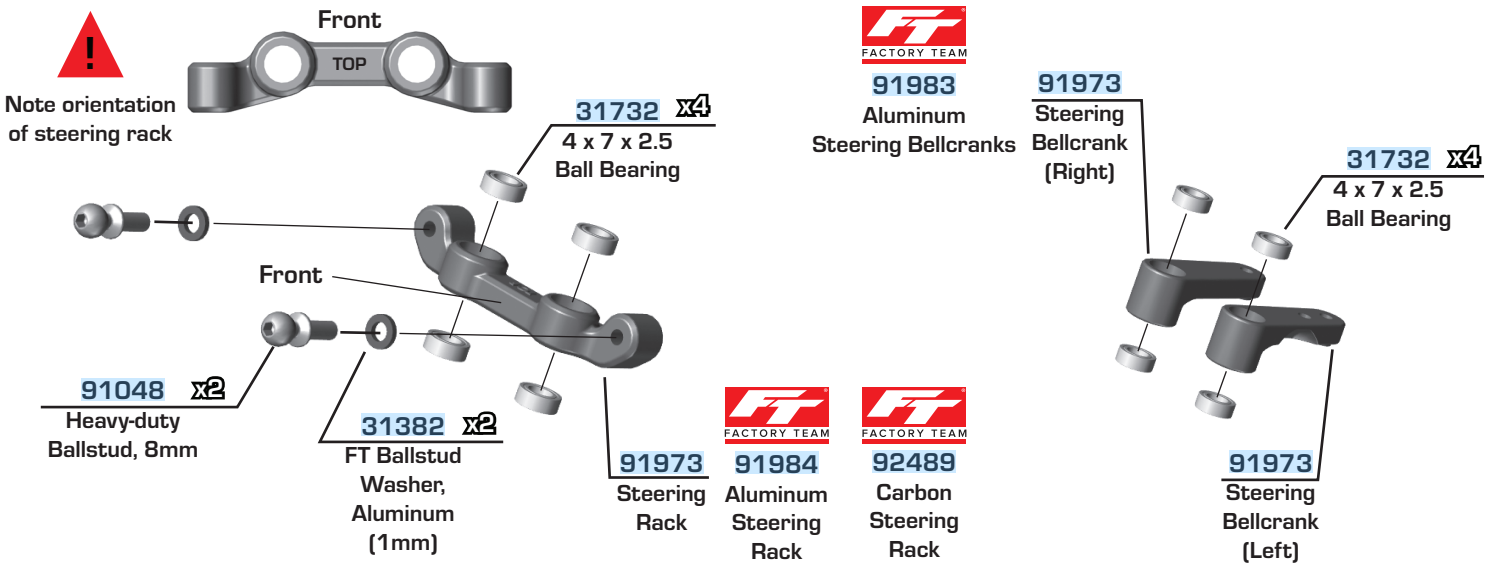

Bag 1 - Step 2

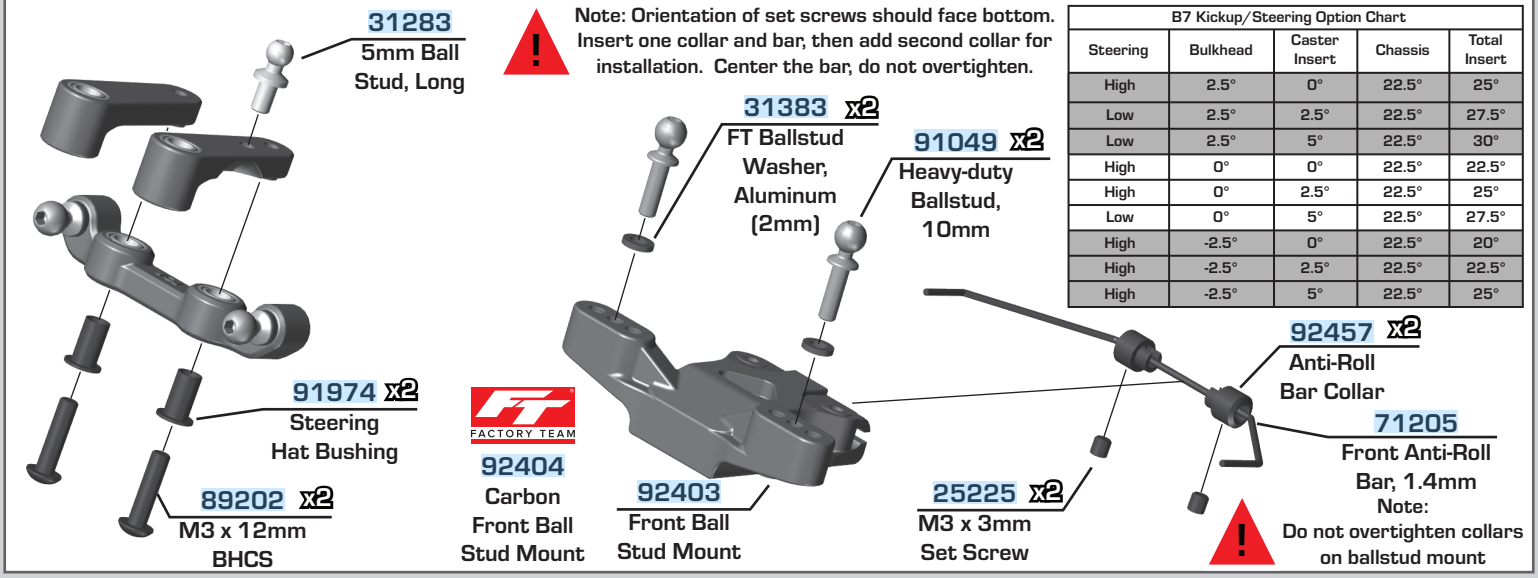

B7 Kickup/Steering Option Chart

Steering	Bulkhead	Caster Insert	Chassis	Total Insert
High	2.5°	0°	22.5°	25°
Low	2.5°	2.5°	22.5°	27.5°
Low	2.5°	5°	22.5°	30°
High	0°	0°	22.5°	22.5°
High	0°	2.5°	22.5°	25°
Low	0°	5°	22.5°	27.5°
High	-2.5°	0°	22.5°	20°
High	-2.5°	2.5°	22.5°	22.5°
High	-2.5°	5°	22.5°	25°

Bag 1 - Step 3

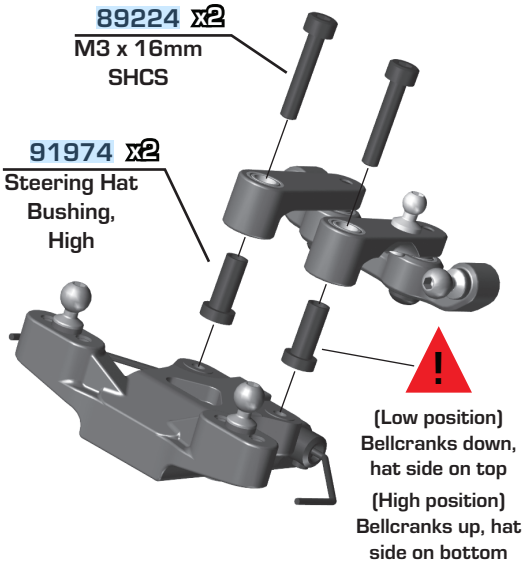

Bag 2 - Step 1

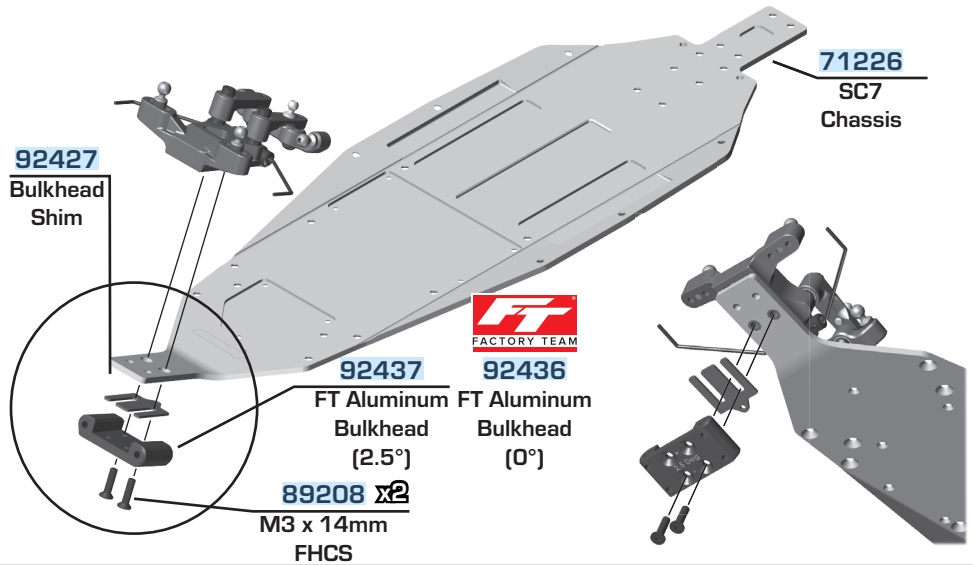

Bag 2 - Step 2

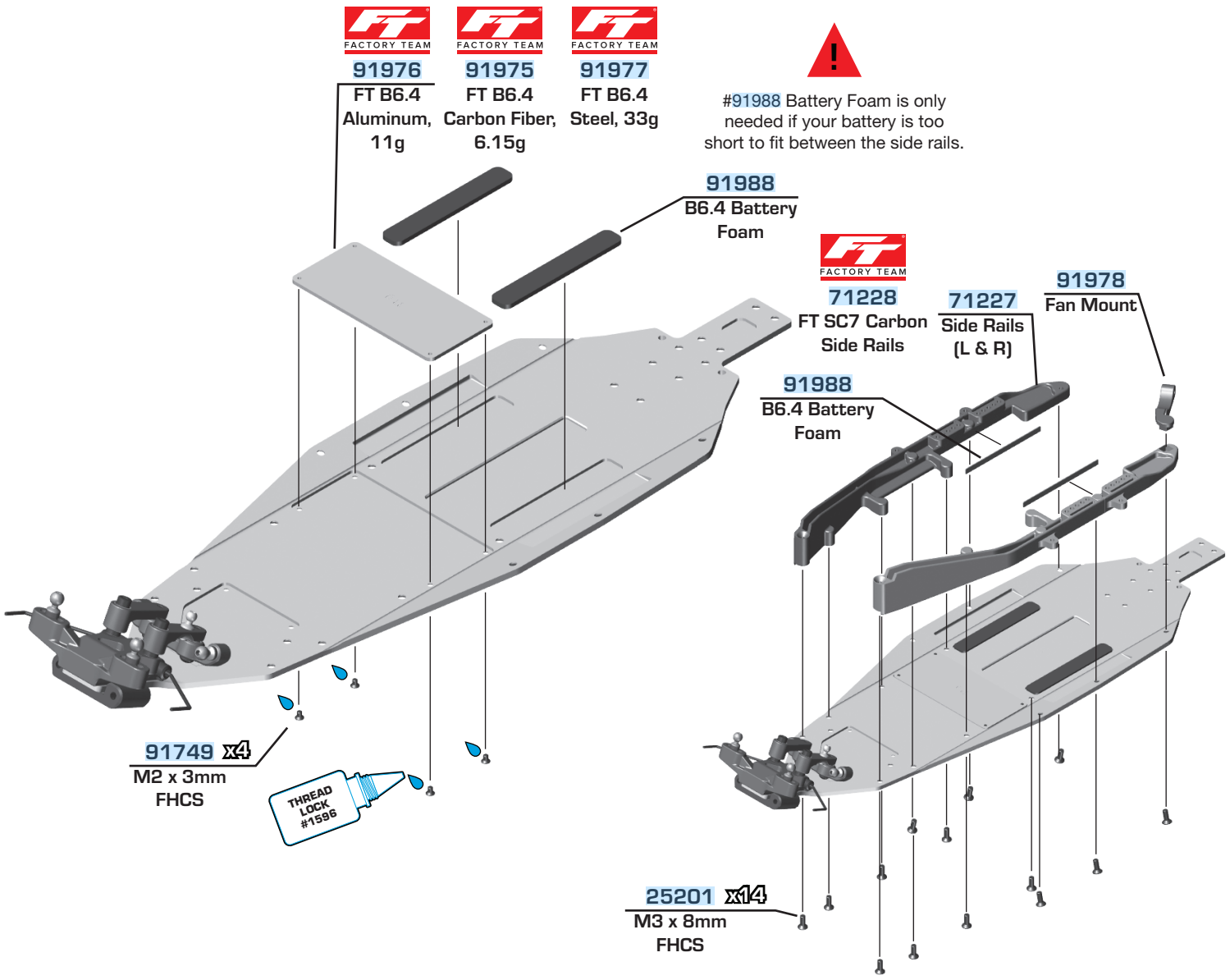

Bag 2 - Step 3

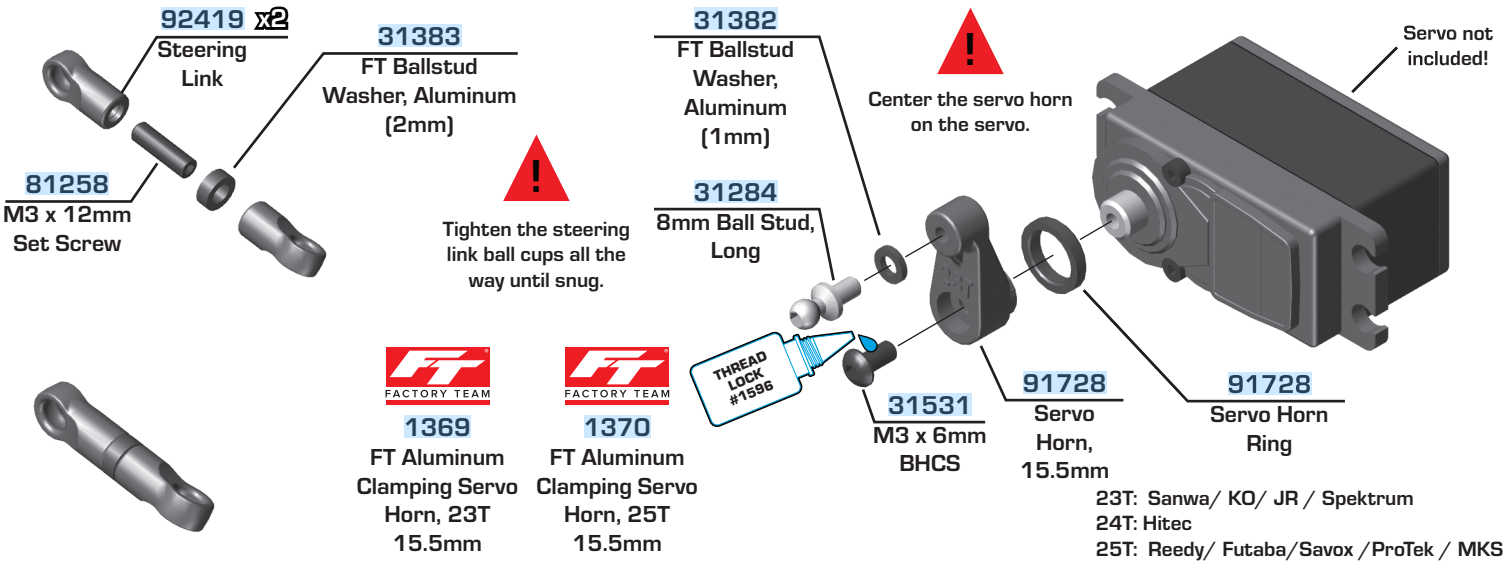

Bag 2 - Step 4

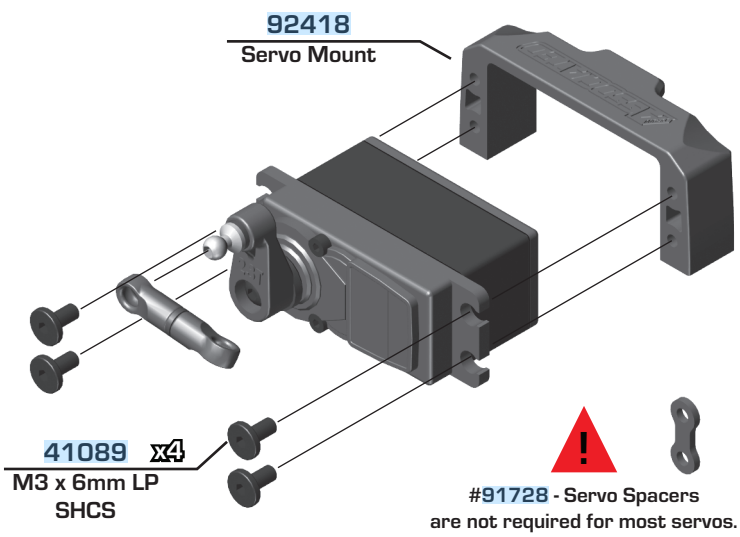

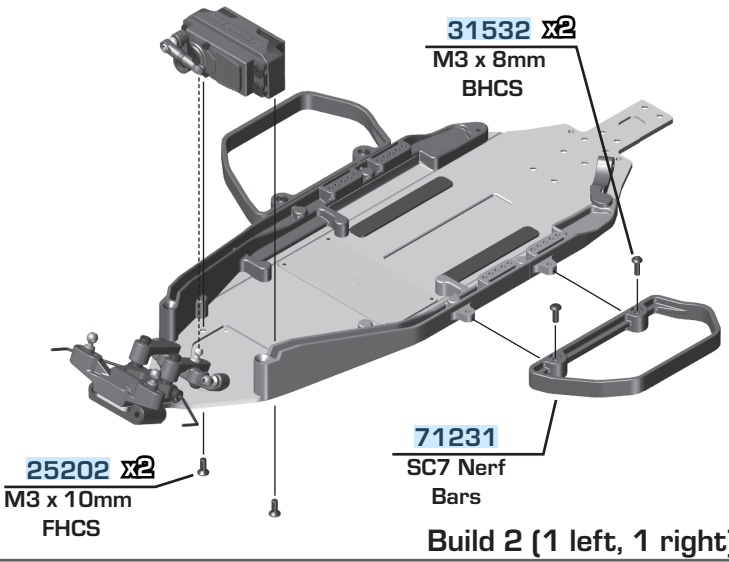

Build 2 (1 left, 1 right)

Bag 2 - Step 5

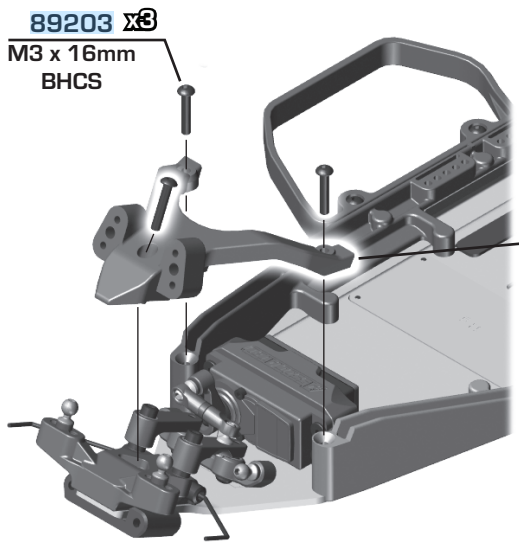

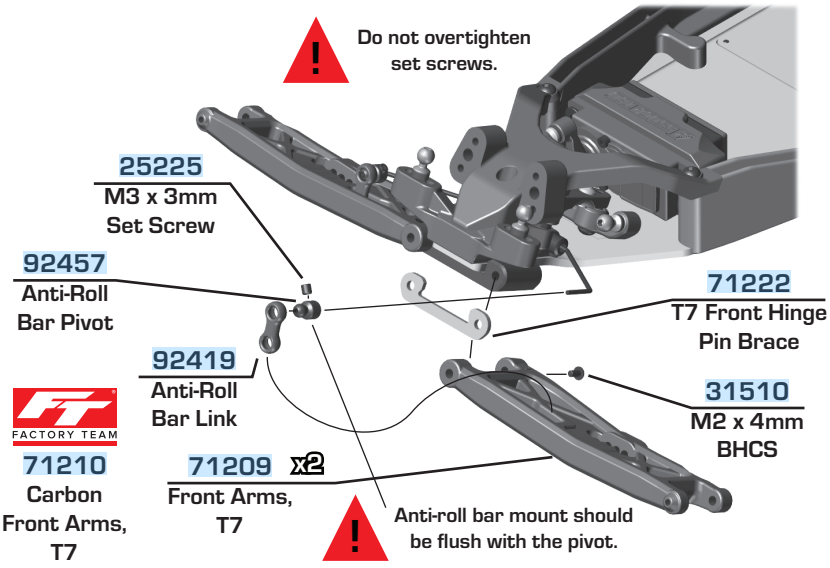

Bag 2 - Step 6

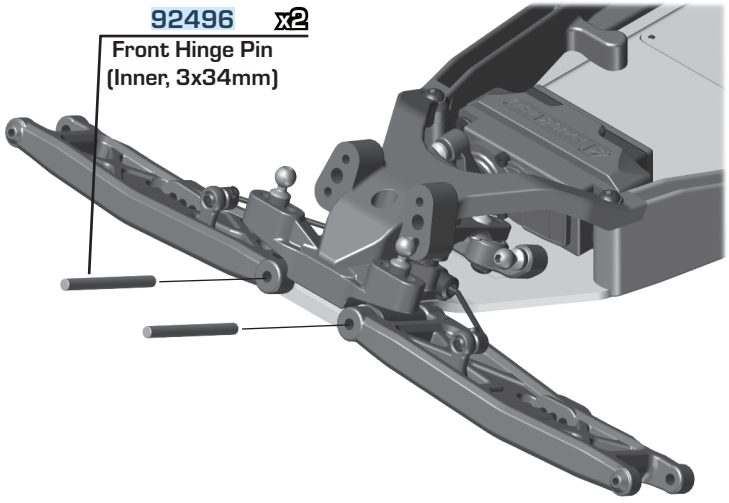

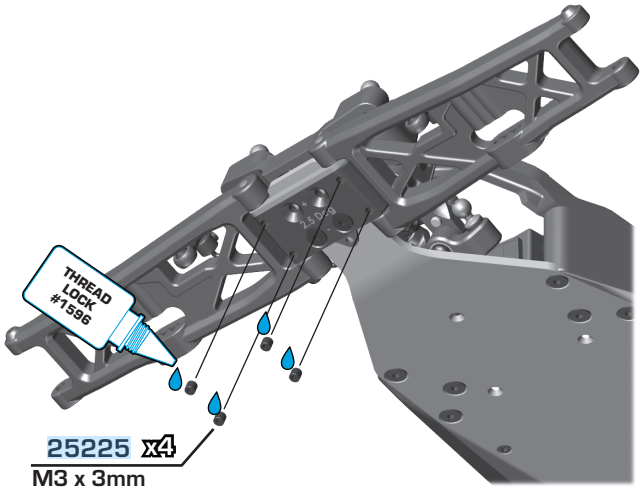

Build 2 (1 left, 1 right)

Bag 2 - Step 7

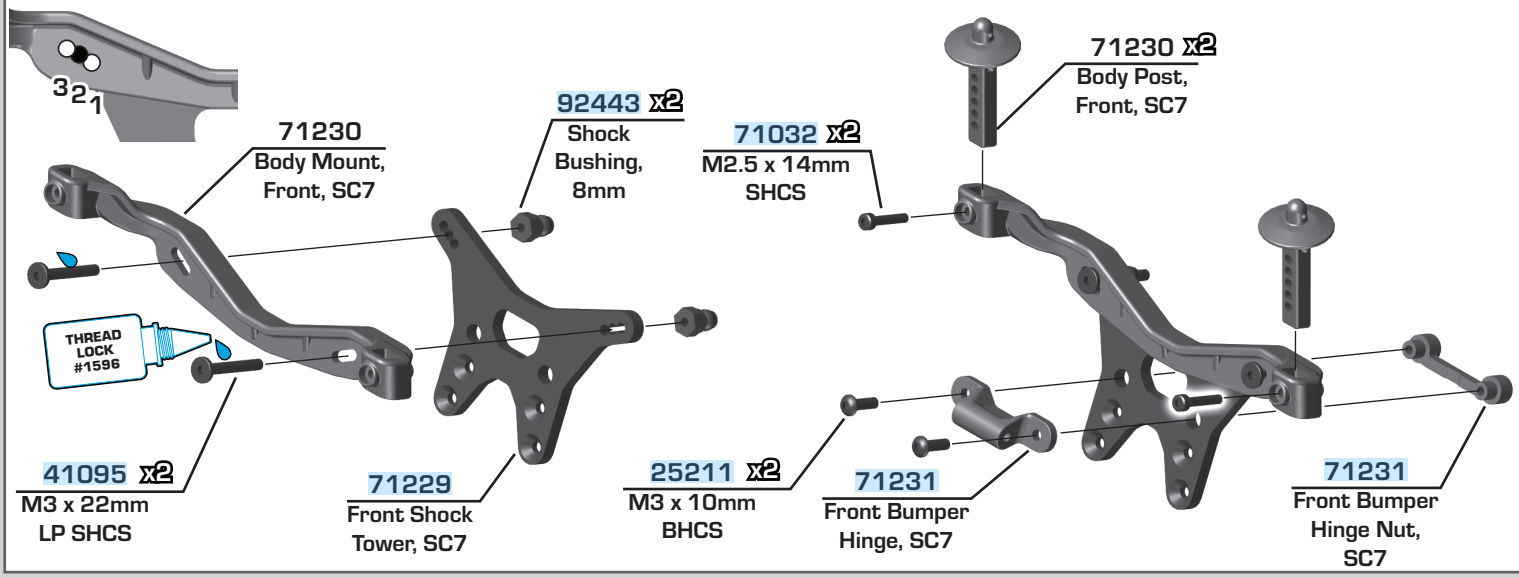

Bag 2 - Step 8

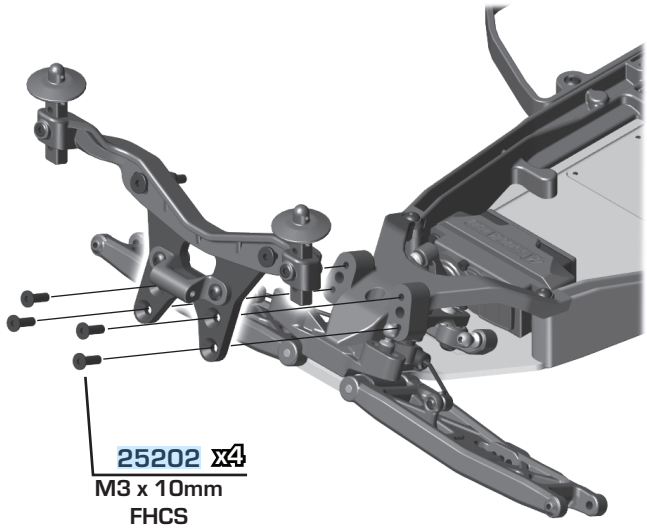

Do not overtighten screws. The bumper brace should rotate freely about the screws.

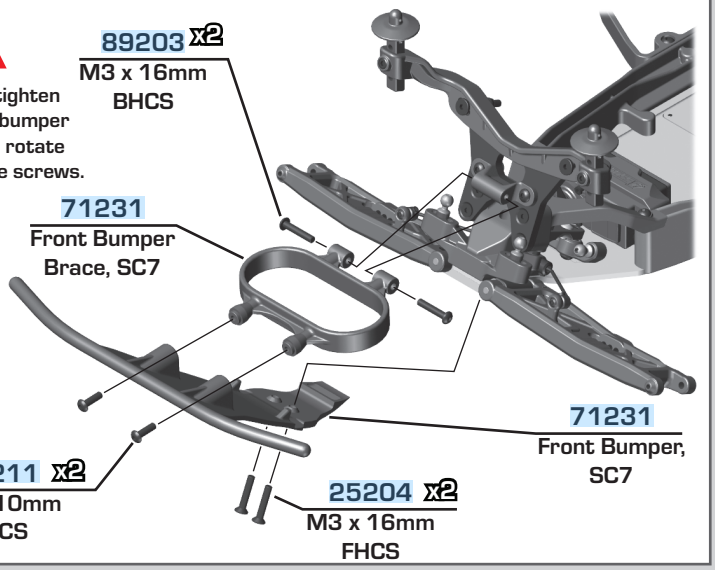

Bag 3 - Step 1

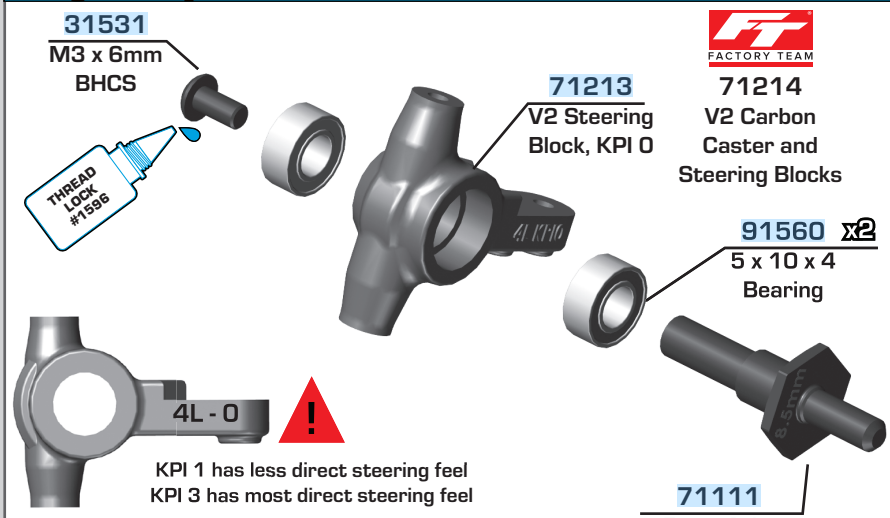

KPI 1 has less direct steering feel
KPI 3 has most direct steering feel

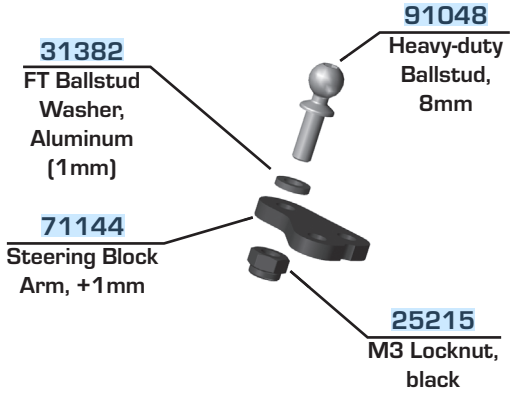

Build 2 (1 left, 1 right)

Bag 3 - Step 2

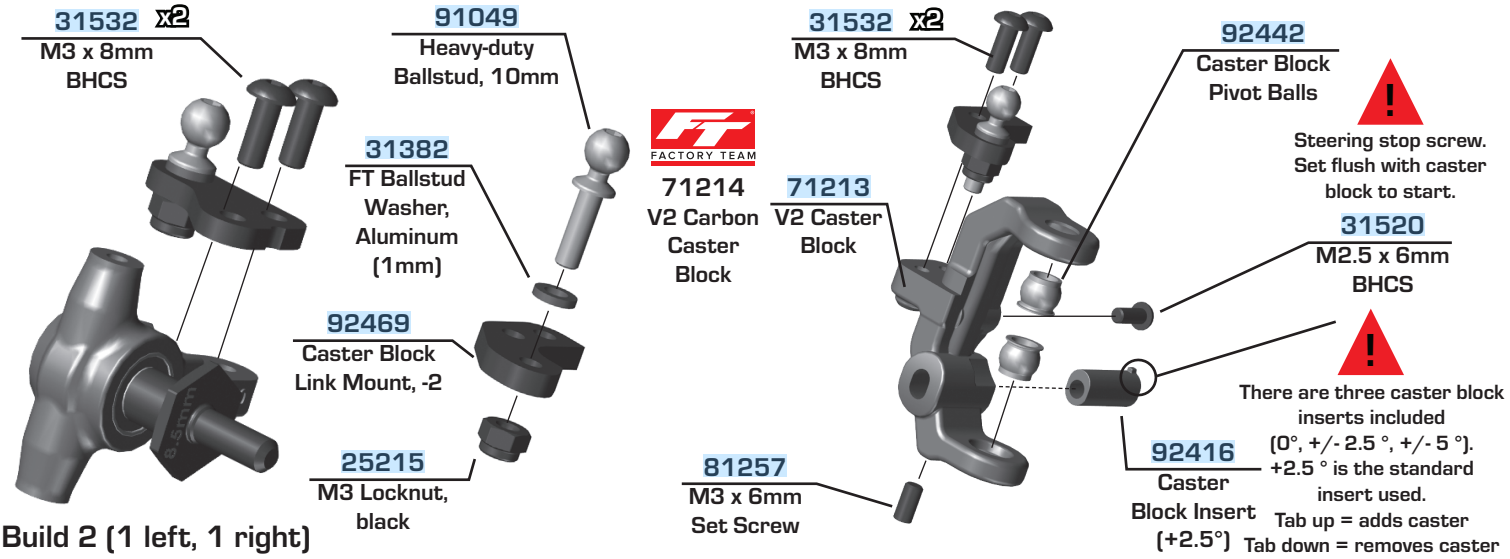

Build 2 (1 left, 1 right)

Bag 3 - Step 3

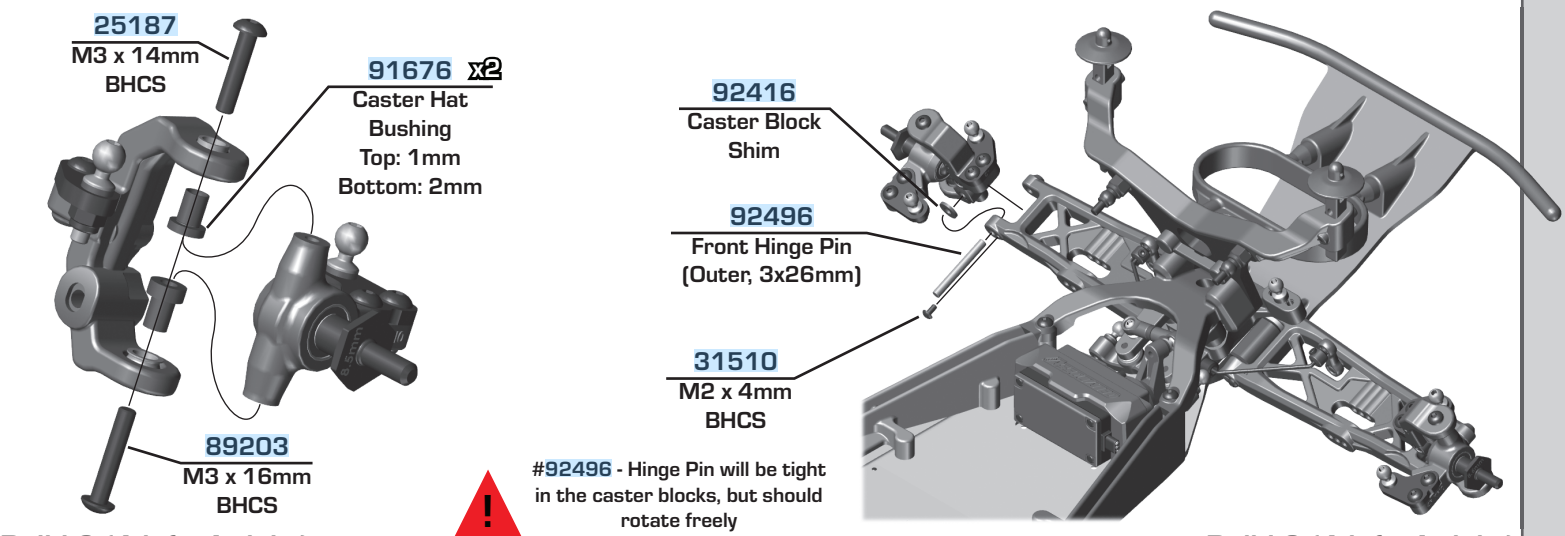

Build 2 (1 left, 1 right)

Bag 4 - Step 1

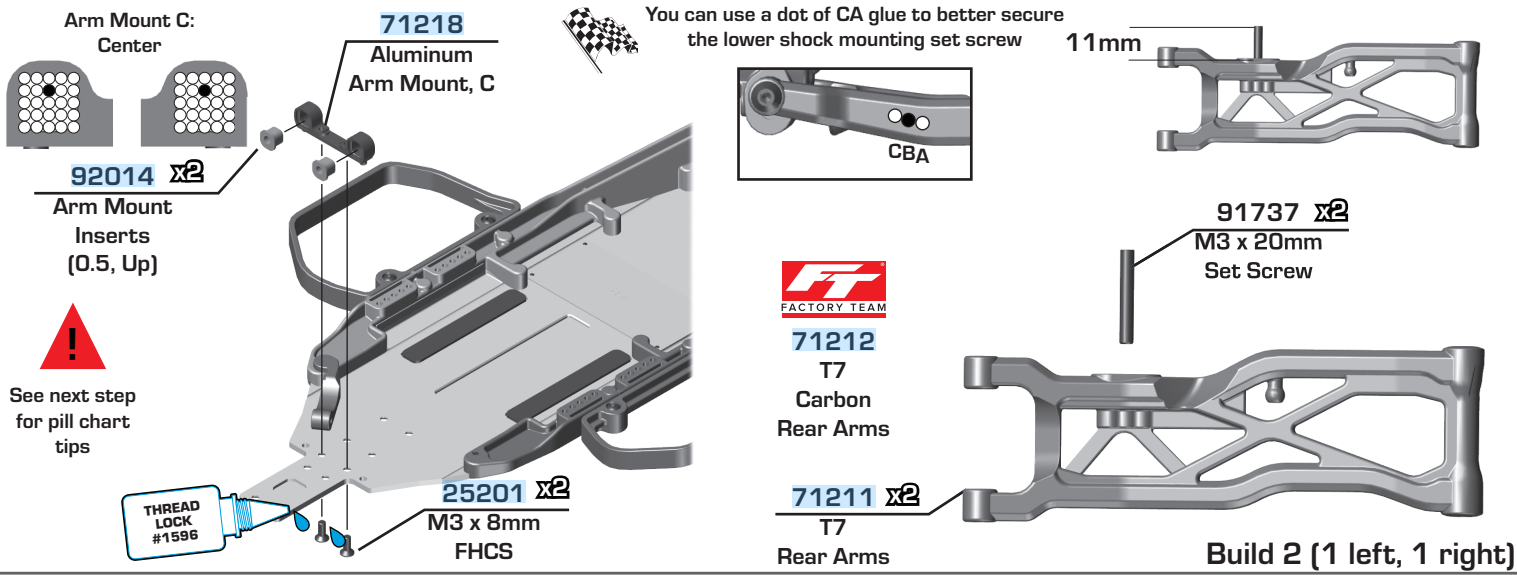

Build 2 (1 left, 1 right)

Bag 4 - Step 2

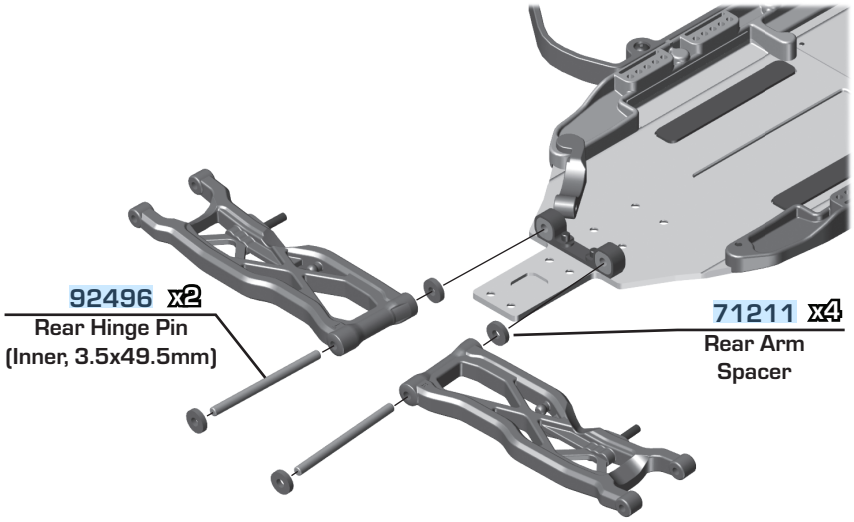

The (#71218) C and (#92433) D aluminum arm mounts allow for a large amount of setup combinations when using the (#92014) 0.5° and 1° arm mount inserts.

For a complete list of pill setup combinations, please visit our website by using the link below.
http://bit.ly/B6PillChart

	Toe-In	Anti-Squat
Arm Mount C: Center	3° Kit Setup	1.5° Kit Setup
Arm Mount D: Center		

Bag 5 - Step 1

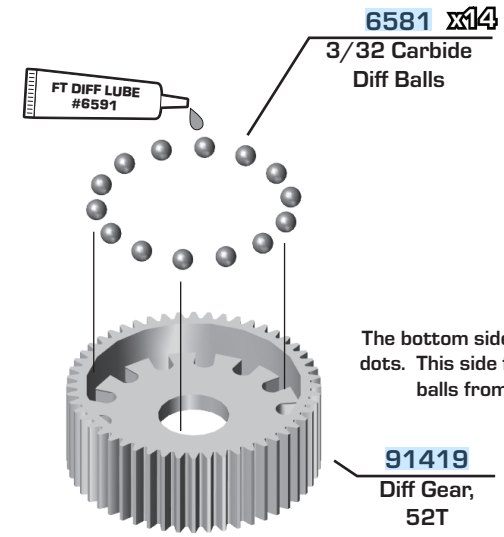

Build Tip:
The bottom side of the gear has 3 injection dots. This side faced down will keep the diff balls from falling thru the holes

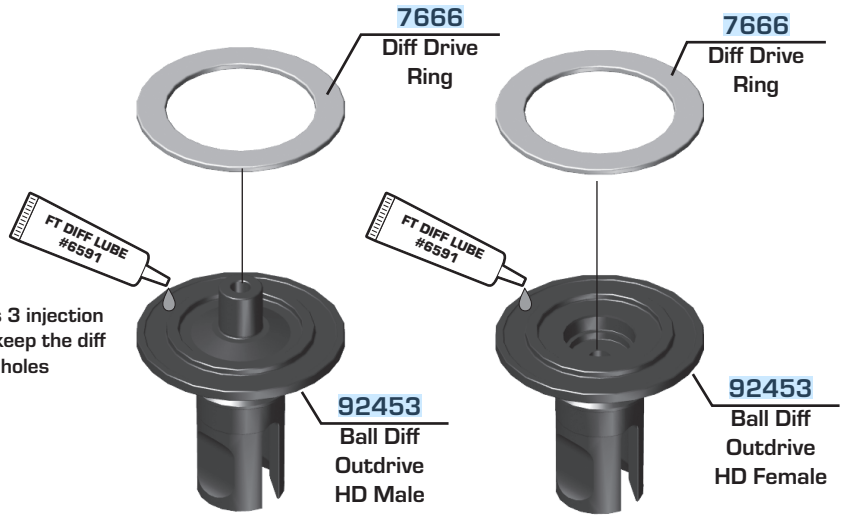

Bag 5 - Step 2

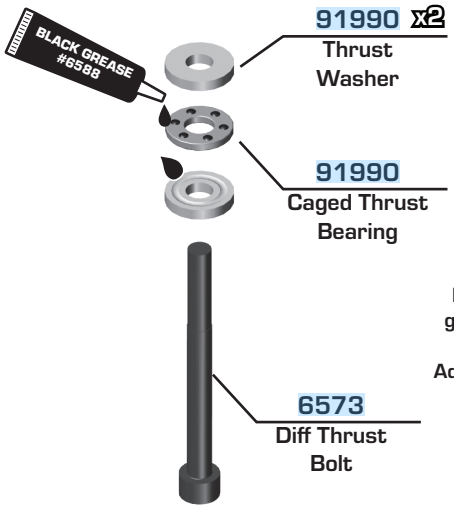

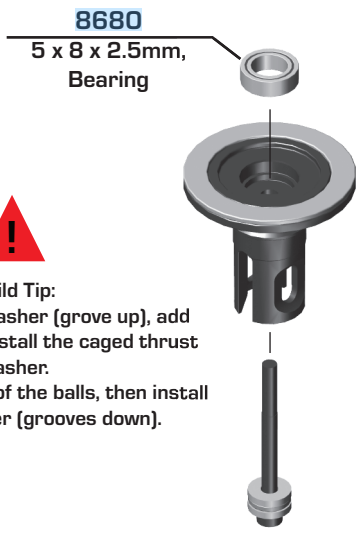

Build Tip:
Install the first washer (grove up), add grease #6588. Install the caged thrust washer.
Add grease on top of the balls, then install the 2nd washer (grooves down).

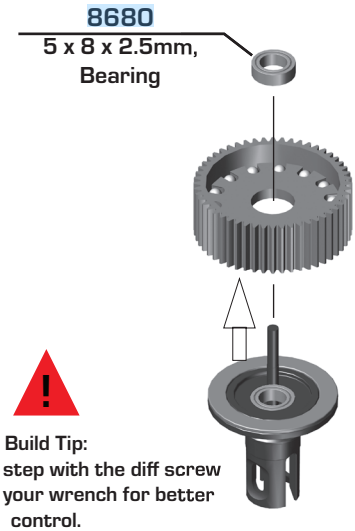

Build Tip:
Do this entire step with the diff screw on the end of your wrench for better control.

Bag 5 - Step 3

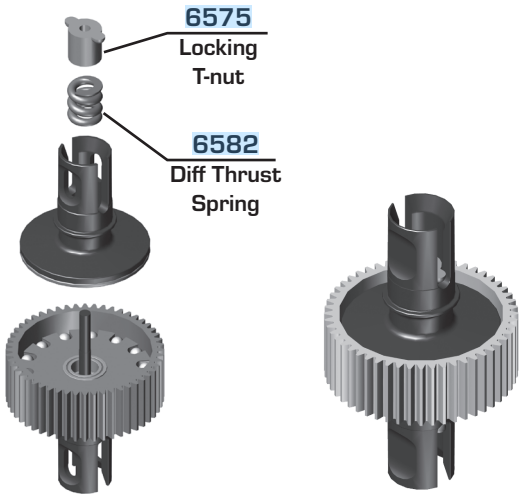

As you tighten the diff bolt, you will notice the T-nut ears moving closer to the bottom of the outdrive slot. This compresses the spring behind the T-nut. The spring should be completely compressed at the time the T-nut reaches the end of the slot. Caution! Pay close attention to the feeling when the spring is completely compressed. Do not overtighten the bolt. When you feel the spring completely compressed, loosen the diff bolt 1/8 of a turn. Your diff should now operate smoothly but with resistance as the outdrives move in opposite directions.
After you have driven the car once, re-check the diff setting.

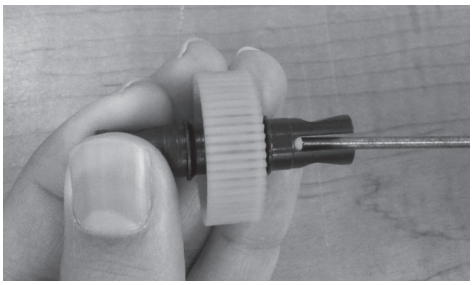

Bag 6 - Step 1

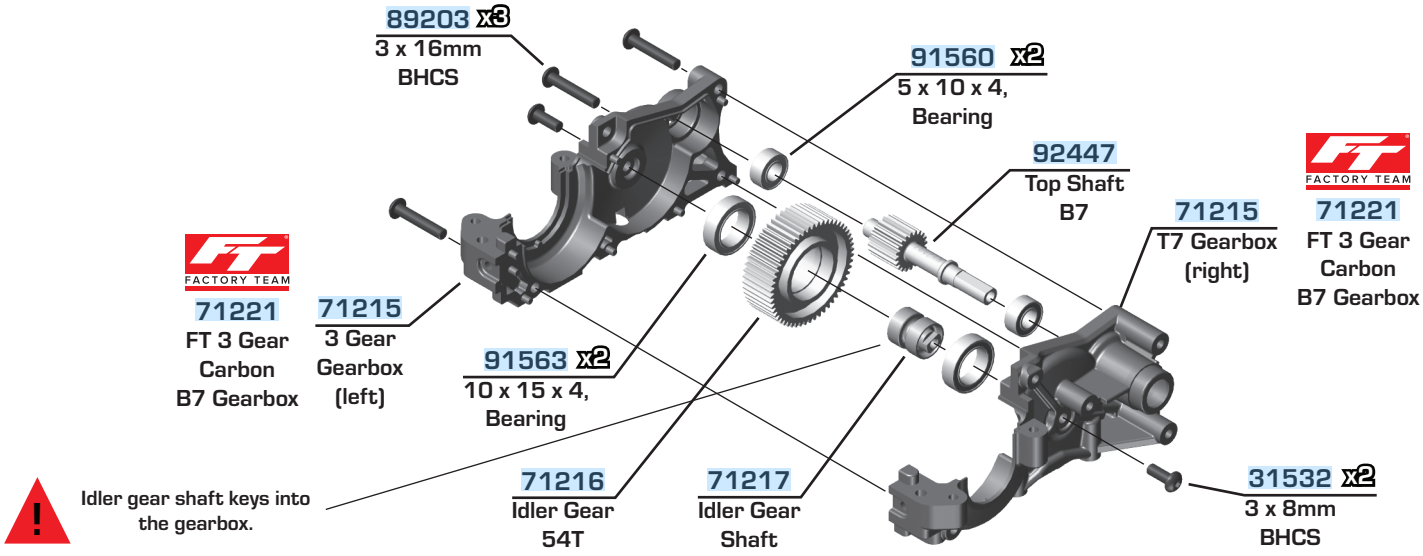

Bag 6 - Step 2

Optional

Note order of assembly.

Note: Orientation of set screws should face away from gearbox. Insert one collar and bar, then add second collar for installation. Center anti-roll bar. Do not overtighten!

Do not over-tighten the anti-roll bar set screws. The anti-roll bar should rotate freely in the assembly.

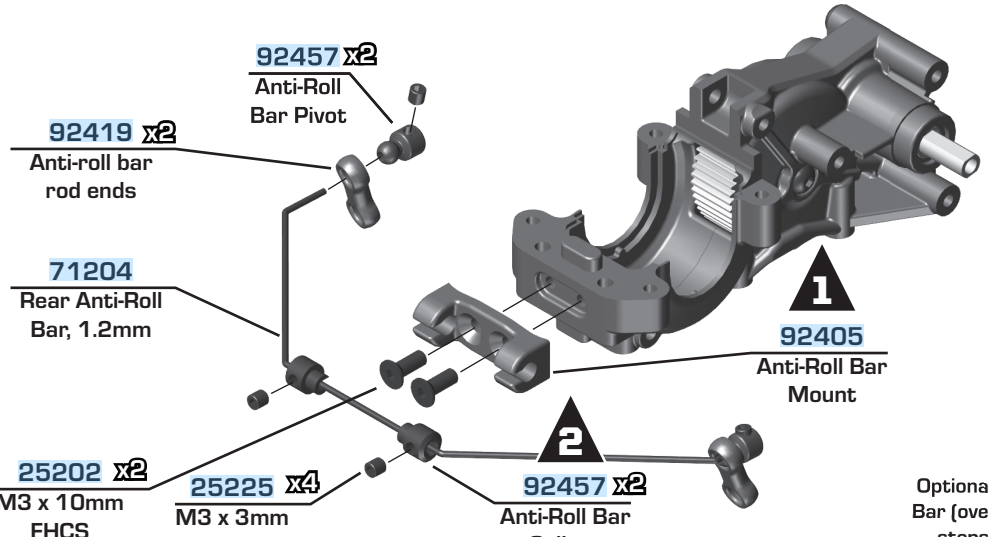

Optional Rear Anti-Roll Bar (over the axle) build steps on page 21!

Bag 6 - Step 3

Diff Height	
	3 Kit Setup
	2
	1
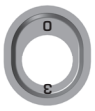	0



Add a drop of Diff Lube (#6591 - not included) to the teeth of the diff gear, idler gear, and top shaft.



Diff Height Inserts: The number on top is the setting. Stock diff height is 3, but this insert does not have the number up top.

Arm Mount D:
1° Center

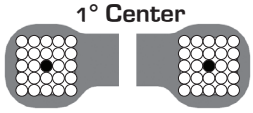

91563 x2
10 x 15 x 4 Bearing

71223 x2
3 Gear Diff Height Insert

89203 x4
M3 x 16mm BHCS

71221
3 Gear Carbon Gearbox Top

71215
B7 Gearbox Top

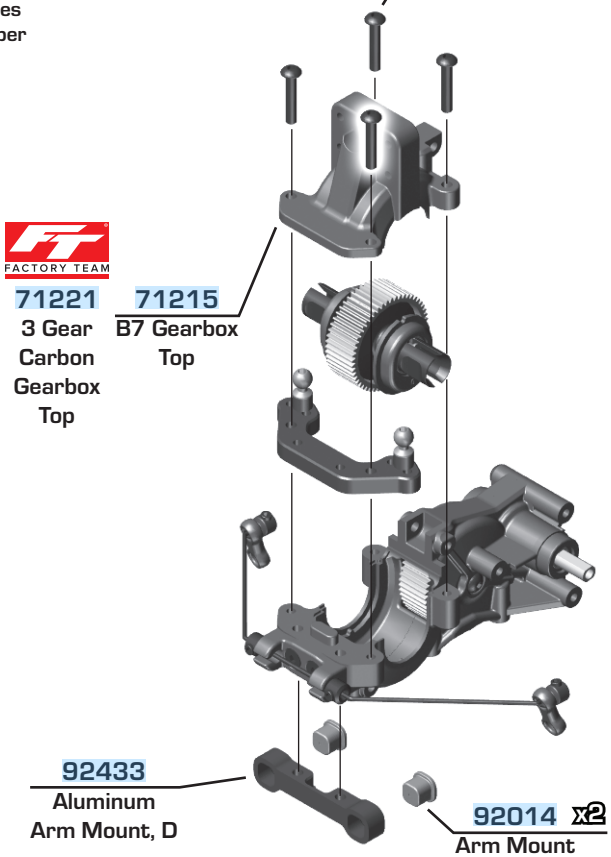

91048 x2
Heavy-duty Ballstud, 8mm

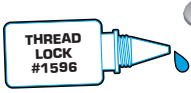

31383 x4
Ballstud Washers, 5.5x2.0mm, Blue Aluminum

92440
B7 Rear Ballstud Mount, Aluminum

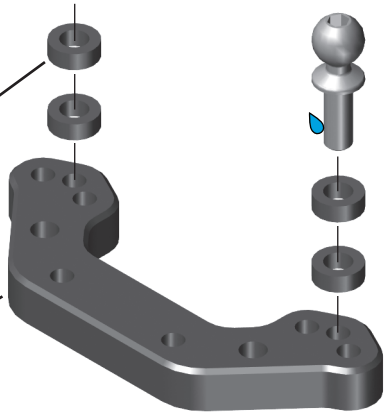

92433
Aluminum Arm Mount, D

92014 x2
Arm Mount Inserts (1°)

Bag 6 - Step 4

89203
M3 x 16mm BHCS

92427
B7 Spur Gear Guard

91803
B6.1 Slipper Hub, Inner

92296
Octalock Spur Gear, 81T 48P

There's also a 75T, 48P spur gear (#92294) included for stock motor use!

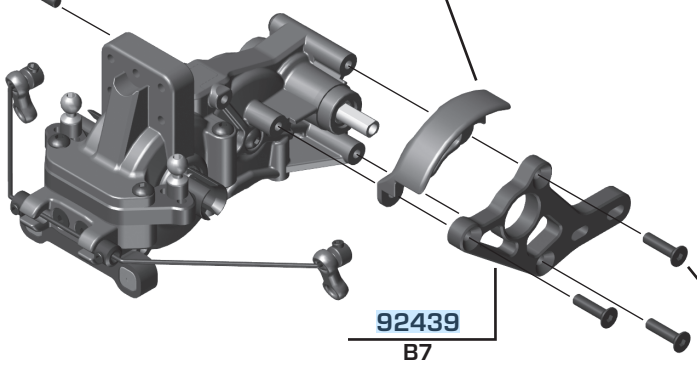

#92296 spur gear walls should point away from gear box.

92288 x2
Octalock Slipper Pad, 19mm

92286
FT Octalock LCF Slipper Pad, 19mm

25203 x3
M3 x 12mm FHCS

92439
B7 Motor Mount

92451
B7 Slipper Hub, Outer

92448
B7 Top Shaft Screw

Bag 6 - Step 5

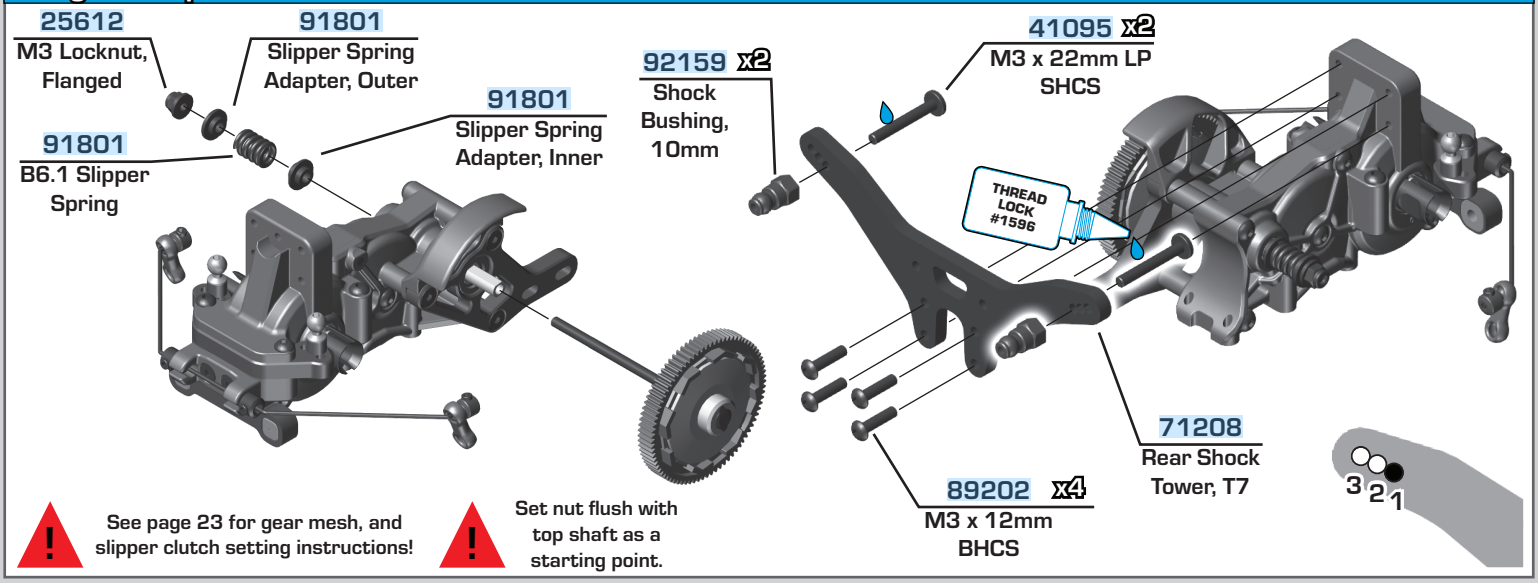

Bag 6 - Step 5

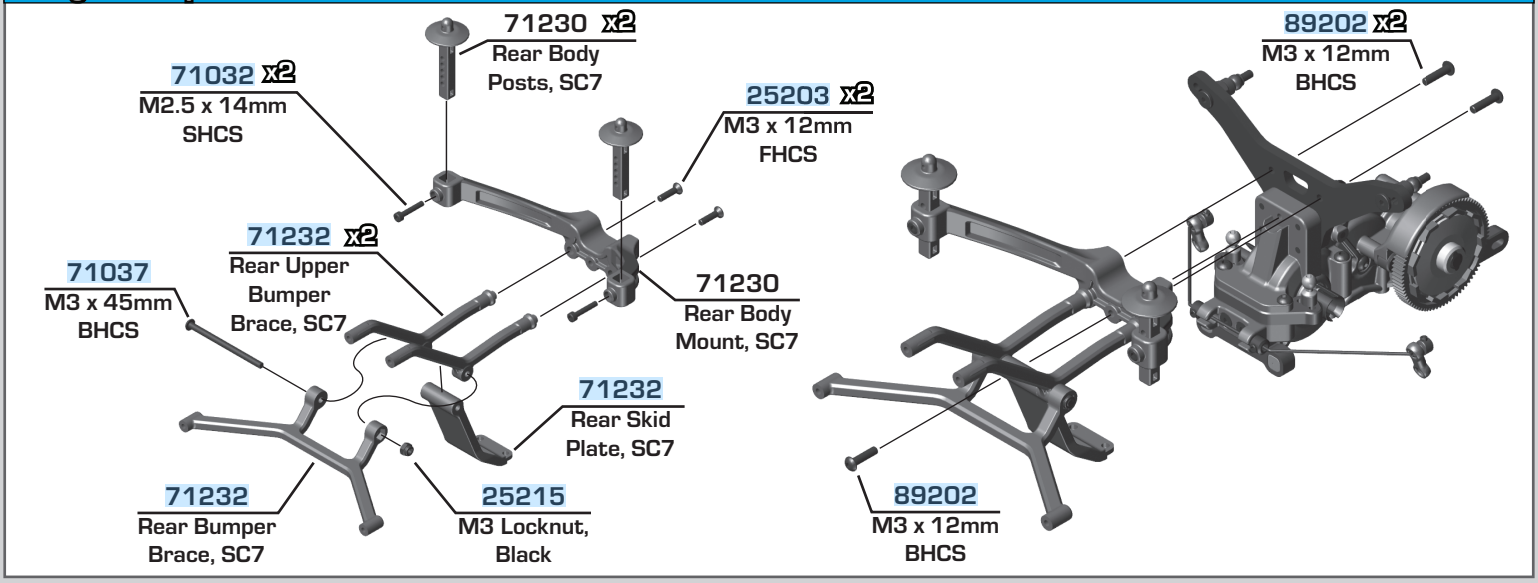

Bag 6 - Step 5

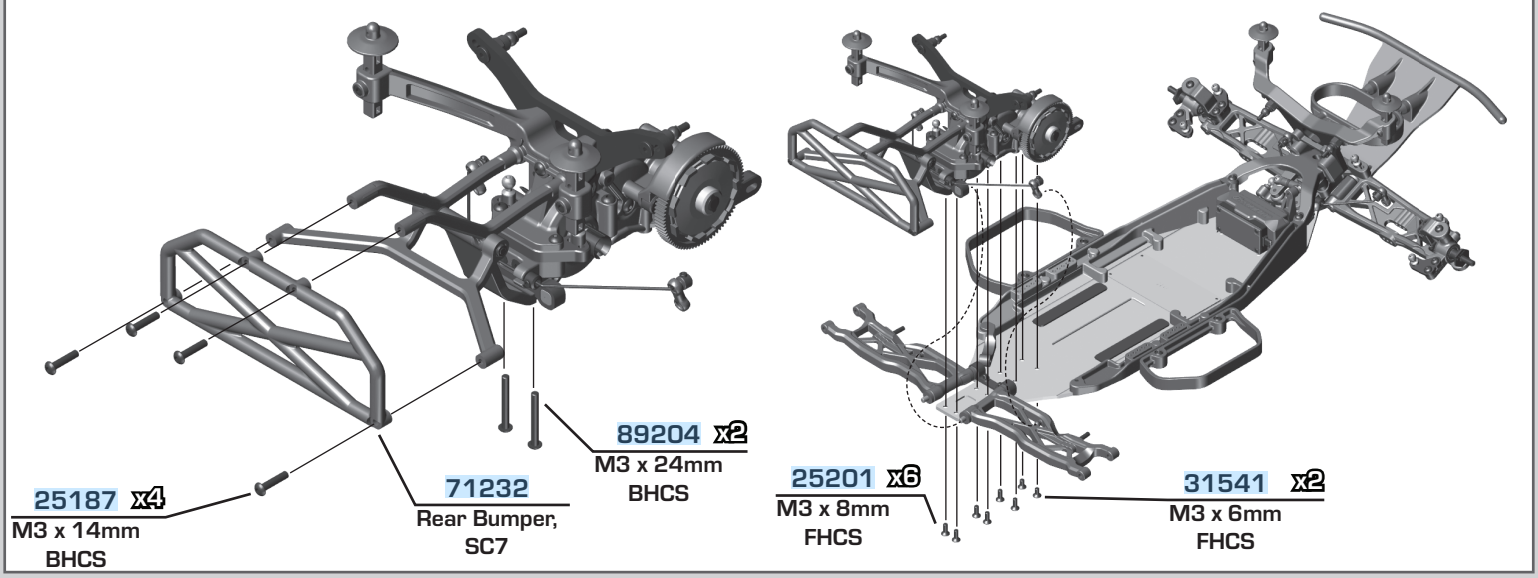

Bag 7 - Step 1

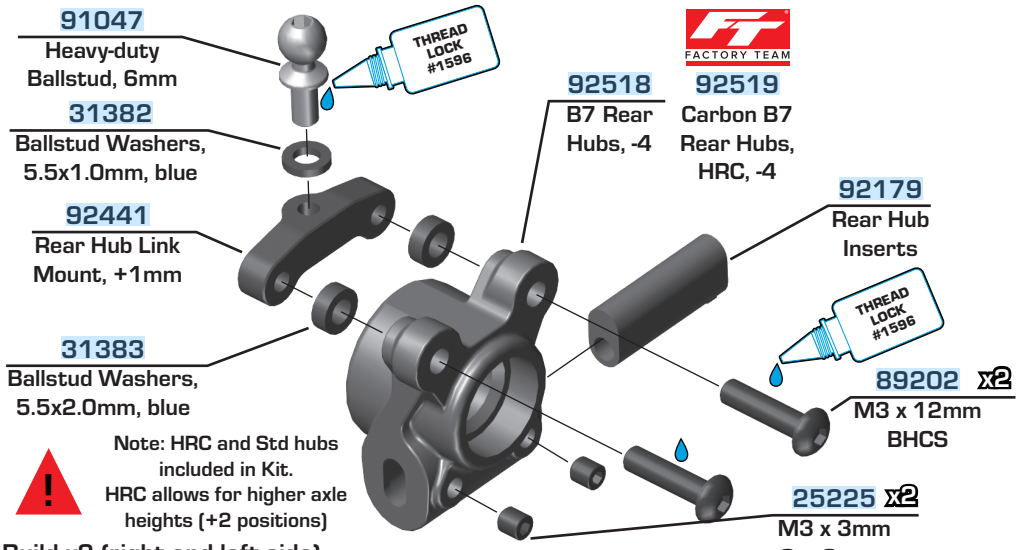

Note: HRC and Std hubs included in Kit. HRC allows for higher axle heights (+2 positions)

Build x2 (right and left side)

Axle Height		
3 ↑ 0 ↓	3 ↑	+3mm Kit Setup
2 ↑ 1 ↓	2 ↑	+2mm
2 ↓ 1 ↑	1 ↑	+1mm
3 ↓ 0 ↑	0 ↑	+0mm

Bag 7 - Step 2

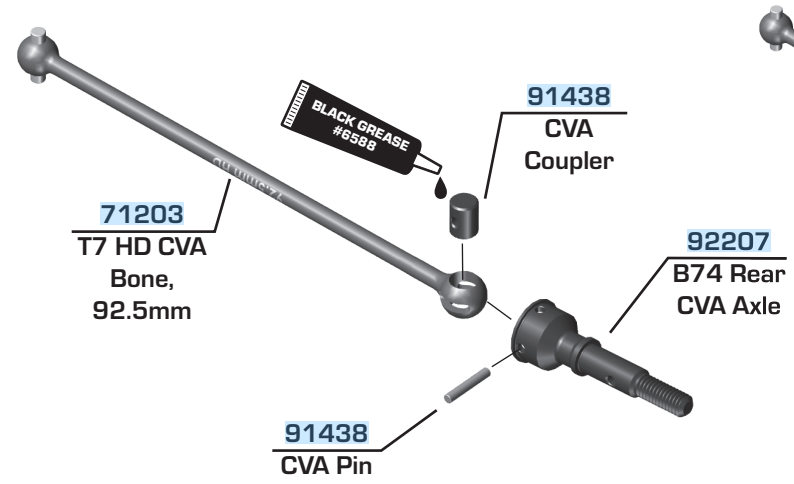

Build x2

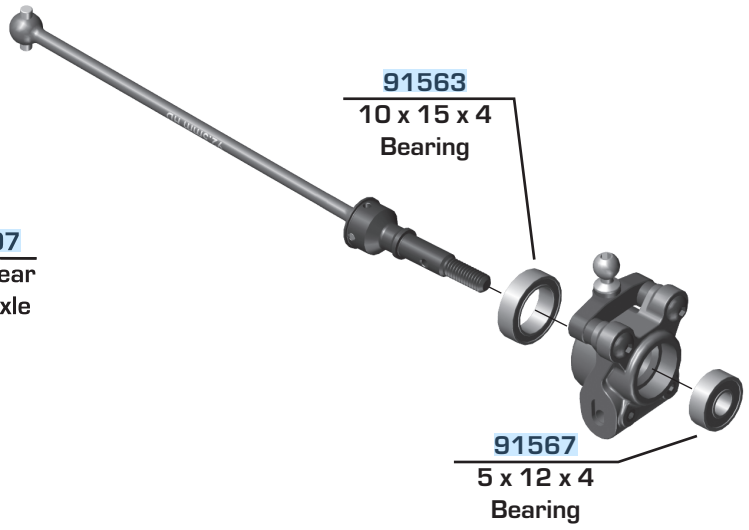

Build x2 (right and left side)

Bag 7 - Step 3

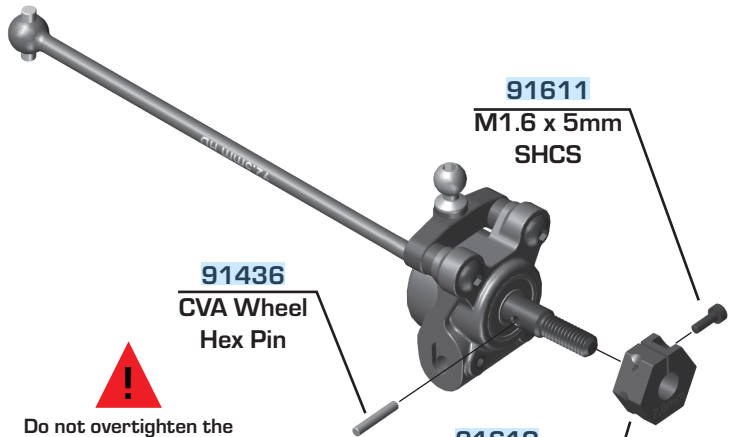

Do not overtighten the 1.6 x 5mm SHCS into the Clamping wheel hex.

Build x2 (right and left side)

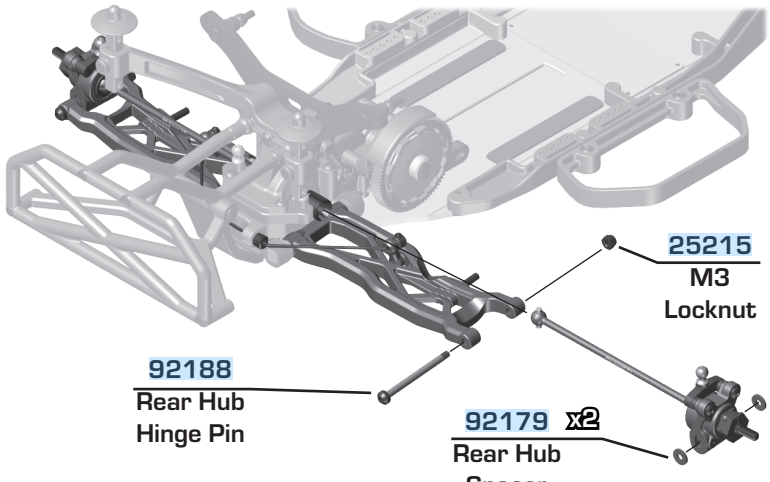

Hinge Pin will be tight in the rear hub, but should rotate freely in the rear arms.

Build x2 (right and left side)

Bag 8 - Step 1

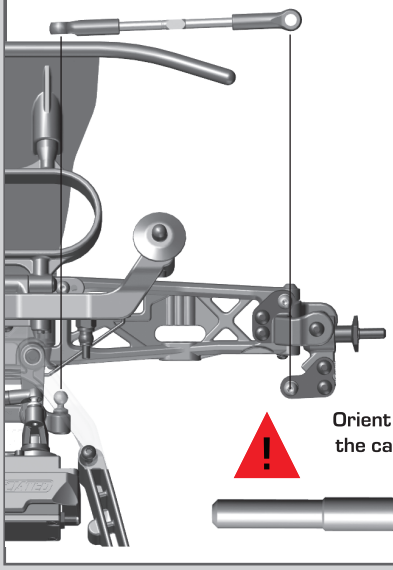

92308
Ball Cup

BLACK GREASE #6588

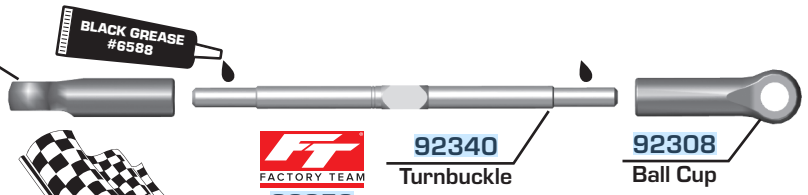

92340
Turnbuckle
3.5x67mm

92308
Ball Cup

FACTORY TEAM
92352
Titanium
Turnbuckle
3.5x67mm

Racers Tip:

Use black grease (#6588) on the threads of the turnbuckles for easier ball cup installation!

Measurements given are approximation. Camber should be set with a gauge at ride height.

Orient the notch to the left throughout the car. It indicates which end has the left hand threads!



Front Steering Turnbuckle
42.00mm

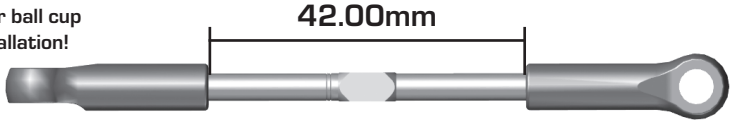

Build x2 (right and left side)

Bag 8 - Step 2

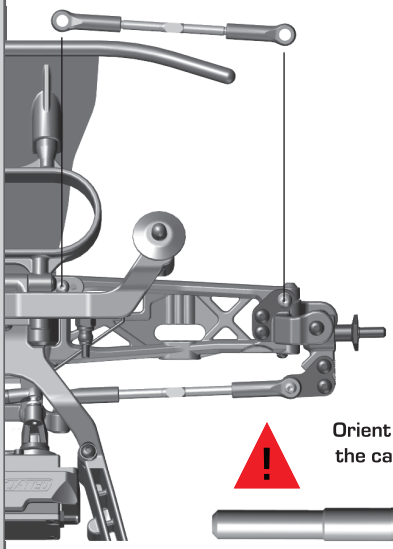

BLACK GREASE #6588

92308
Ball Cup

FACTORY TEAM
92351
Titanium
Turnbuckle
3.5x58mm

92339
Turnbuckle
3.5x58mm

92308
Ball Cup

Orient the notch to the left throughout the car. It indicates which end has the left hand threads!



Front CamberTurnbuckle
40.50mm

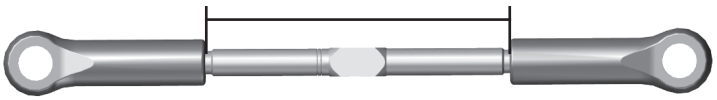

Build x2 (right and left side)

Bag 8 - Step 3

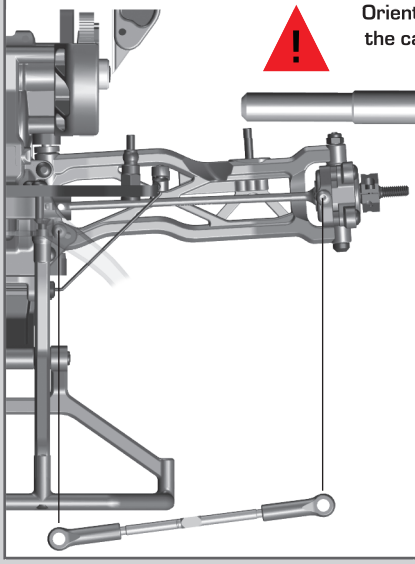

Orient the notch to the left throughout the car. It indicates which end has the left hand threads!



BLACK GREASE #6588

92308
Ball Cup

FACTORY TEAM
92352
Titanium
Turnbuckle
3.5x67mm

92340
Turnbuckle
3.5x67mm

92308
Ball Cup

Measurements given are approximation. Camber should be set with a gauge at ride height.

Rear Camber Turnbuckle
49.50mm

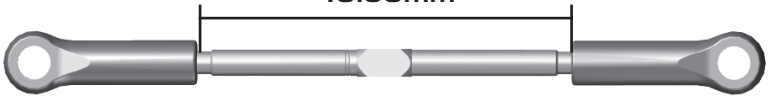

Build x2 (right and left side)

Bag 9 - Step 1

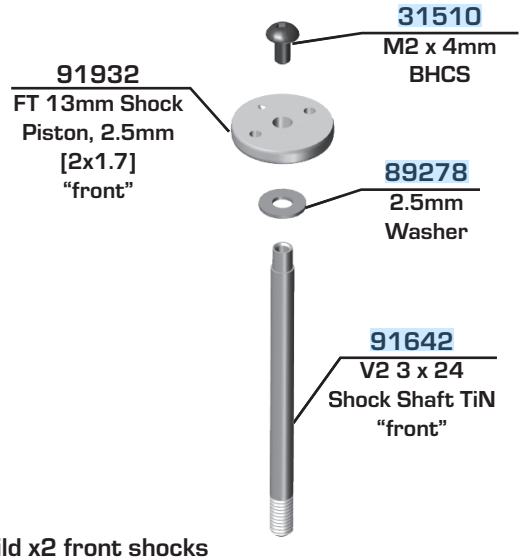

Build x2 front shocks

Mount the shock pistons with the number facing up!

Racers Tip:

Use a marker over the numbers on the pistons to make them easily visible!

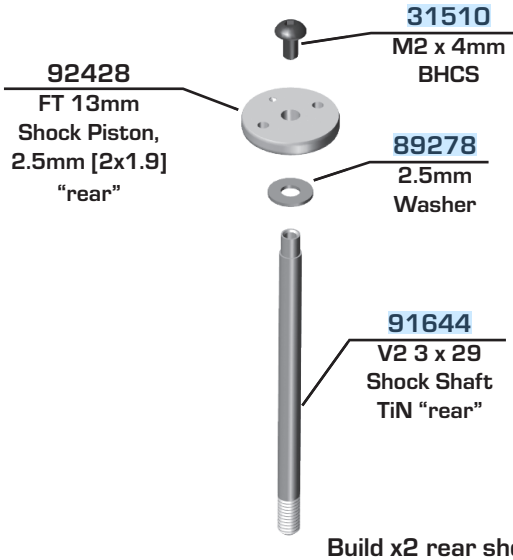

Build x2 rear shocks

Bag 9 - Step 2

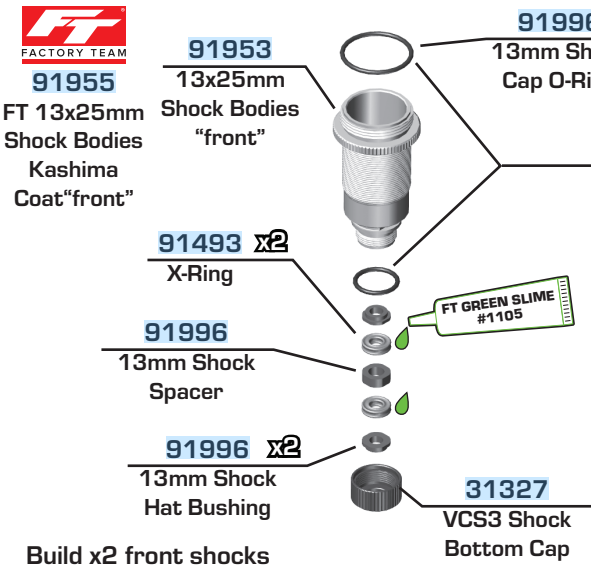

Build x2 front shocks

Lightly rub shock oil on the O-ring before installation!

Racers Tip:

Coating the O-rings with green slime (#1105) helps seal & reduce O-ring swell! Green slime not included in kit!

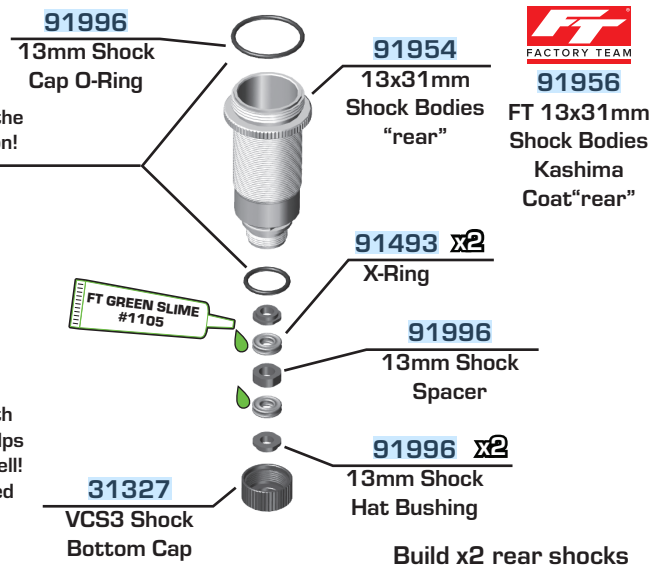

Build x2 rear shocks

Bag 9 - Step 3

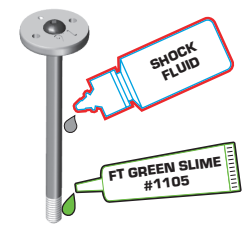

Lightly rub shock fluid or green slime on threads

There are 3 lengths of shock eyelet in the kit. Pay attention to length when building as these affect your droop and uptravel.

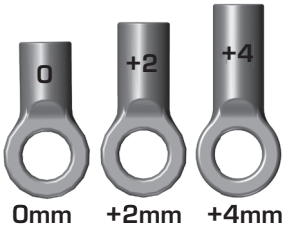

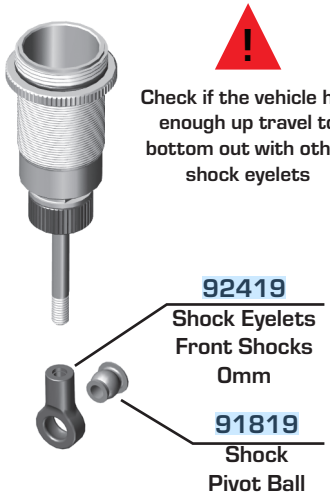

Build x2 front shocks

Check if the vehicle has enough up travel to bottom out with other shock eyelets

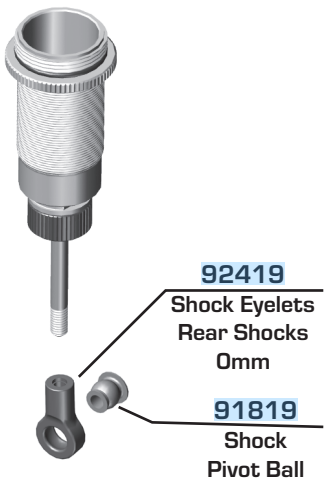

Build x2 rear shocks

Bag 9 - Step 4

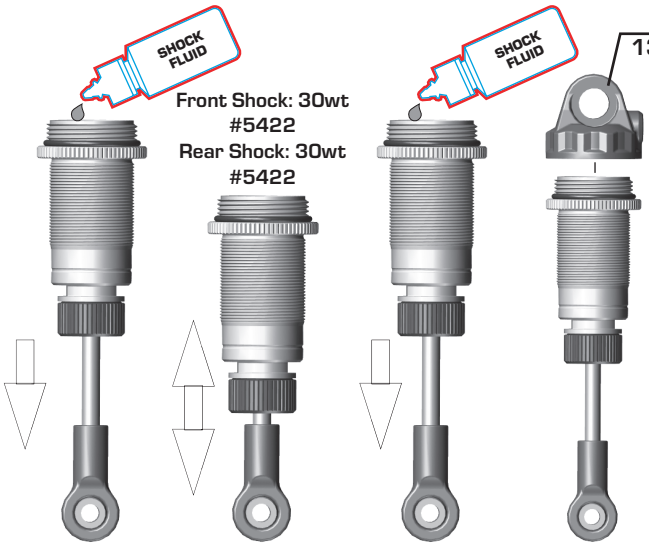

Shock Bleeding Steps:

1. Before assembly, get each bleed screw and thread it 1-2 turns into the shock cap, then remove the screw. This will make it easier when you are bleeding your shocks.
2. Pull shock shaft down.
3. Fill shock body 3/4 full with silicone shock fluid.
4. Slowly move the shock shaft up and down to remove air from under the piston.
5. Wait for bubbles to come to surface.
6. Fill shock body to top with silicone shock fluid.
7. Place a drop of oil in the cap and on cap threads.
8. Install cap (without bleed screw) and tighten completely.
9. Slowly compress shaft all the way to bleed excess silicone shock fluid out the hole in the cap (use rag around shock to catch excess fluid).
10. Install M2x4mm button head screw until snug while shaft is fully compressed.

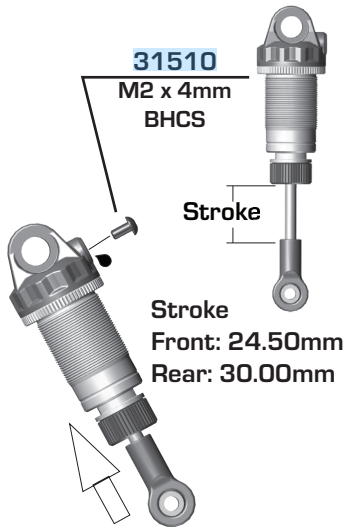

Bag 9 - Step 5

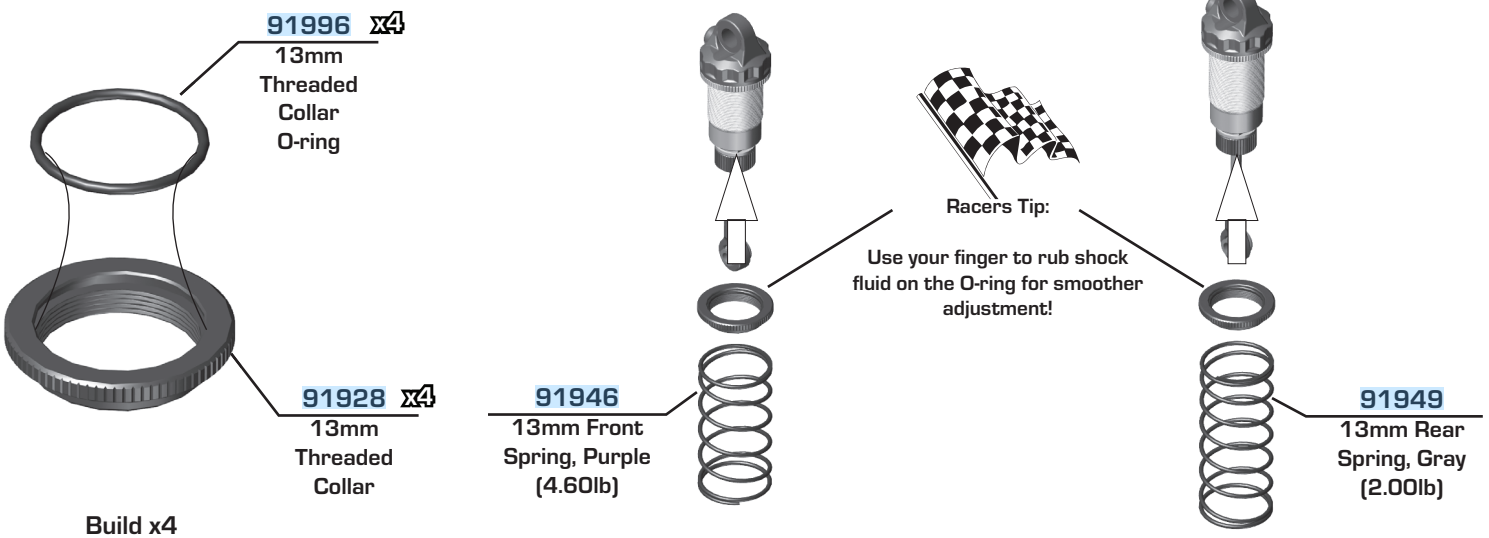

Bag 9 - Step 6

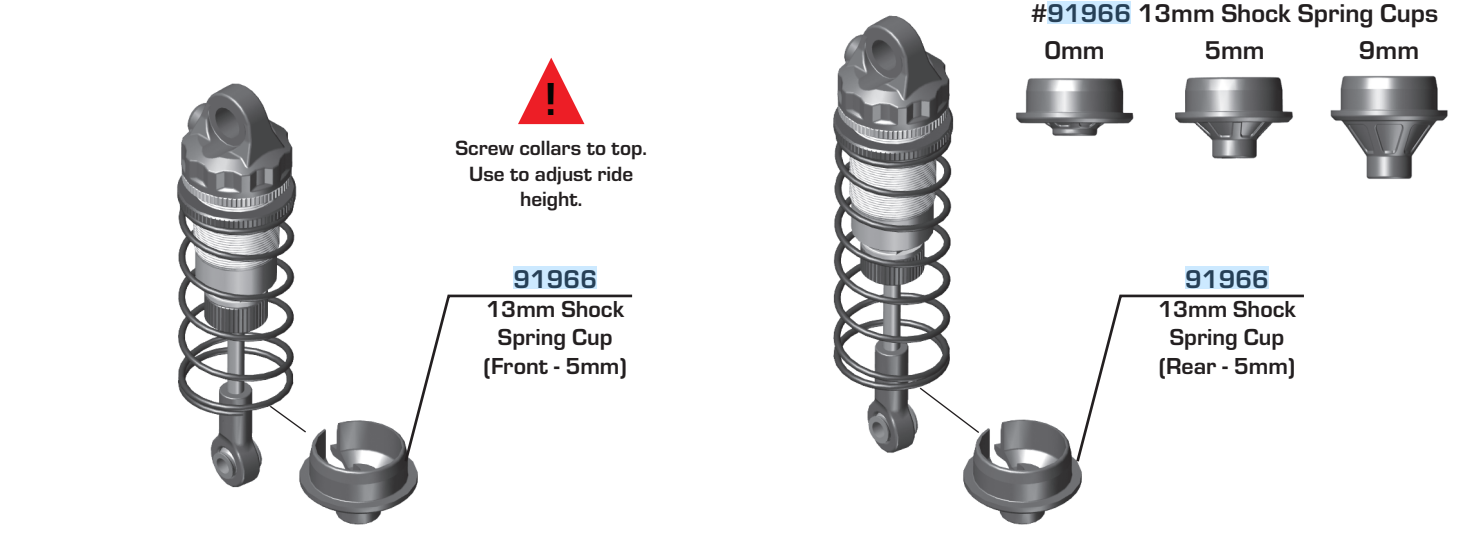

:: Bag 9 - Step 7

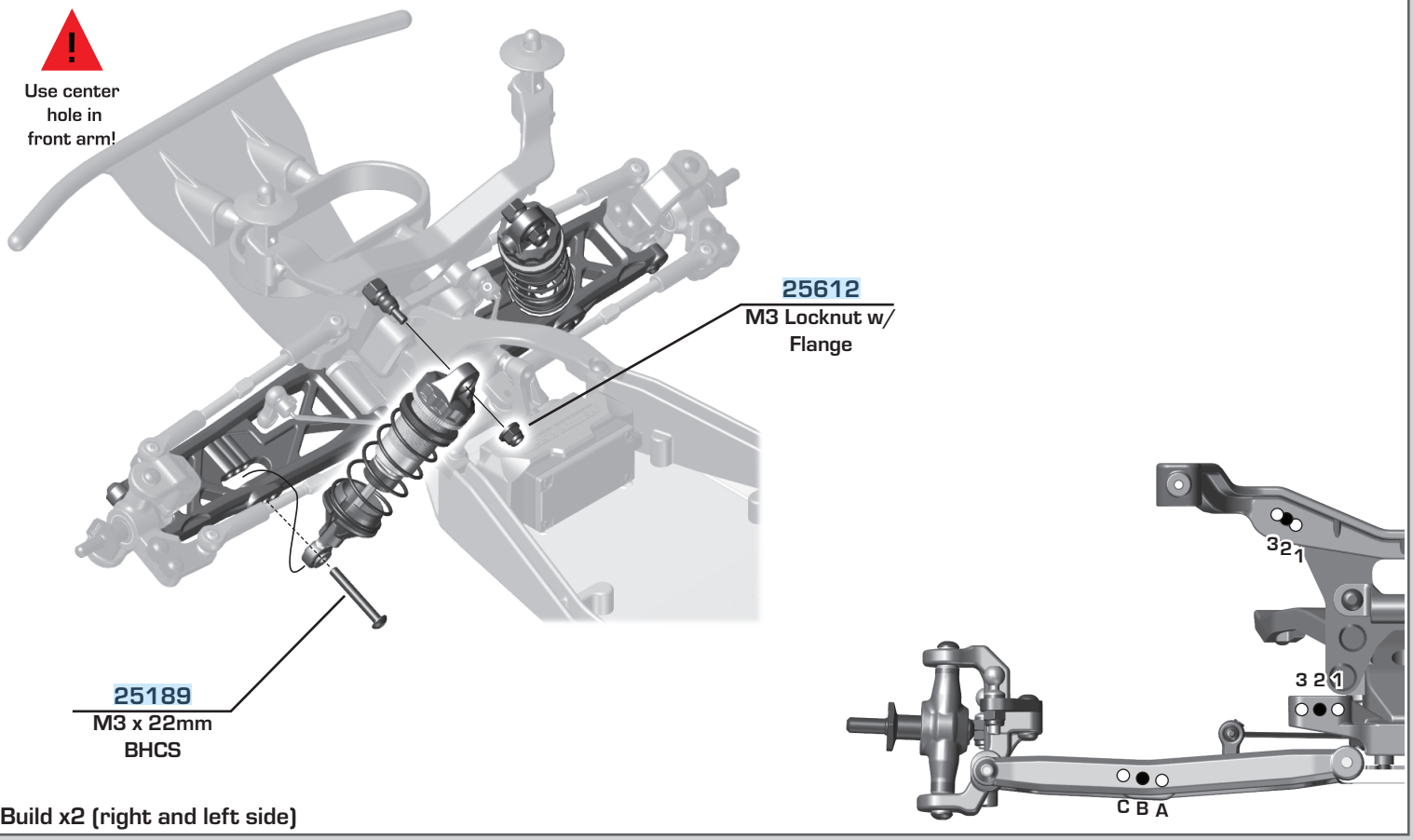

Build x2 (right and left side)

:: Bag 9 - Step 8

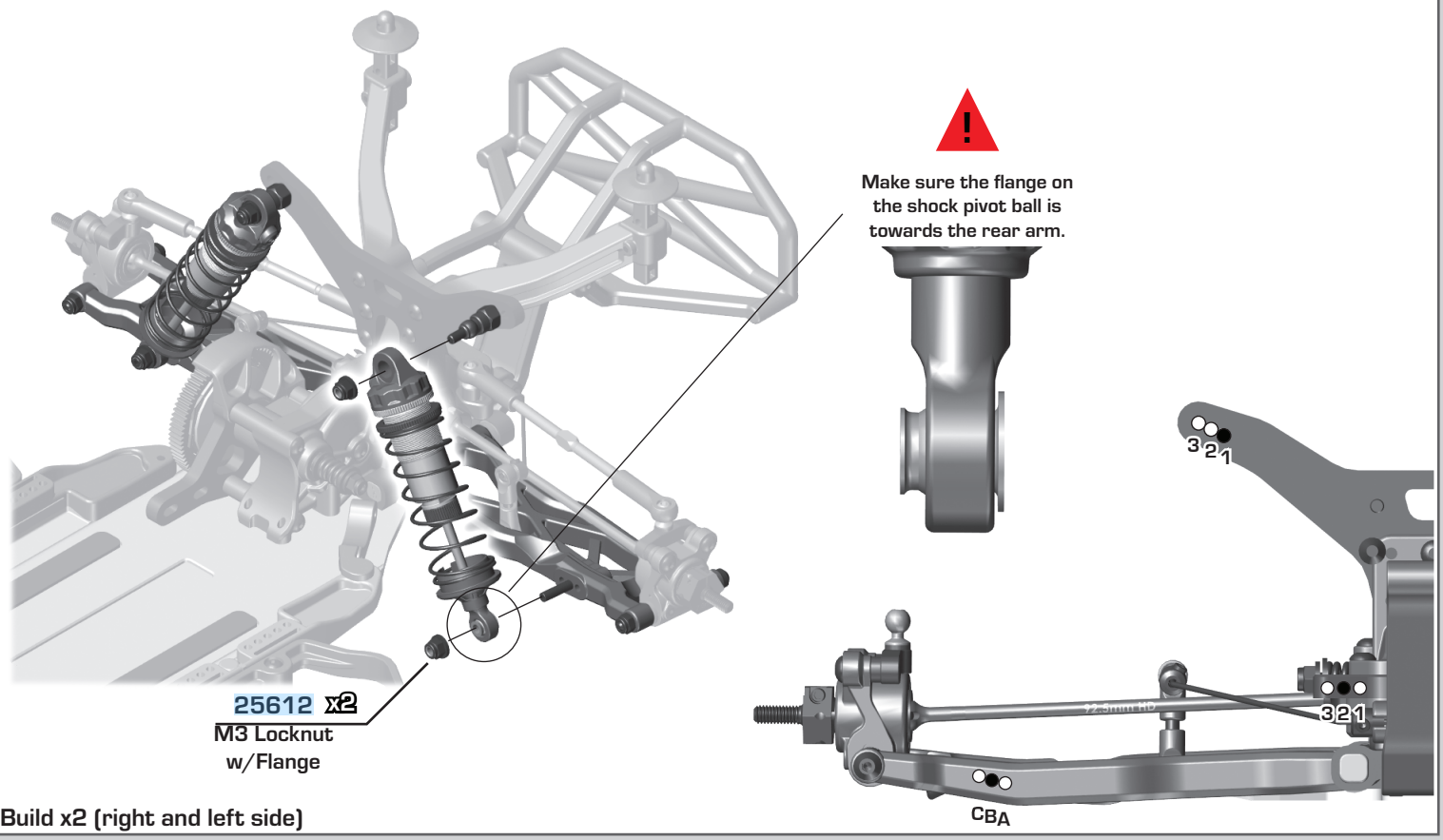

Build x2 (right and left side)

:: Bag 10 - Step 1

See page 23 for gear mesh setting instructions!

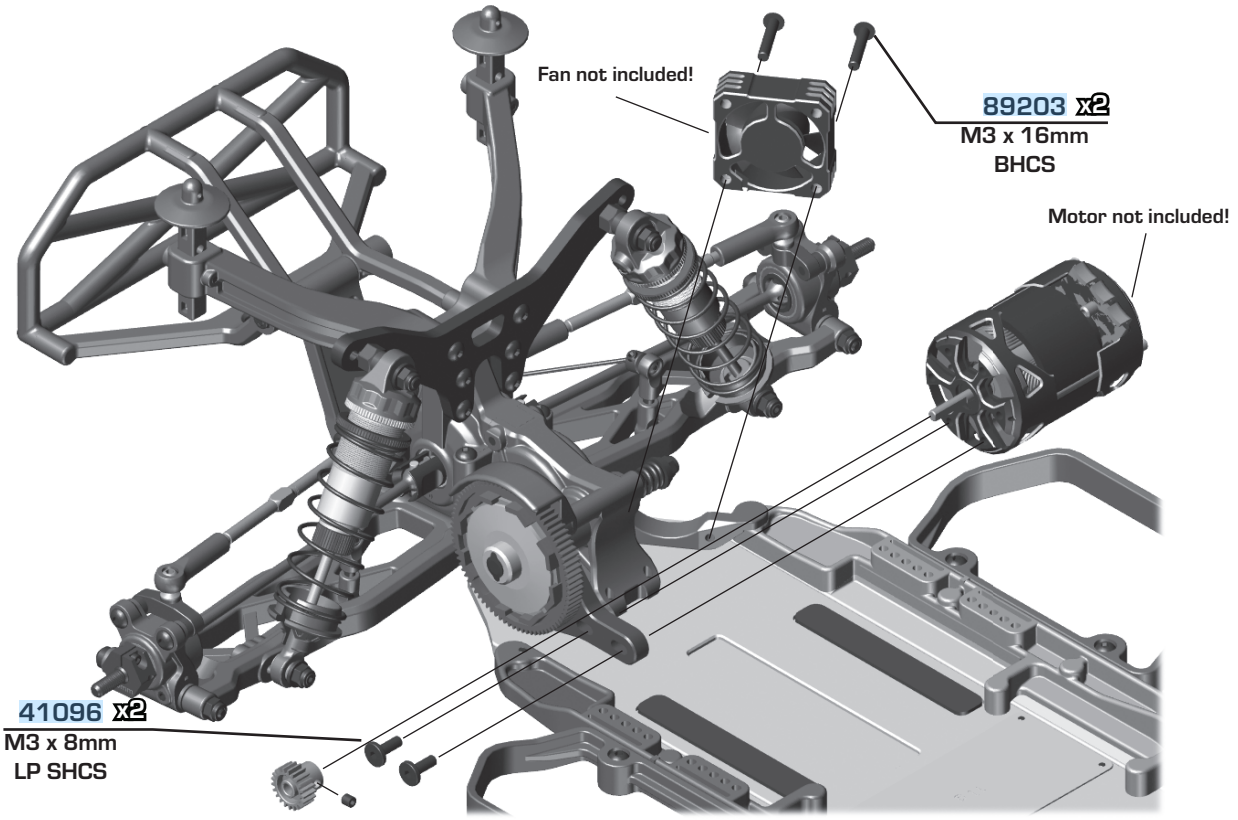

:: Bag 10 - Step 2

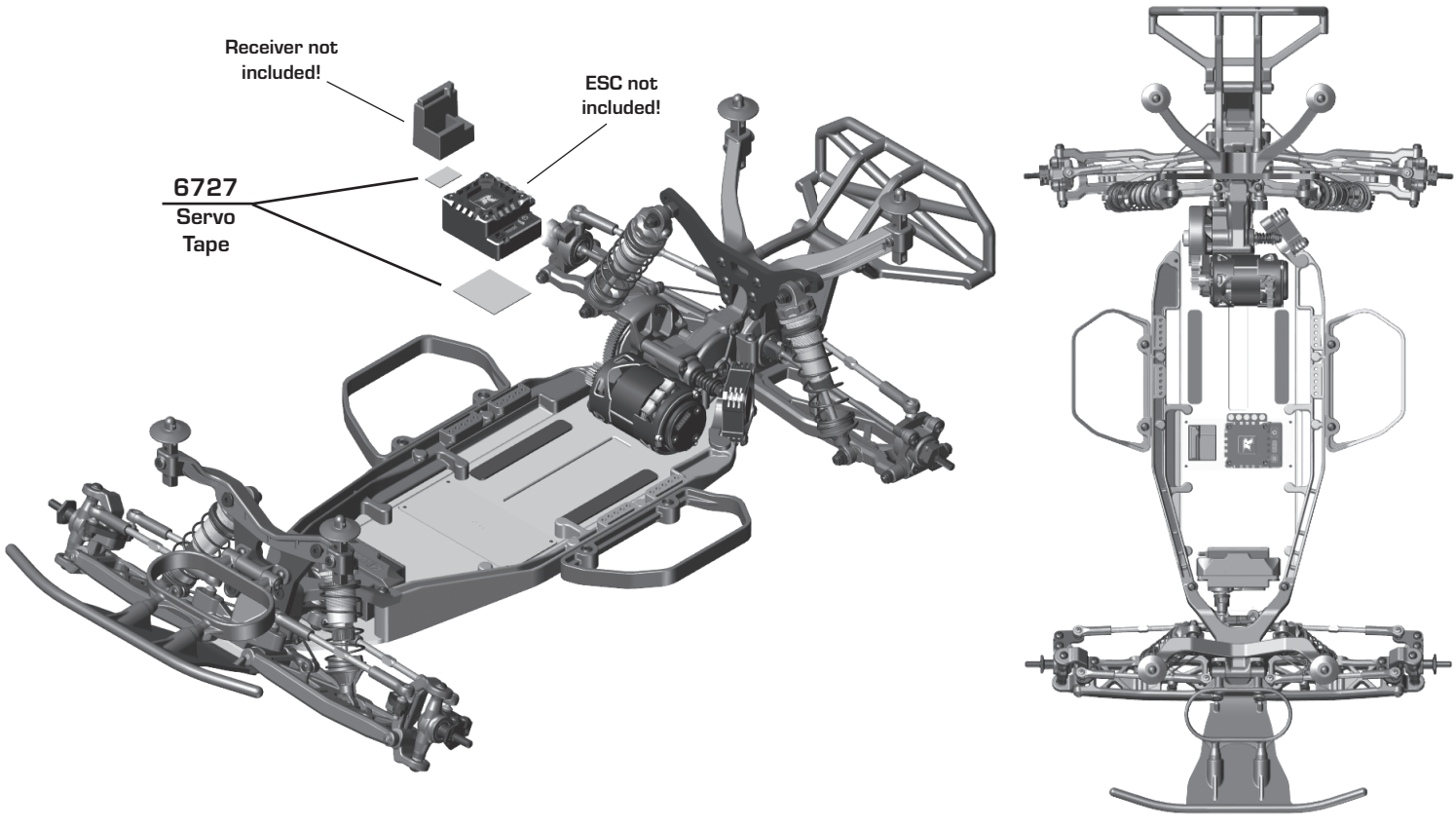

:: Bag 10 - Step 3

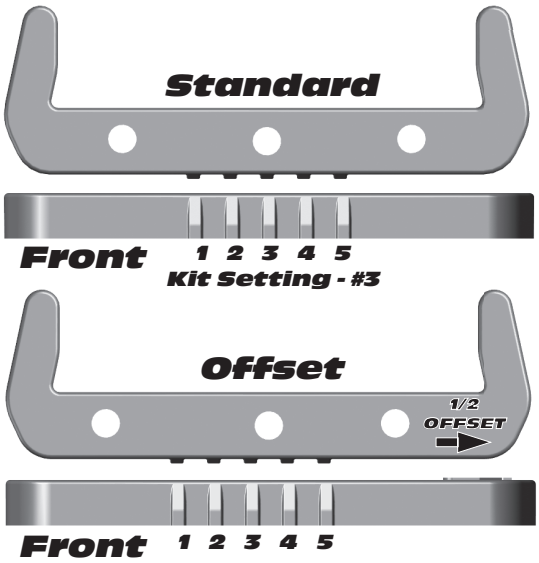

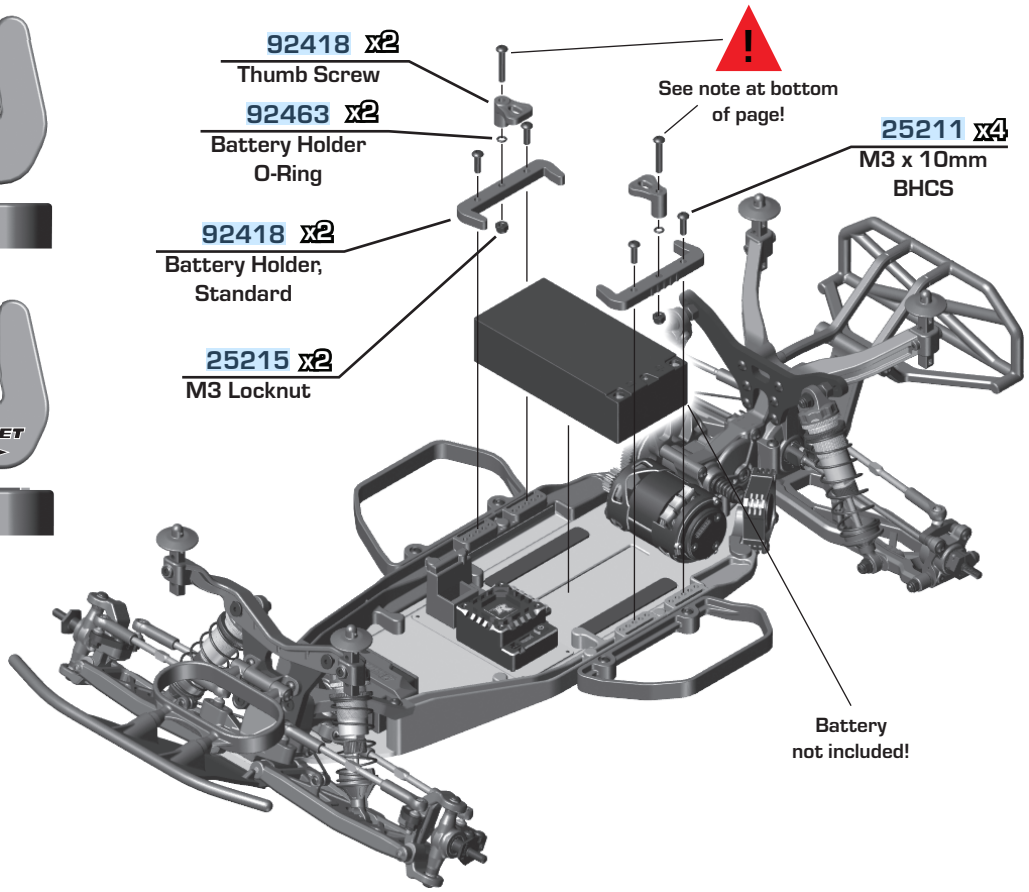

Standard and Low Profile battery thumb screws are included. Shims may need to be added if battery weights are used.
Use M3 x 18mm (#2308) for standard height
Use M3 x 12mm (#89202) LP height

:: Bag 10 - Step 4

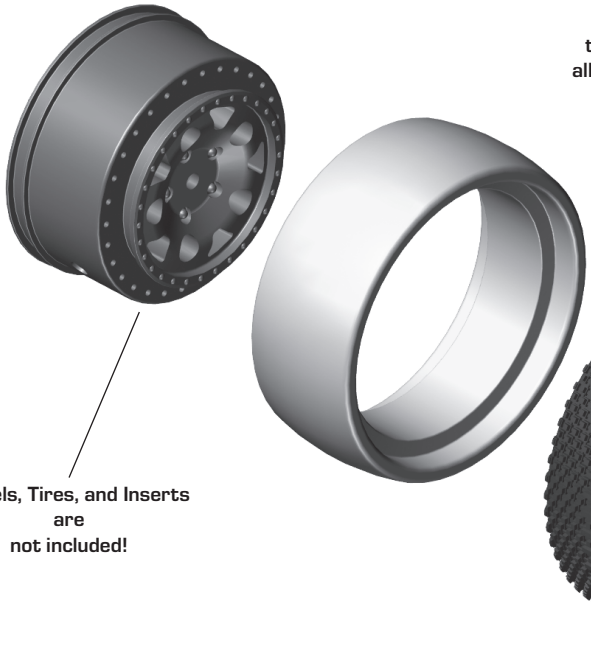

Wheels, Tires, and Inserts are not included!

Carefully apply CA glue (tire adhesive) to the tire bead on the side. Do one side at a time, allowing it to dry before gluing the other side!
CA glue not included!



Build x2 (x2 front and x2 rear)

:: Bag 10 - Step 5

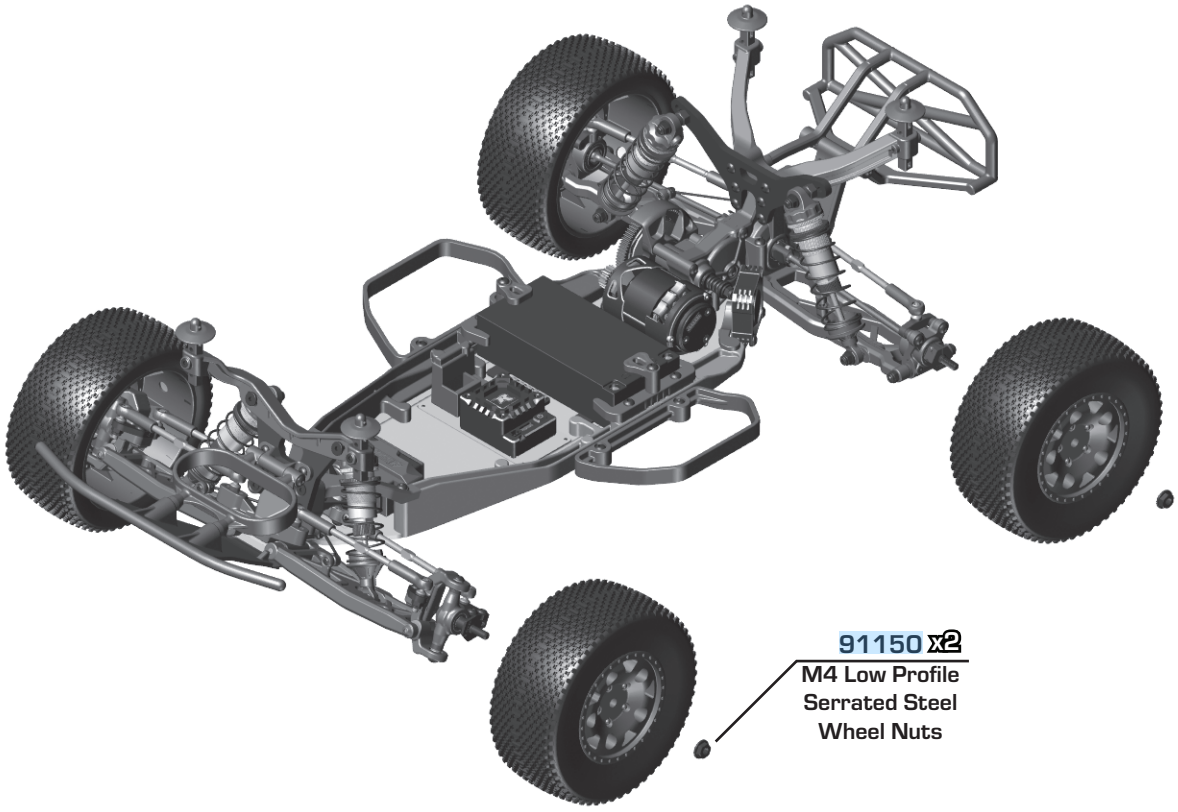

Build 2 (1 left, 1 right)

:: Optional Rear Anti-Roll Bar Build Steps

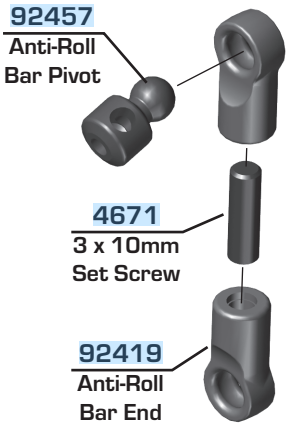

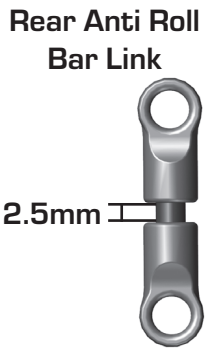

Build 2 (1 left, 1 right)

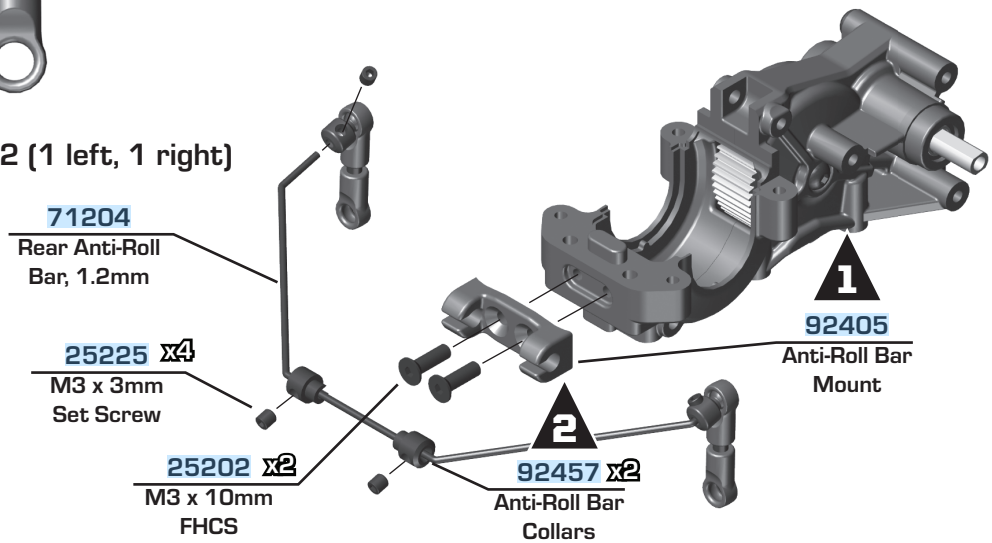

:: Tuning Tips - Painting, Beginners

Painting:

Your Kit requires a clear polycarbonate body. You will need to prep the body before you can paint it.
Wash the INSIDE thoroughly with warm water and liquid detergent (do not use any detergents with scents or added hand lotion ingredients!). Dry the body using a clean, soft, lint-free cloth. Use the supplied window masks to cover the windows from the INSIDE of the body (RC bodies get painted on the inside). Using high quality masking tape, apply tape to the inside of the body to create a design. Spray (use either rattle can or airbrush) the paint on the inside of the body (preferably dark colors first, lighter colors last). NOTE: ONLY use paint that is recommended for (polycarbonate) plastics. If you do not, you can destroy the body! After the paint has completely dried (usually after 24 hours), cut the body along the trim lines. Make sure to drill or use a body reamer to make the holes for the antenna if needed! Use hook and loop tape to secure the body to the side rails of the vehicle.

Tips for Beginners:

Before making any changes to the standard setup, make sure you can get around the track without crashing. Changes to your vehicle will not be beneficial if you can't stay on the track. Your goal is consistent laps. Once you can get around the track consistently, start tuning your vehicle. Make only ONE adjustment at a time, testing it before making another change. If the result of your adjustment is a faster lap, mark the change on the included setup sheet (make adddtional copies of the sheet before writing on it). If your adjustment results in a slower lap, revert back to the previous setup and try another change. When you are satisfied with your vehicle, fill in the setup sheet thoroughly and file it away. Use this as a guide for future track days or conditions. Periodically check all moving suspension parts. Suspension components must be kept clean and move freely without binding to prevent poor and/or inconsistent handling.

Rear Arm Mount Pill Insert Setup:

The aluminum rear arm mounts utilize eccentric pill inserts to make fine adjustments to anti-squat, toe, pin heights, and pin width. Adjustments can be made using the supplied inserts (#92014)

Standard Position

Use this position as a reference when changing pill locations.

Toe: 3°
Anti-squat: 2°
Roll Center: +0
Pivot Width: +0

Arm Mount C



Arm Mount D



Insert Hole Locations



Number indicates degree of change: 0.5°, 1.0°, 0° (center dot)



Hole 0.5° or 0.35mm from center



Hole 1.0° or 0.7mm from center

Possible Insert Locations

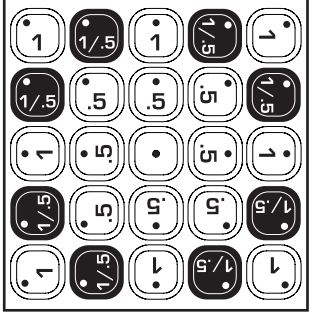

Pin Width

More distance = wider pivot
Less distance = narrow pivot
*Note: For pin width -1.4mm, use 67mm CVA driveshafts

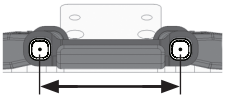

C Mount	D Mount	
		= +1.4mm
		= +0.7mm
		= 0mm
	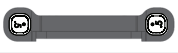	= -0.7mm
	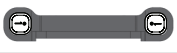	= -1.4mm*

Pin Height

Higher pin = Higher roll center
Lower pin = lower roll center



C Mount	D Mount	
		= +0.7°mm
		= +0.35°mm
		= 0mm
		= -0.35°mm
		= -0.7°mm

Anti-squat Angle

More angle = More anti-squat
Less angle = Less anti-squat
Shown in 1° changes



C Mount	D Mount	
		= 1°
		= 0°
		= -1°
		= 2°
		= 1°
		= 0°
		= 3°
		= 2°
		= 1°

Toe Angle

More angle = More toe in
Less angle = Less toe in
Shown in 1° changes

C Mount	D Mount	
		= 3°
		= 4°
		= 5°
		= 2°
		= 3°
		= 4°
		= 1°
		= 2°
		= 3°

For additional setup tips, please visit our website by using the link or QR code below.

http://bit.ly/B6PillChart

:: Tuning Tips (cont.)

Motor Gearing:

Proper motor gearing will result in maximum performance and run time while reducing the chance of overheating and premature motor failure. The gear ratio chart lists recommended starting gear ratios for the most widely used motor types. Gear ratios will vary depending upon motor brand, wind, and electronic speed control. Consult your motor and electronic speed control manufacturers for more information. Team Associated is not responsible for motor damage due to improper gearing.

SC7 Gear Ratio Chart (Internal Gear Ratio 2.60:1)

Motor	Pinion	Spur	Final Drive Ratio
17.5 Reedy S-Plus Brushless	26	78	7.80:1
13.5 Reedy S-Plus Brushless	25	81	8.42:1
10.5 Reedy 540-M4 Brushless	24	81	8.78:1
9.5 Reedy 540-M4 Brushless	23	81	9.16:1
8.5 Reedy 540-M4 Brushless	22	81	9.57:1
7.5 Reedy 540-M4 Brushless	21	81	10.03:1
6.5 Reedy 540-M4 Brushless	20	81	10.53:1

*78T spur gear not included in kit!

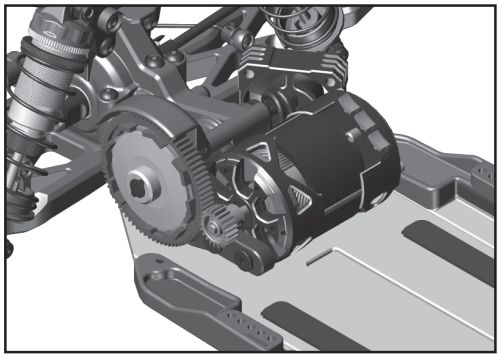

Set The Gear Mesh:

You should be able to rock the spur gear back and forth in the teeth of the pinion gear without making the pinion gear move. If the spur gear mesh is tight, then loosen the #41096 screws (p.19) and move the motor away, then try again.
A gear mesh that is too tight or too loose will reduce power and damage the gear teeth.

Diff Height Adjustment:

The diff height adjustment (p.12) is a good way to tune the car for grip level. On high grip with low ride heights, a higher diff height will be a good option. On lower grip with higher ride heights, a lower diff height will be better.

Slipper Clutch:

The assembly instructions give you a base setting for your clutch. Turn the nut on the shaft so that the end of the top shaft is even with the outside of the nut. At the track, tighten or loosen the nut in 1/8 turn increments until you hear a faint slipping sound for 1-2 feet on takeoffs. Another popular way to set the clutch is to hold both rear tires firmly in place and apply short bursts of throttle. If the clutch is properly set, the front tires should lift slightly up off the surface.

Caster:

Caster describes the angle of the caster block as it leans toward the rear of the vehicle. Positive caster means the kingpin leans rearward at the top. The kit includes three inserts to adjust caster angle at the caster block, 0°, 2.5°, and +5°. The total caster angle is the sum of the kick-up angle and the caster block angle. Standard total caster angle for the B6 is 30°, with 25° kick-up and +5° caster block angle. For less entry steering and more exit steering, try 0° caster block angle.

Front Camber:

Camber describes the angle at which the tire and wheel rides when looked at from the front. Negative camber means that the tire leans inward at the top. A good starting camber setting is -1°. Positive camber, where the top of the tire is leaning out, is not recommended. A camber gauge can be used to more accurately set camber.

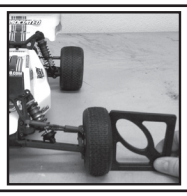

Testing camber with camber gauge

Rear Camber:

Camber describes the angle at which the tire and wheel rides when looked at from the back. Negative camber means that the tire leans inward at the top. A good starting camber setting is -1°. Adding a small amount of positive camber, where the top of the tire is leaning out, will tend to improve straight-line acceleration on loose tracks. A camber gauge can be used to more accurately set camber.

RC10 SC7 TEAM KIT

Driver: Kit Setup | Event: | Qualify: | Main:

Date: | Track: | Finish: | Best Lap Time:

Front Suspension:

Ride Height:	23mm (body on)
Camber:	-1
Toe:	0 Degree
Anti-Roll Bar:	1.4mm
Arm Type:	Kit
Tower Type:	Kit
Wheel Hex:	8.5mm
Steering Block KPI:	4 trail, 0 kpi
Caster Block Insert:	0 ☐ +2.5 ■ +5 ☐
Bulkhead Type:	Aluminum
Kick-Up Angle:	-2.5 ☐ 0 ☐ +2.5 ■
Steering Stop Spacing:	0mm
Caster Block Spacing:	Fwd ■ Back ☐
Notes:	

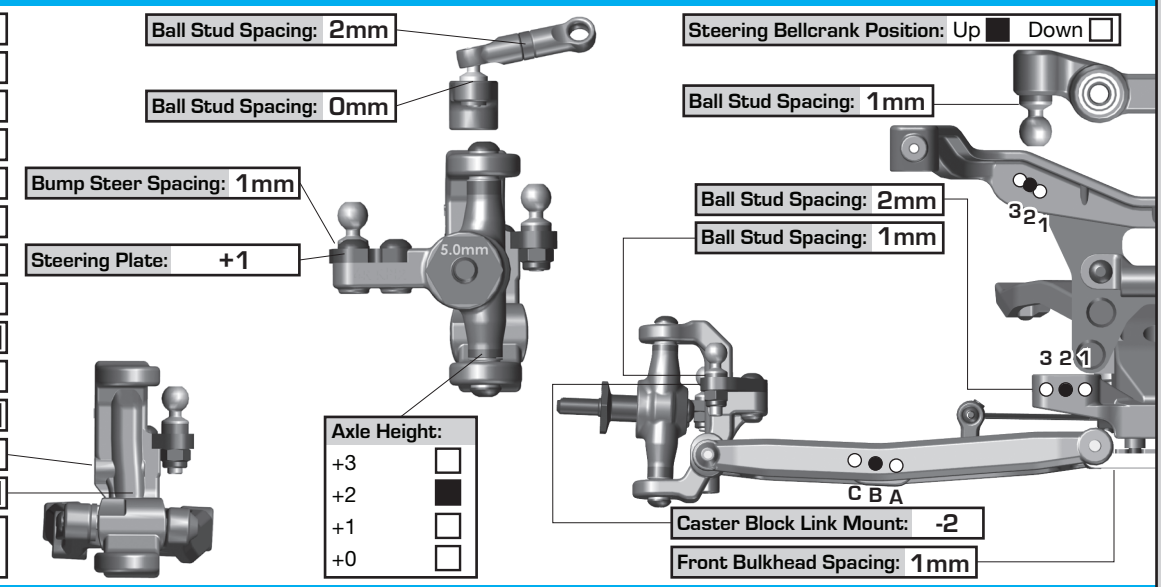

Rear Suspension:

Ride Height:	23mm (body on)
Camber:	-1
Anti-Roll Bar:	Optional - 1.2mm
Arm Type:	Kit
Tower Type:	Kit
Arm Spacing:	Fwd ☐ Mid ■ Back ☐
Wheel Hex:	7mm
Hub Type:	Std ■ HRC ☐
Hub Spacing:	Fwd ☐ Mid ■ Back ☐
Drive Shaft:	CVA's ■ Universals ☐
Notes:	

C Mount: Aluminum ■ Steel ☐

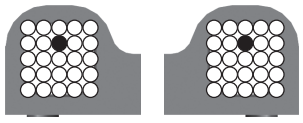

D Mount: Aluminum ■ Steel ☐

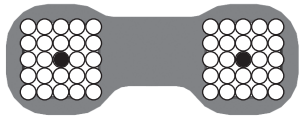

Axle Height:		
▼0	3▲	+3
▼1	2▲	+2
▲1	2▼	+1
▲0	3▼	+0

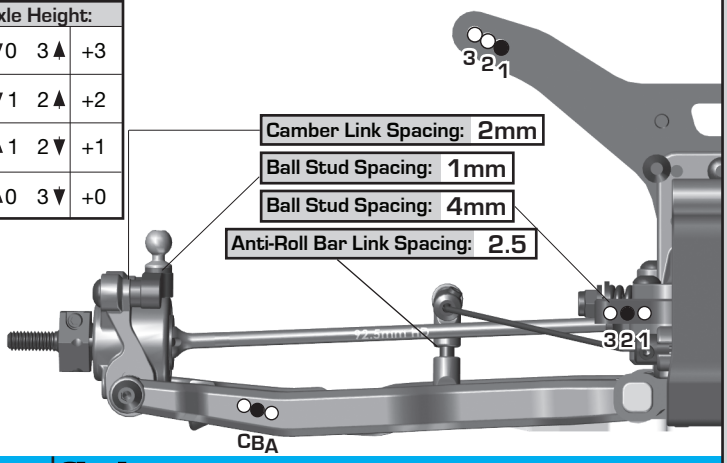

Electronics:

Radio:	Servo:
EPA:	Throttle: % Brake: %
ESC:	
ESC Settings:	
Motor / Wind:	Timing:
Pinion:	Spur:
Battery Mount:	Std ■ Offset ☐
	Back 1 ☐ 2 ☐ 3 ■ 4 ☐ 5 ☐ Forward
Battery:	Weight:
Notes:	

Drivetrain:

Differential:	Ball Diff: ■
Height: 3	Gear Diff: ☐
Diff Setting:	
Notes:	

Slipper Clutch:

Type:	Standard
# of Pads:	2 x 19mm
Setting:	
Notes:	

Shocks:

	Front	Rear
Piston:	2 x 1.7	2 x 1.9
Thickness:	2.5	2.5
Fluid:	30	30
Spring:	Purple	Gray
Limiters:	Int: ___ Ext: ___	Int: ___ Ext: ___
Stroke:	24.5	30
Eyelet:	0	0
Cup Offset:	0 ☐ +5 ■ +9 ☐	0 ☐ +5 ■ +9 ☐



Kashima Bodies: ☐ Chrome Shafts: ☐ Machined Spacers: ☐

Notes:

Track Info:

Size:	
Surface:	
Traction:	
Moisture:	
Condition:	
Temperature:	
Notes:	

Tires:

Front Tires:	
Front Compound:	
Front Insert:	
Rear Tires:	
Rear Compound:	
Rear Insert:	
Wheel (F/R):	
Notes:	

Body, Weight:

Body:	
Chassis Length:	0
Servo Weights:	None
Electronic Weights:	Aluminum
Total Vehicle Weight:	

Vehicle Comments:

Notes:

:: For more setups, visit https://www.associatedelectrics.com/teamassociated/manuals_and_setup_sheets/

RC10 SC7 TEAM KIT

Driver: _____ Event: _____ Qualify: _____ Main: _____

Date: _____ Track: _____ Finish: _____ Best Lap Time: _____

Front Suspension:

Ride Height:
Camber:
Toe:
Anti-Roll Bar:
Arm Type:
Tower Type:
Wheel Hex:
Steering Block KPI:
Caster Block Insert: 0 ☐ +2.5 ☐ +5 ☐
Bulkhead Type:
Kick-Up Angle: -2.5 ☐ 0 ☐ +2.5 ☐
Steering Stop Spacing:
Caster Block Spacing: Fwd ☐ Back ☐
Notes:

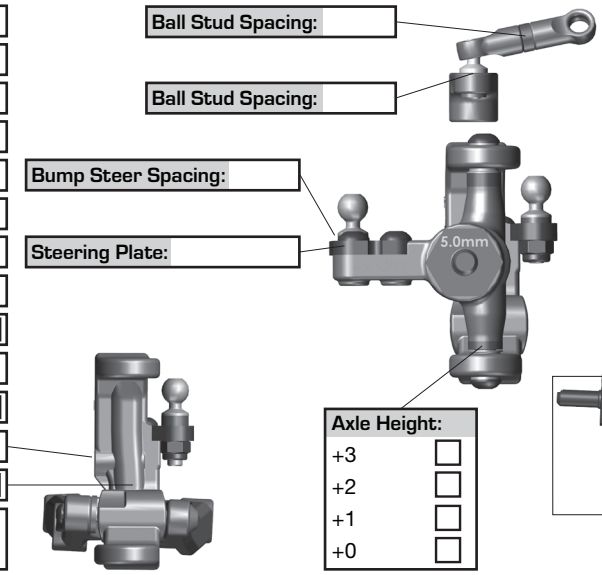

Axle Height:
+3 ☐
+2 ☐
+1 ☐
+0 ☐

Steering Bellcrank Position: Up ☐ Down ☐
Ball Stud Spacing:
Ball Stud Spacing:
Ball Stud Spacing:
3 2 1
3 2 1
C B A
Caster Block Link Mount:
Front Bulkhead Spacing:

Rear Suspension:

Ride Height:
Camber:
Anti-Roll Bar:
Arm Type:
Tower Type:
Arm Spacing: Fwd ☐ Mid ☐ Back ☐
Wheel Hex:
Hub Type: Std ☐ HRC ☐ _____
Hub Spacing: Fwd ☐ Mid ☐ Back ☐
Drive Shaft: CVA's ☐ Universals ☐
Notes:

C Mount:
Aluminum ☐ Steel ☐

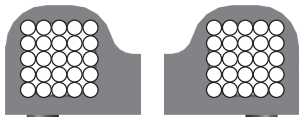

D Mount:
Aluminum ☐ Steel ☐

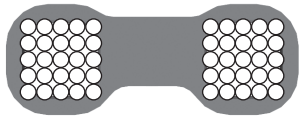

Axle Height:

▼0	3▲	+3
▼1	2▲	+2
▲1	2▼	+1
▲0	3▼	+0

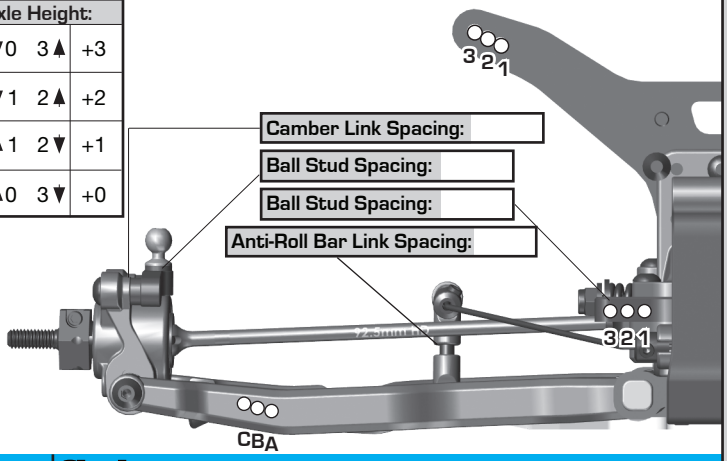

Electronics:

Radio: Servo:
EPA: Throttle: % Brake: %
ESC:
ESC Settings:
Motor / Wind: Timing:
Pinion: Spur:
Battery Mount: Std ☐ Offset ☐



Back 1 ☐ 2 ☐ 3 ☐ 4 ☐ 5 ☐ Forward
Battery: Weight:
Notes:

Drivetrain:

Differential: Ball Diff: ☐
Height: _____ Gear Diff: ☐
Diff Setting: _____
Notes:

Slipper Clutch:

Type:
# of Pads:
Setting:
Notes:

Shocks:

	Front	Rear
Piston:		
Thickness:		
Fluid:		
Spring:		
Limiters:	Int: ____ Ext: ____	Int: ____ Ext: ____
Stroke:		
Eyelet:		
Cup Offset:	0 ☐ +5 ☐ +9 ☐	0 ☐ +5 ☐ +9 ☐



Kashima Bodies: ☐ Chrome Shafts: ☐ Machined Spacers: ☐
Notes:

Track Info:

Size:
Surface:
Traction:
Moisture:
Condition:
Temperature:
Notes:

Tires:

Front Tires:
Front Compound:
Front Insert:
Rear Tires:
Rear Compound:
Rear Insert:
Wheel (F/R):
Notes:

Body, Weight:

Body: _____
Chassis Length:
Servo Weights:
Electronic Weights:
Total Vehicle Weight:

Vehicle Comments:

Notes: _____

:: For more setups, visit https://www.associatedelectrics.com/teamassociated/manuals_and_setup_sheets/

ASSOCIATED ELECTRICS
Since 1964

Associated Electrics, Inc.
21062 Bake Parkway Lake Forest, CA 92630 USA

call: (949) 544-7500 - fax: (949) 544-7501

Check out the following web sites for all of our kits, current products, new releases, setup help, tips, and racing info!

www.AssociatedElectrics.com

FOLLOW US ON SOCIAL MEDIA

TeamAssociated ReedyPower ElementRC FactoryTeam51	@TeamAssociatedRC @ReedyPower @Element_RC @FactoryTeam_RC	@Team_Associated @ReedyPower	@Associated_Electrics	TeamAssociatedRC ElementRC	TeamAssociated Reedy Element-rc