CAMPBELLTOWN HOBBIES

Your R/C Specialists

02 4626 8300

Click on the highlighted part number to open a link to that part on the Campbelltown Hobbies website. Parts highlighted blue are coming soon.

TLR™

TEAM LOSI RACING

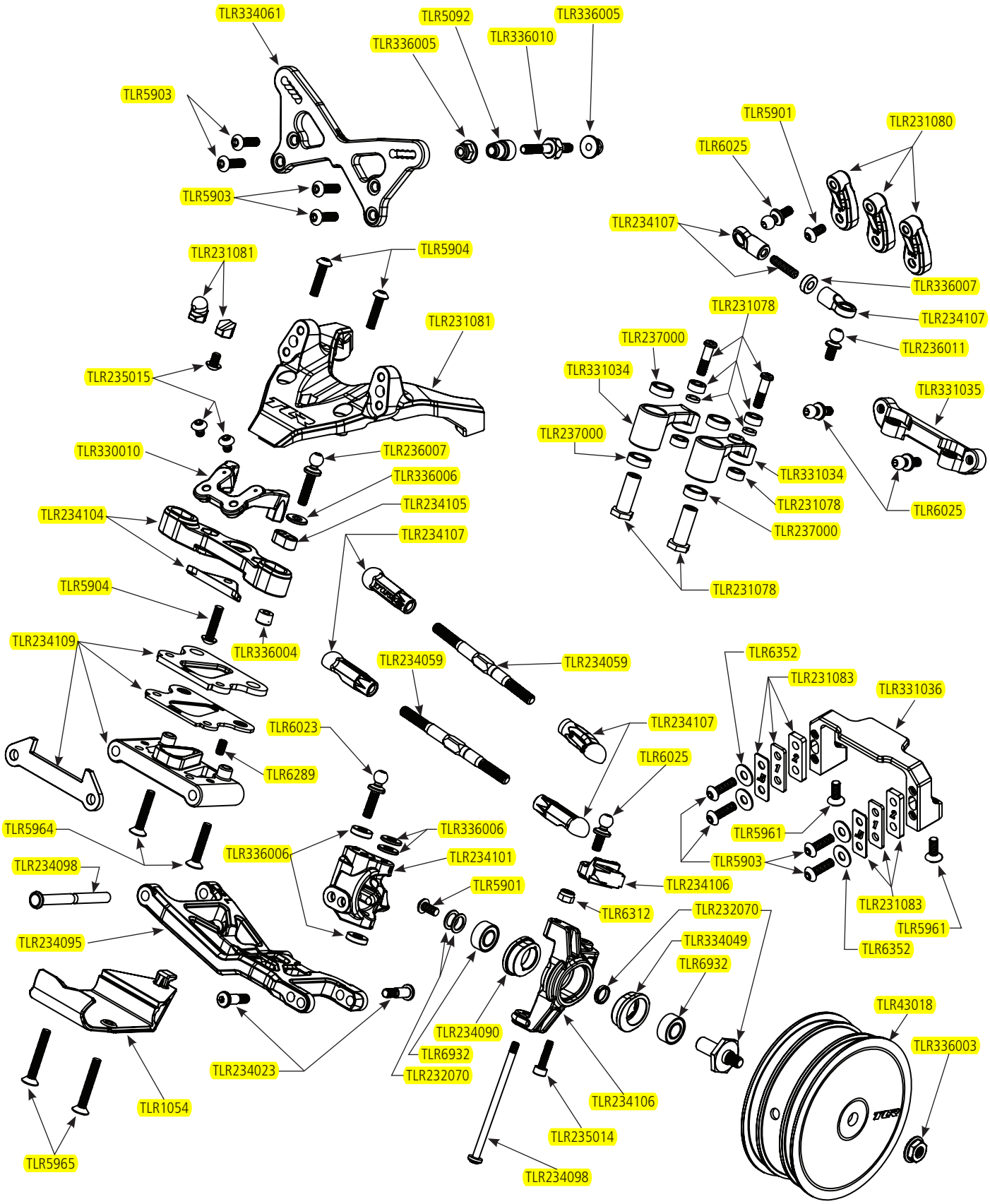
TLR334061
TLR5092
TLR336005
TLR336005
TLR336010
TLR5903
TLR5903
TLR5901
TLR231080
TLR6025
TLR234107
TLR231081
TLR5904
TLR336007
TLR231078
TLR231081
TLR234107
TLR237000
TLR236011
TLR331034
TLR235015
TLR331035
TLR237000
TLR330010
TLR236007
TLR331034
TLR336006
TLR234105
TLR231078
TLR6025
TLR234104
TLR237000
TLR234107
TLR5904
TLR231078
TLR234109
TLR336004
TLR234059
TLR234059
TLR6352
TLR231083
TLR331036
TLR234107
TLR6023
TLR6025
TLR6289
TLR5964
TLR336006
TLR5961
TLR336006
TLR234101
TLR5903
TLR234098
TLR5901
TLR234106
TLR6312
TLR232070
TLR231083
TLR5961
TLR234095
TLR334049
TLR6352
TLR6932
TLR43018
TLR234090
TLR336003
TLR6932
TLR234023
TLR232070
TLR234106
TLR1054
TLR235014
TLR5965
TLR234098

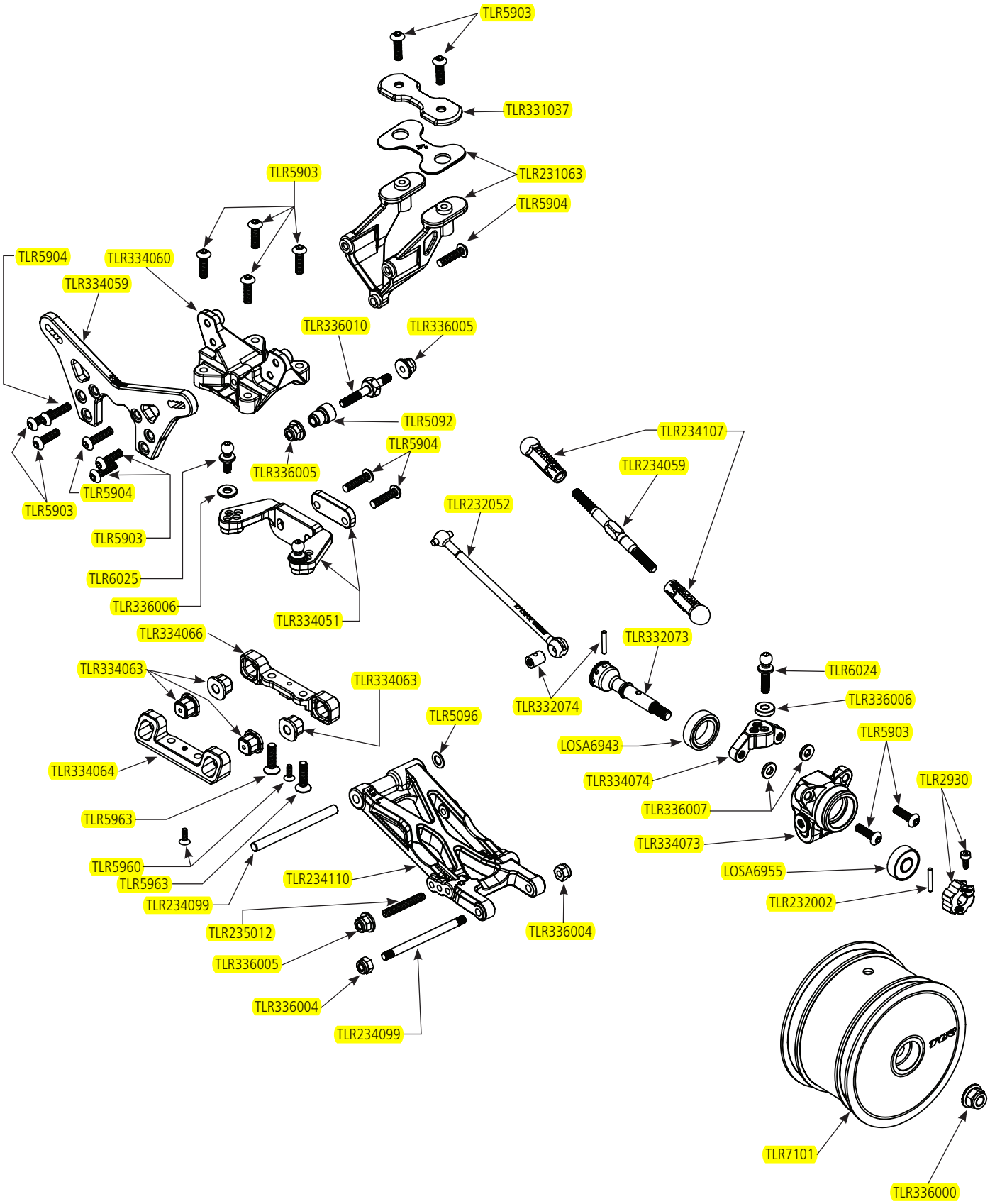
TLR5903
TLR331037
TLR5903
TLR231063
TLR5904
TLR5904
TLR334060
TLR334059
TLR336010
TLR336005
TLR5092
TLR5904
TLR336005
TLR5904
TLR5903
TLR5903
TLR6025
TLR336006
TLR334051
TLR234107
TLR234059
TLR232052
TLR334066
TLR332073
TLR334063
TLR334063
TLR332074
TLR6024
TLR336006
TLR5096
LOSA6943
TLR5903
TLR334064
TLR334074
TLR2930
TLR336007
TLR5963
TLR334073
TLR5960
TLR5963
TLR234110
LOSA6955
TLR234099
TLR232002
TLR235012
TLR336004
TLR336005
TLR336004
TLR234099
TLR7101
TLR336000

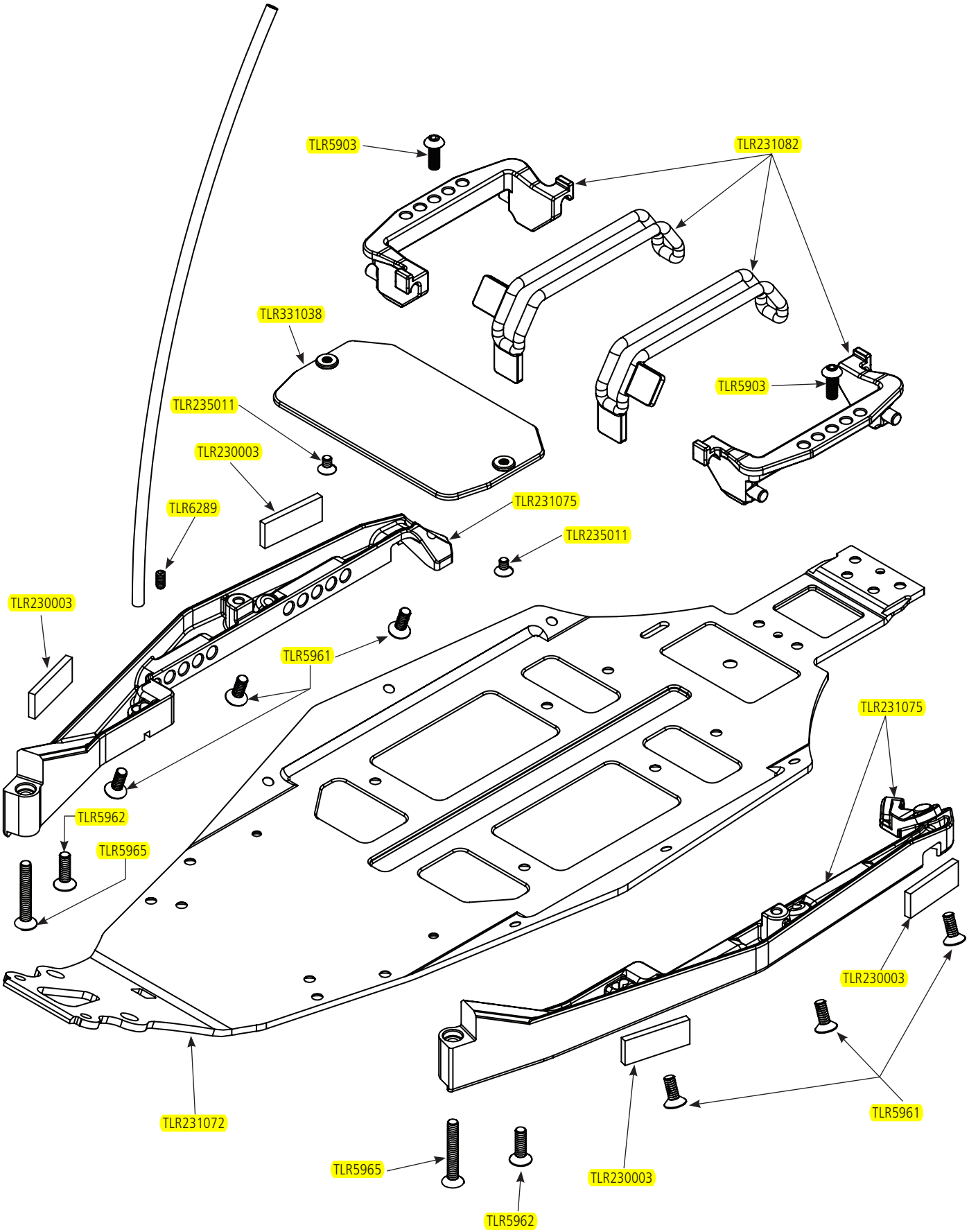
TLR5903
TLR231082
TLR331038
TLR5903
TLR235011
TLR230003
TLR6289
TLR231075
TLR235011
TLR230003
TLR5961
TLR231075
TLR5962
TLR5965
TLR230003
TLR5961
TLR231072
TLR5965
TLR230003
TLR5962

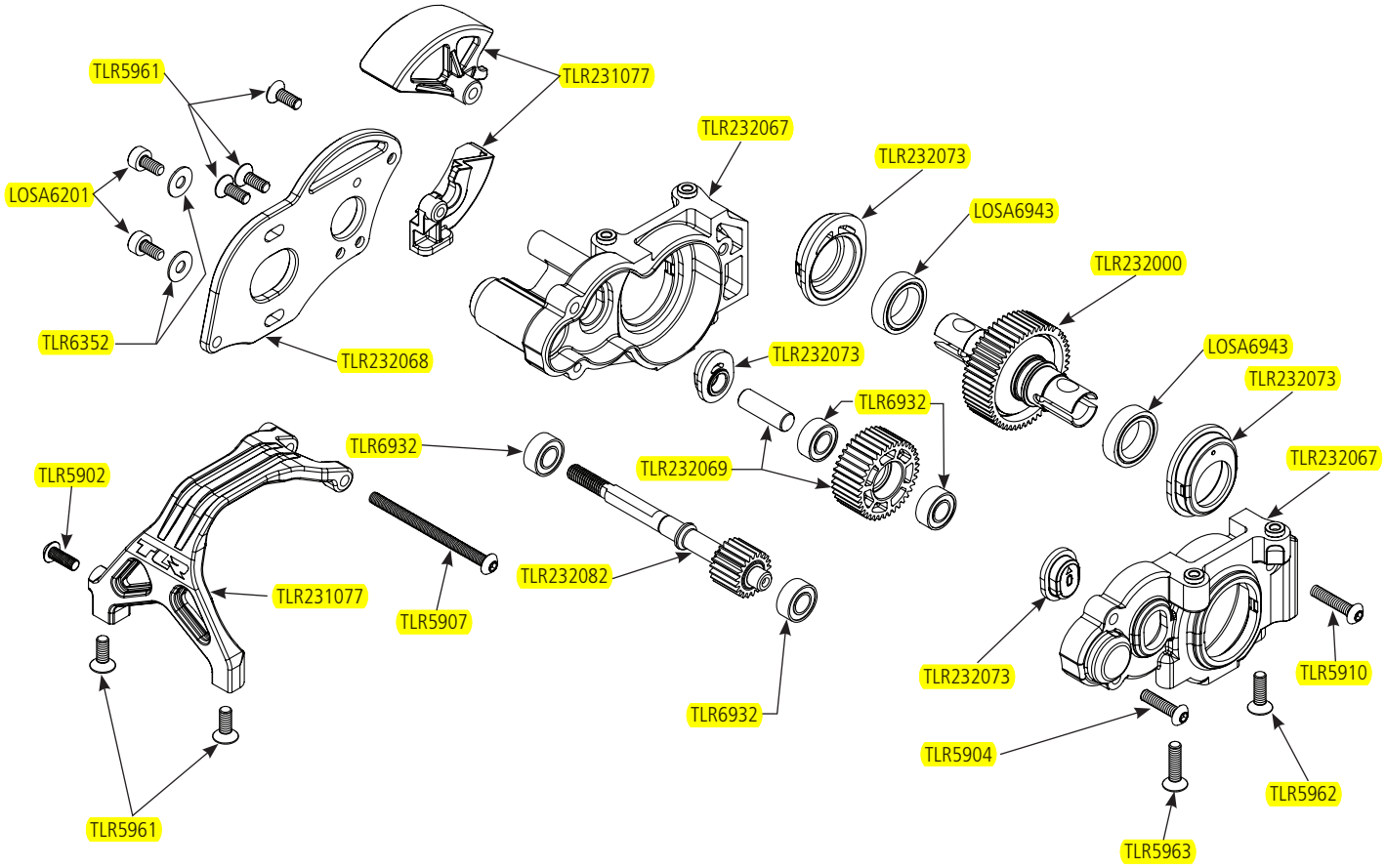
TLR5961
TLR231077
TLR232067
TLR232073
LOSA6943
TLR232000
LOSA6201
TLR6352
TLR232068
TLR232073
LOSA6943
TLR232073
TLR6932
TLR6932
TLR232069
TLR232067
TLR5902
TLR232082
TLR231077
TLR5907
TLR232073
TLR5910
TLR6932
TLR5904
TLR5962
TLR5963
TLR5961

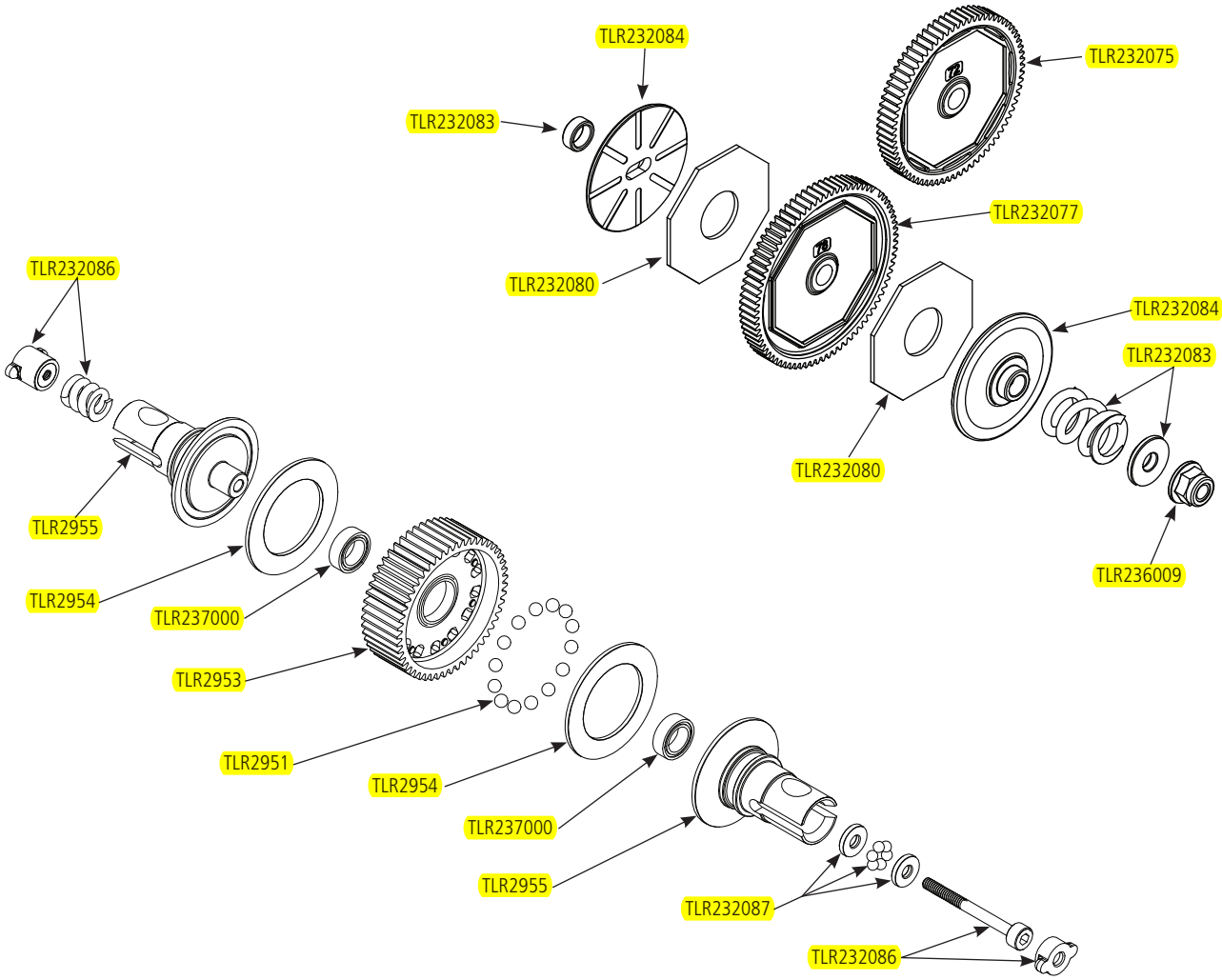
TLR232084
TLR232075
TLR232083
TLR232077
TLR232086
TLR232080
TLR232084
TLR232083
TLR232080
TLR2955
TLR236009
TLR2954
TLR237000
TLR2953
TLR2951
TLR2954
TLR237000
TLR2955
TLR232087
TLR232086

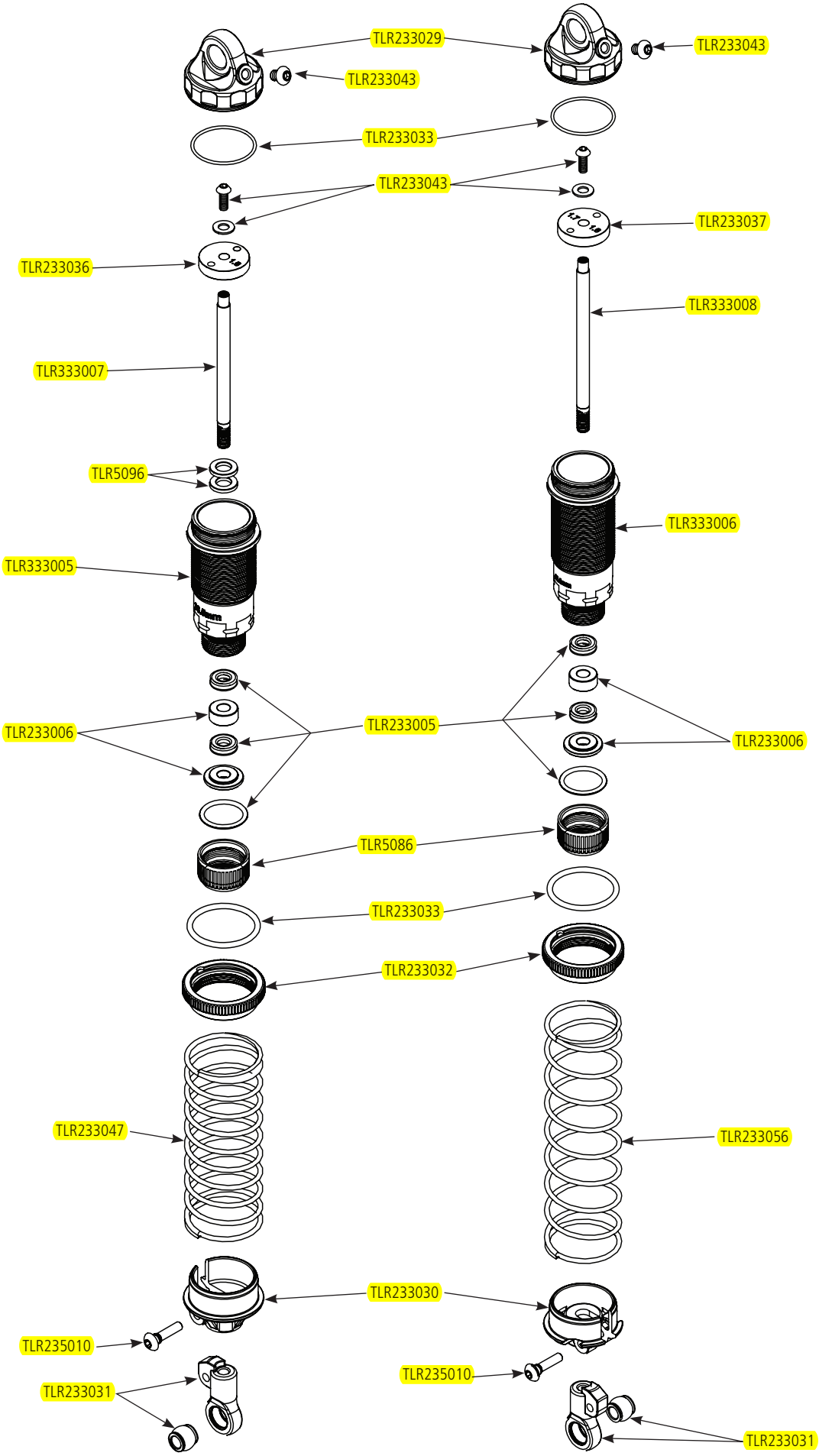
TLR233029
TLR233043
TLR233043
TLR233033
TLR233043
TLR233037
TLR233036
TLR333008
TLR333007
TLR5096
TLR333006
TLR333005
TLR233006
TLR233005
TLR233006
TLR5086
TLR233033
TLR233032
TLR233047
TLR233056
TLR233030
TLR235010
TLR235010
TLR233031
TLR233031